aerospace
climate control
electromechanical
filtration
fluid & gas handling
hydraulics
pneumatics
process control
sealing & shielding

Parker Global Air Preparation System

Catalogue PDE2676TCUK September 2015

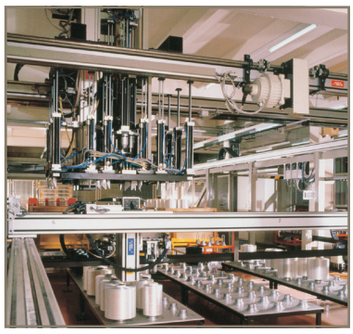

Parker

ENGINEERING YOUR SUCCESS.

PDE2676TCUK_Parker_Global_Air_Preparation_System_V4.indd 1 02/09/2015 14:40:29

DECLARATION OF COMPLIANCE (ROHS)

European Directive 2011/65/EU – RoHS (Restriction us of certain Hazardous Substances in electrical and electronic equipment), restricts the use of the 6 substances in the manufacture of specified electrical equipment.

Lead: Product containing lead and its compound (except for applications of lead as an alloying element by weight in steel up to 0.35%, in aluminium up to 0.4% and in copper alloys up to 4% and in circuit board solder) must not exceed 0.1% by weight

Mercury: The concentration level must not exceed 0.1% by volume

Cadmium: The concentration level must not exceed 0.01% by volume

Hexavalent Chromiou:
This is a corrosive protective finish used on our product line. Where this finish is utilized the Chromate solution is Hexavalent (Chrome 6) free.

Polybrominated Biphenyls (PBB):
The concentration level must not exceed 0.1% by weight. This substance is not know to be in any of our products.

Polybrominated Diphenyl Esters (PBDE):
The concentration level must not exceed 0.1% by weight. This substance is not know to be in any of our products.

Global Air Preparation products supplied by Parker Hannifin have been designed and manufactured in accordance with “sound engineering practice”, as defined by Article 3 of Pressure Equipment Directive 97/23/EC.

Global Air Preparation product range is in compliance with REACH to ensure continued compliance additions to the list of SVHC (Substance of Very High Concern) are reviewed periodically.

Global Air Preparation product range has been third party Shock & Vibration tested independently in accordance to EN 61373 : 1999, Category 2

ATEX

Following Ignition Hazard Assessments performed on the non-electrical Global Air Preparation products they are in accordance with the requirements of EN 13463-1:2009, it was considered that the equipment does not contain its own source of ignition, and therefore is not within the scope of directive 94/9/EC.

The products can be used in a Group II Category 2 environment assuming that the ATEX Directive and the following conditions are complied with:

- Installation and maintenance of the product must be undertaken by qualified personnel.
- Do not mount the products in an area where impact may occur.
- Filters must be used to limit the introduction of particles and to capture particles generated in service.
- Supply air quality must be within ISO 8573-1:2010 Class 1.4.2.
- Maximum working temperature to be as stated on product label.
- WARNING – pulsating pressure and/or a closed circuit can generate heat.
- Deposits of dust on the product must not exceed 5mm thickness. Refer to technical file for surface areas of plastics. The unit must be earthed via the compressed air supply line.
- The unit must not come into contact with liquid solvents, acids or alkalis Refer to technical file for chemicals known to be incompatible. Product cleaning must be undertaken using a method complying with the specifications of the ATEX zone, preferably by using mild soap and water or antistatic products.
- Regulators, Filter Regulators: Do not use Regulators or Filter Regulators within systems that can create vibration within the Regulator / Filter Regulator unit.
- Solenoid Operated Valves: Are suitable for use in an ATEX environment, (Group II Category 2) providing ATEX approved solenoids are fitted.
- Technical file available on request.

Global Air Preparation product range has been designed and tested in accordance with ISO flow testing, envelope integrity, and catalog data presented.

- Filters – ISO 5782-1 & ISO 5782-2: 1997
- Regulators- ISO 6953-1 & ISO 6953-2: 2000
- Lubricators- ISO 6301-1 & ISO 6301-2: 2009

WARNING

FAILURE OR IMPROPER SELECTION OR IMPROPER USE OF THE PRODUCTS AND/OR SYSTEMS DESCRIBED HEREIN OR RELATED ITEMS CAN CAUSE DEATH, PERSONAL INJURY AND PROPERTY DAMAGE.

This document and other information from Parker Hannifin Corporation, its subsidiaries and authorized distributors provide product and/or system options for further investigation by users having technical expertise. It is important that you analyze all aspects of your application including consequences of any failure, and review the information concerning the product or system in the current product catalog. Due to the variety of operating conditions and applications for these products or systems, the user, through its own analysis and testing, is solely responsible for making the final selection of the products and systems and assuring that all performance, safety and warning requirements of the application are met.

The products described herein, including without limitation, product features, specifications, designs, availability and pricing, are subject to change by Parker Hannifin Corporation and its subsidiaries at any time without notice.

Offer of Sale

The items described in this document are hereby offered for sale by Parker Hannifin Corporation, its subsidiaries or its authorized distributors. This offer and its acceptance are governed by the provisions stated on the separate page of this document entitled “Offer of Sale”.

© Copyright 2014, 2012, 2010 Parker Hannifin Corporation. All Rights Reserved

Introduction 4-13
Atex Declaration 14
Shock & Vibration 15
Combinations
- P31 Mini Series 16
- P32 Compact Series 17
- P33 Standard Series 18
- Dimensions 19

Filters
- P31 Mini Series 20-21
- P32 Compact Series 22-23
- P33 Standard Series 24-25

Coalescing & Adsorber Filters
- P31 Mini Series 26-27
- P32 Compact Series 28-29
- P33 Standard Series 30-31

Regulators
- P31 Mini Series 32-33
- P31 Mini Common Port Regulator Series 34-35
- P32 Compact Series 36-37
- P32 Compact Semi-Precision Regulator Series 38-39
- P32 Compact Common Port Regulator Series 40-41
- P33 Standard Series 42-43

Filter / Regulators
- P31 Mini Series 44-45
- P32 Compact Series 46-47
- P32 Compact Semi-Precision Series 48-49
- P33 Standard Series 50-51

Lubricators
- P31 Mini Series 52-53
- P32 Compact Series 54-55
- P33 Standard Series 56-57

Proportional Regulators
- P31 Mini Series & P32 Compact Series 58-67

Dump Valve 68-69
Soft Start Valve 70-71
Combined Soft Start / Dump Valve 72-73
Solenoid Operators 74-75
Combined Soft Start / Dump Valve Machine Directive - EN ISO 13849-1 76
Global Products Fitted with Pressure Sensor 77
Redundant Safety Exhaust Valve 78-81
Ball Valve / Lockout Valve 82
Manifold Blocks 83
Pressure Sensors 84-85
Kits & Accessories
- P31 Mini Series 86
- P32 Compact Series 87
- P33 Standard Series 88
- Kits 89-91
- Pressure Switch PPS1 92-93

Safety Guide 94-95

Parker Global Air Preparation System

Global.
Modular.

Performance you need,
wherever *you need it.*

Full featured particulate and coalescing filters, regulators, filter/regulators, and lubricators are available with a wide range of standard options to meet air preparation needs.

The comprehensive Global Air Preparation System is available in three body sizes with either BSPP or NPT to accommodate thread type requirements.

Individual units can easily be assembled into various combinations, utilizing patented modular lightweight body connectors.

www.parker.com/globalfrl

Comprehensive Offering

P31 Mini Series
1/4" ports
40mm body width

P32 Compact Series
1/4", 3/8" and 1/2"
60mm body width

P33 Standard Series
1/2" and 3/4"
73mm body width

Filters

- 5µ particulate, 1.0µ and 0.01µ coalescing, and adsorber available as standard
- Transparent or metal bowl with manual or auto float drains standard

Regulators

- Available as stand alone, common port and electronic proportional
- Both relieving and non-relieving versions available

Filter / Regulators

- Compact design for space savings
- Available with all the same standard options as the filters and regulators

Lubricators

- Proportional oil delivery over a wide range of air flows
- Fill under pressure

Combinations

- Compact design for space savings
- Easily assembled
- Many configurations available

Accessories

- Solenoid operated soft start, quick dump, and soft start/ quick dump valves
- Manifold blocks
- Ball style lockout / shutoff valve
- Repair kits, gauges, etc.

Together we can power your application with clean, dry air

Fast cycle times, high product quality, and low downtime all require a clean, dry pneumatic system to function properly. Parker has what it takes to make sure pneumatic systems perform at their best.

Clean, dry pneumatic systems with Parker Global Air Preparation

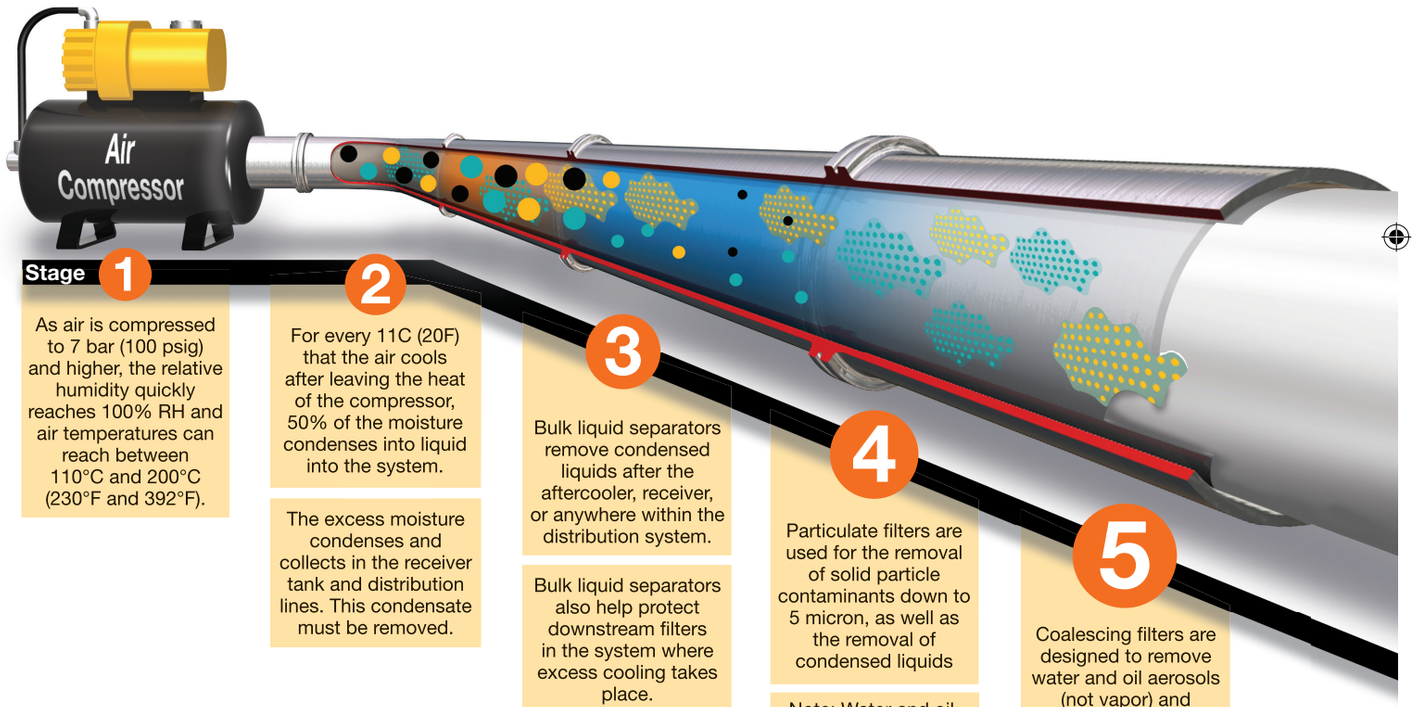

Stage 1

As air is compressed to 7 bar (100 psig) and higher, the relative humidity quickly reaches 100% RH and air temperatures can reach between 110°C and 200°C (230°F and 392°F).

2

For every 11C (20F) that the air cools after leaving the heat of the compressor, 50% of the moisture condenses into liquid into the system.

The excess moisture condenses and collects in the receiver tank and distribution lines. This condensate must be removed.

3

Bulk liquid separators remove condensed liquids after the aftercooler, receiver, or anywhere within the distribution system.

Bulk liquid separators also help protect downstream filters in the system where excess cooling takes place.

4

Particulate filters are used for the removal of solid particle contaminants down to 5 micron, as well as the removal of condensed liquids

Note: Water and oil, in vapor form, pass through general purpose particulate filters.

This type of filter should be used as a prefilter for the coalescing (oil removal) filter.

5

Coalescing filters are designed to remove water and oil aerosols (not vapor) and particulate from air streams down to 0.01 micron in size.

Installed in pairs, Particulate and Coalescing filters ensure a continuous supply of high quality air.

Key

- Particulate
- Oil
- Water
- Oil Vapor
- Water Vapor

Stages	1 2	3	4	5	6	7
Function	**Air Compressor**	**Bulk Liquid Removal**	**Particulate Filtration**	**Coalescing Filtration**	**Air Dryers**	**Hydrocarbon Removal**
Application	All pneumatic systems	Basic pneumatic systems	Basic pneumatic systems	Systems requiring highest quality air.	Systems requiring air with reduced moisture content	Systems requiring highest quality air for critical applications
Description	Air leaving the compressor room at 93ºC (200ºF) releases 95% of its moisture into the piping system when it cools to 38ºC (100ºF)	Removes bulk liquid contamination and protects filters where excess cooling takes place in the distribution piping	Removes solid particulates down to 5 micron, and the separation of bulk contaminants.	Removes liquid aerosols and submicron particulates (not vapor) down to 0.01 micron.	Removes water vapor from air stream. Dew point reduced down to -40'C membrane and -70'C desiccant.	Removal of odors and trace vapors for critical applications.
Parker Global Air Preparation Solution	Customer supplied	P3TF Bulk Liquid Separator	P31, P32, P33 Particulate Filter	P31, P32, P33 Coalescing Filter	P3XJ Membrane Dryer P3TJ Regenerative Desiccant Dryer	P31, P32, P33 Activated Carbon (Adsorber) Filter

A completely modular air preparation system

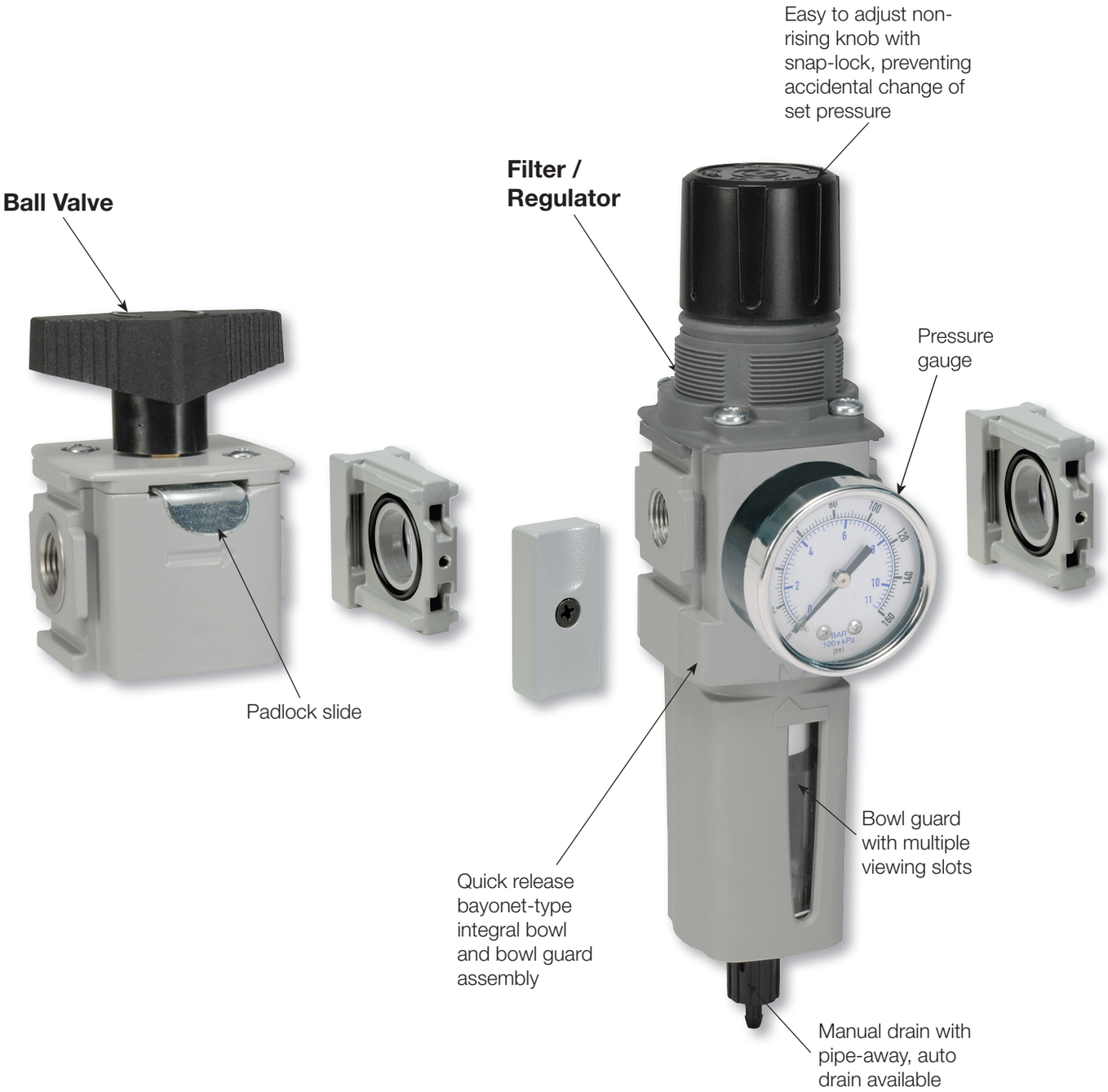

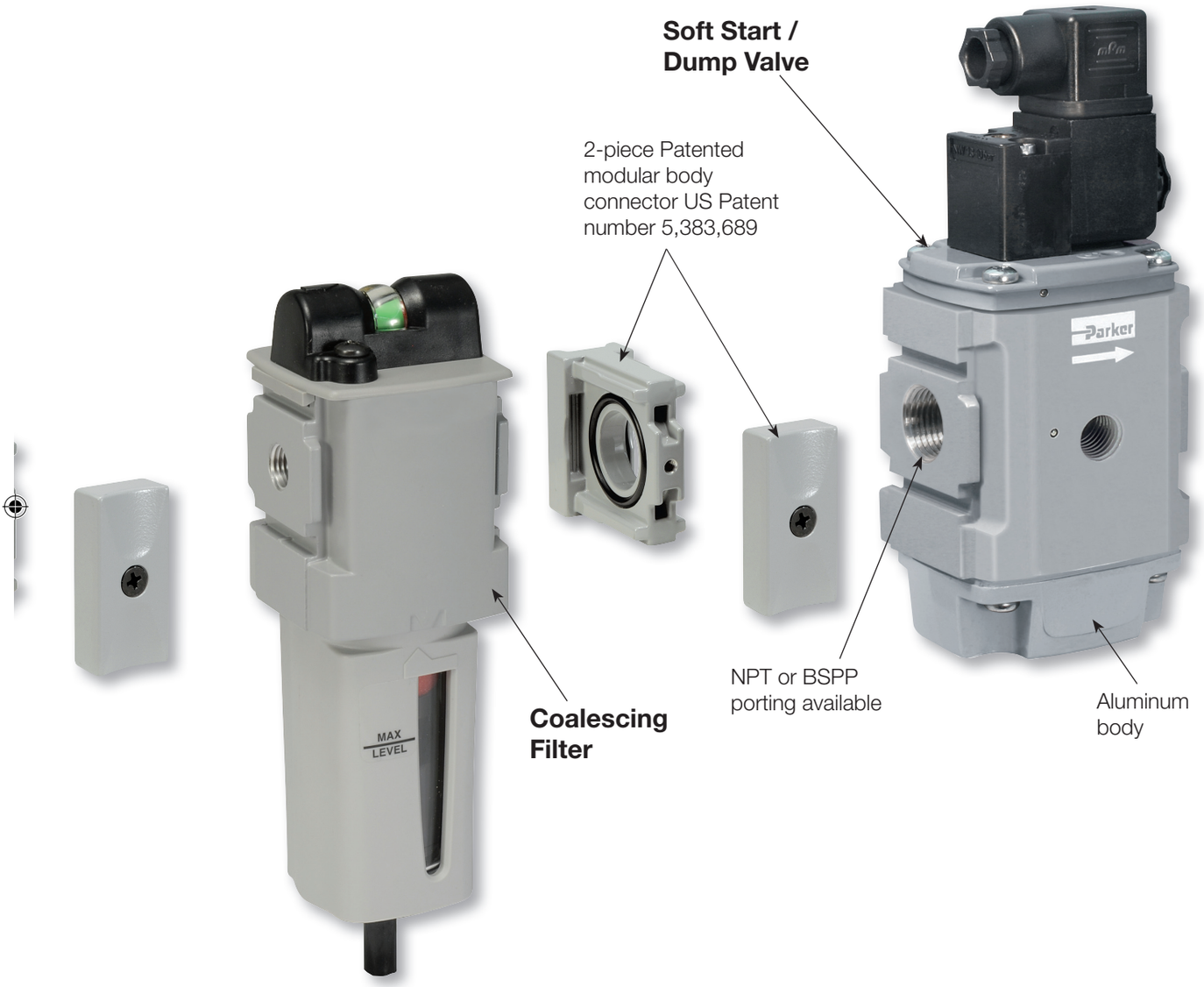

PDE2676TCUK_Parker_Global_Air_Preparation_System_V4.indd 9
02/09/2015 14:40:35

Air Preparation

P31 Mini Series

40mm body width
1/4" Ported

Flows up to:	dm^3/s	(SCFM)
Filter	12	(25)
Coalescer	3.6	(7.5)
Regulator	32	(68)
Filter/Regulator	35	(74)
Lubricator	19	(40)

Features:
- Space saving integral gauge
- Manifold style regulators available
- OSHA compliant shut-off valves
- Soft-Start & Quick Dump valves
- Electronic Proportional Regulator

P32 Compact Series

60mm body width
1/4", 3/8", & 1/2" Ported

Flows up to:	dm^3/s	(SCFM)
Filter	39	(82)
Coalescer	17	(36)
Regulator	78	(165)
Filter/Regulator	64	(136)
Lubricator	42	(90)

Features:
- Manifold style regulators available
- OSHA Compliant shut-off valves
- Soft-Start & Quick Dump valves
- Electronic Proportional Regulator

P33 Standard Series

73mm body width
1/2" & 3/4" Ported

Flows up to:	dm^3/s	(SCFM)
Filter	40	(85)
Coalescer	34	(72)
Regulator	111	(233)
Filter/Regulator	108	(230)
Lubricator	71	(150)

Features:
- OSHA Compliant shut-off valves
- Soft-Start & Quick Dump valves (Utilizes P32 size only)
- Electronic proportional regulator (Utilizes P32 size only)

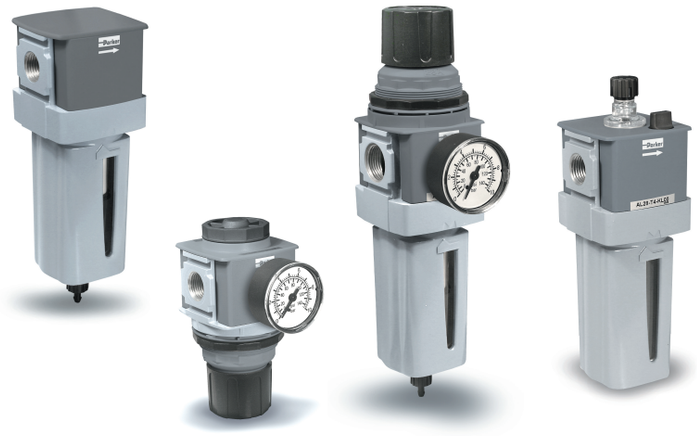

Valves and Actuators

Mini Series Complimentary Products

The P31 Mini Series FRL's and accessories are well matched for use with these Parker valves and actuators.

Isys Micro

Moduflex

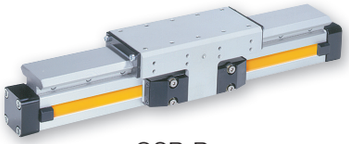
OSP-P

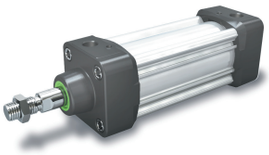
P1D

P1A

Compact Series Complimentary Products

The P32 Series FRL's & accessories are well matched for use with these Parker valves and actuators.

Isys ISO

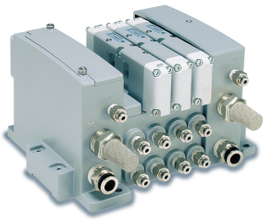
Isys HA / HB

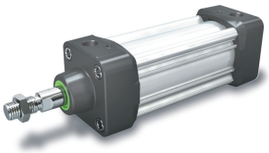
P1D

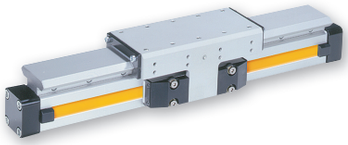
OSP-P

Standard Series Complimentary Products

The P33 Series FRL's & accessories are well matched for use with these Parker valves and actuators.

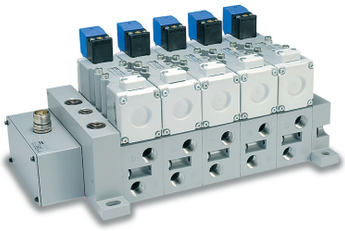
Isys ISO

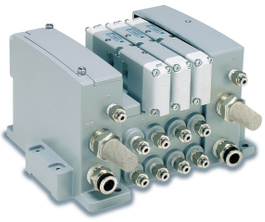
Isys HA / HB

P1D

OSP-P

Complete Pneumatic System

Common Port Manifold Regulators

- Multiple output pressures (P2, P3, P4, etc.) with common inlet (P1)
- Available in two sizes P31 and P32
- Balanced valve design for accurate pressure regulation
- Outlet pressure ports in front and rear of unit.
- Multiple spring ranges available

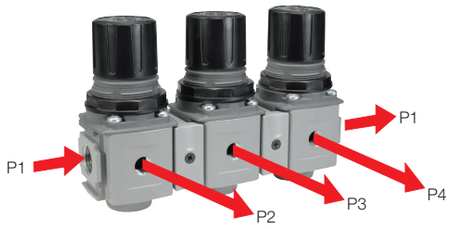

Electronic Proportional Regulator

- Electro-Pneumatic regulator
- Integrated systems control
- Accurate output pressure
- Micro parameter settings
- Selectable I/O parameters
- Quick, full flow exhaust
- LED display indicates output pressure
- No air consumption in steady state
- Multiple mounting options
- Protection to IP65

P31P Mini Series

P32P Compact Series

Semi Precision Regulator and Filter/Regulator

- Available in P32 compact series
- Fine adjustment sensitivity
- Good repeatability and minimal pressure drop
- Good flow capacity
- Light gray knob for easy identification

Optional Tamperproof Kits

- One facilitates the permanent tamperproofing of the Regulator and Filter/Regulator units
- Hinged black part clamps over control knob and is locked in place after sliding yellow cover over it
- Other allows for removable lockout/tagout tamperproofing
  - Four pad lock location holes tagout
  - Hinged locking clamp secures over existing knob via yellow cover which is slid over into place

Additional Options (Consult factory for availability)

- T-Handle (P32 only)

- Preset and Tamperproof

- Preset
- Pressure Limiter

Application Guide

FRL to Valve: The chart below contains recommendations for the correct selection of Global Air Preparation units to suit the number and size of valves in a typical application.

	P31 Mini Series					P32 Compact Series						P33 Standard Series				
	Number of valves that would actuate at once															
	1	2	3	4	5	6	7	8	9	10	11	12	13	14	15	16
Moduflex 1																
Isys Micro																
HB / Viking Xtreme																
Moduflex 2																
HA / Global ISO																
							See Larger Parker FRL Offering									

Actuator to FRL: The chart below contains recommendations for the correct selection of Global Air Preparation units suitable for each cylinder size. If you have a tube length over 2 m, choose one tube size larger than the chart. The table is based on a Maximum cylinder speed of 0.5m/s

Cyl Ø mm Cyl Ø inches	Cylinder bore size													
	5 (5/16)	10 (7/16)	16 (9/16)	20 (3/4)	25 (1)	28 (1-1/8)	32 (1-1/4)	40 (1-1/2)	45 (1-3/4)	50 (2)	63 (2-1/2)	75 (3)	80 (3-1/4)	100 (4)
Tube Ø mm Tube Ø inches	Tube diameter external													
	4 (5/32)	4 (5/32)	4 (5/32)	6 (1/4)	6 (1/4)	6 (1/4)	6 (1/4)	8 (5/16)	8 (5/16)	8 (5/16)	10 (3/8)	10 (3/8)	12 (1/2)	12 (1/2)
Number of cylinders actuating at once 1														
2														
3														
4														
5														
6														
7														
8														
9														
10														
	P31 Mini Series					P32 Compact Series			P33 Standard Series			See Larger Parker FRL Offering		

Note: Data listed above is simply a guideline for a typical application only. Proper sizing and correct flow requirements must be taken into account.

DECLARATION

We **Parker Hannifin Manufacturing Austria GmbH**
Badener Straße 12
2700 Wiener Neustadt
Austria

Product	Series	Category
Filter*	P31FB, P32FB, P33FA	for zone 1, 21
Regulator	P31RB, P32RB, P33RA	for zone 1, 21
Filter regulator*	P31EB, P32EB, P33EA	for zone 1, 21
Lubricator*	P31LB, P32LB, P33LA	for zone 1, 21
Ball Valve & Slide Valve	P31VB, P32VB, P33VB	for zone 1, 21
Manifold	P31MA, P32MA, P33MA	for zone 1, 21
For non-fitted solenoid product		
Soft start & Dump Valve	P31TA, P32TA	for zone 1, 21
Soft Start Valve	P31SA, P32SA	for zone 1, 21
Dump Valve	P31DA, P32DA	for zone 1, 21

*Filter, Filter Regulator and Lubricator – This evaluation applies to products fitted with metal bowls only.

Following Ignition Hazard Assessments performed on the non-electrical products listed above, in accordance with the requirements of EN 13463-1:2009, it was considered that the equipment does not contain its own source of ignition, and therefore is not within the scope of directive 94/9/EC.

The products can be used in a Group II Category 2 environment assuming that the ATEX Directive and the following conditions are complied with:

- Installation and maintenance of the product must be undertaken by qualified personnel.
- Do not mount the products in an area where impact may occur.
- Filters must be used to limit the introduction of particles and to capture particles generated in service.
- Supply air quality must be within ISO 8573-1:2010 Class 1.4.2.
- Maximum working temperature to be as stated on product label.
- WARNING – pulsating pressure and/or a closed circuit can generate heat.
- Deposits of dust on the product must not exceed 5mm thickness.
  Refer to technical file for surface areas of plastics.
  The unit must be earthed via the compressed air supply line.
- The unit must not come into contact with liquid solvents, acids or alkalis
  Refer to technical file for chemicals known to be incompatible.
  Product cleaning must be undertaken using a method complying with the specifications of the ATEX zone, preferably by using mild soap and water or antistatic products.
- **Regulators, Filter Regulators:**
  Do not use Regulators or Filter Regulators within systems that can create vibration within the Regulator/Filter Regulator unit.
- **Solenoid Operated Valves:**
  Are suitable for use in an ATEX environment, (Group II Category 2) providing ATEX approved solenoids are fitted.
- Technical file available on request.

Approved by:

Engineering Manager – Air Preparation EMEA

Validated for transport applications

As you would expect from a member of the Rail Industry Association, Global air preparation meets the test specification standards enabling the Global series to be used as a validated product in a variety of rail applications.

Railway Industry Association

CEI/ICE 61373 1999-1 Category 2 (BS EN 61373:1999)

Position of T-Brackets for multiple units

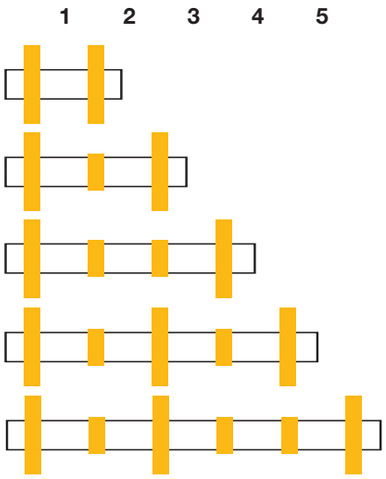

Recommended mounting / fixation method for use in transportation applications.

- The use of a port block kit and T-bracket should be used at all times (angle / L-brackets should not be used in rail applications)
- Additional security is recomended with the use of 'vibration proof adhesive' on the wall mounting screws to the port / connector block
- Inlet (P1) and Outlet (P2) ports should always have a T-Bracket fixation to eliminate product canterlever stress
- 'L' brackets should not be used in the use for rail service

For illustration purposes only

Popular Combinations: Inlet pressure 10 bar (145 psig), Secondary pressure 6.3 bar (91.3 psig), 1 bar (14.5 psig) pressure drop.

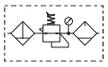

Filter + Regulator + Lubricator Combinations, Poly bowl
5 micron element, 8 bar (116 psig) regulator + gauge and wall mounting brackets

Port size	Flow		Manual drain	Weight	Pulse drain	Weight
1/4"	13 dm³/s	27 (scfm)	**P31CB12GEMNTLNW**	0.46 kg (1.01 lbs)	**P31CB12GEBNTLNW**	0.46 kg (1.01 lbs)

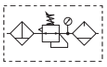

Filter/Regulator + Lubricator Combinations, Poly bowl
5 micron element, 8 bar (116 psig) regulator + gauge and wall mounting brackets

Port size	Flow		Manual drain	Weight	Pulse drain	Weight
1/4"	14 dm³/s	28 (scfm)	**P31CA12GEMNTLNW**	0.35 kg (0.77 lbs)	**P31CA12GEBNTLNW**	0.35kg (0.77 lbs)

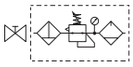

Ball Valve + Filter/Regulator + Lubricator Combinations, Poly bowl
5 micron element, 8 bar (116 psig) regulator + gauge and wall mounting brackets

Port size	Flow		Manual drain	Weight	Pulse drain	Weight
1/4"	14 dm³/s	28 (scfm)	**P31QA12GEMNTLNW**	0.35 kg (0.77 lbs)	**P31QA12GEBNTLNW**	0.35kg (0.77 lbs)

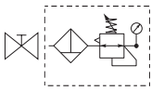

Ball Valve + Filter/Regulator Combinations + Poly bowl
5 micron element, 8 bar Regulator + Gauge and Wall Mounting Brackets

Port size	Flow		Manual drain	Weight	Pulse drain	Weight
1/4"	14 dm³/s	28 (scfm)	**P31QN12GEMNTW**	0.4 kg (0.88 lbs)	**P31QN12GEBNTW**	0.4 kg (0.88 lbs)

P 3 1 [ ] [ ] [ ] [ ] [ ] **E** [ ] **N** [ ] **L N** **W**

Combination	
Combination	**C**
Shut off + Combi [1]	**Q**

Thread type	
BSPP	**1**
NPT	**9**

Port size	
1/4	**2**

Drain type	
Manual drain	**M**
Pulse drain	**B**

Adjustment range	
With square gauge	
2 bar *	**V**
4 bar	**S**
8 bar **	**T**
Without gauge	
2 bar	Y
4 bar	L
8 bar	N
16 bar	H

Add only for options with Lubricator

Combination type	
F/R+L	**A**
F+R+L	**B**
F/R	**N**

Bowl type	
Poly bowl with bowl guard	**G**
Metal bowl without sight glass	**M**

Note: All bowl types are the same for each component

Example: If a "G" is specified for a F+L, both units would get a poly bowl with bowl guard.

* Unit comes with 0-4 bar, gauge respectively

** Unit comes with 0-10 bar, gauge respectively

[1] Option not available with F+R+L

Bar gauges fitted to BSPP

PSI gauges fitted to NPT

Popular Combinations: Inlet pressure 10 bar (145 psig), Secondary pressure 6.3 bar (91.3 psig), 1 bar (14.5 psig) pressure drop.

Filter + Regulator + Lubricator Combinations, Poly bowl
5 micron element, 8 bar (116 psig) regulator + gauge and wall mounting brackets

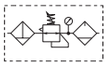

Port size	Flow		Manual drain	Weight	Auto drain	Weight
1/4"	20 dm³/s	42 (scfm)	**P32CB12GEMNGLNW**	1.29 kg (2.84 lbs)	**P32CB12GEANGLNW**	1.29 kg (2.84 lbs)
3/8"	32 dm³/s	68 (scfm)	**P32CB13GEMNGLNW**	1.29 kg (2.84 lbs)	**P32CB13GEANGLNW**	1.29 kg (2.84 lbs)
1/2"	40 dm³/s	85 (scfm)	**P32CB14GEMNGLNW**	1.29 kg (2.84 lbs)	**P32CB14GEANGLNW**	1.29 kg (2.84 lbs)

Filter/Regulator + Lubricator Combinations, Poly bowl
5 micron element, 8 bar (116 psig) regulator + gauge and wall mounting brackets

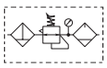

Port size	Flow		Manual drain	Weight	Auto drain	Weight
1/4"	22 dm³/s	45 (scfm)	**P32CA12GEMNGLNW**	1.03 kg (2.27 lbs)	**P32CA12GEANGLNW**	1.03 kg (2.27 lbs)
3/8"	33 dm³/s	70 (scfm)	**P32CA13GEMNGLNW**	1.03 kg (2.27 lbs)	**P32CA13GEANGLNW**	1.03 kg (2.27 lbs)
1/2"	43 dm³/s	90 (scfm)	**P32CA14GEMNGLNW**	1.03 kg (2.27 lbs)	**P32CA14GEANGLNW**	1.03 kg (2.27 lbs)

Ball Valve + Filter/Regulator + Lubricator Combinations, Poly bowl
5 micron element, 8 bar (116 psig) regulator + gauge and wall mounting brackets

Port size	Flow		Manual drain	Weight	Auto drain	Weight
3/8"	33 dm³/s	70 (scfm)	**P32QA13GEMNGLNW**	1.03 kg (2.27 lbs)	**P32QA13GEANGLNW**	1.03 kg (2.27 lbs)
1/2"	43 dm³/s	90 (scfm)	**P32QA14GEMNGLNW**	1.03 kg (2.27 lbs)	**P32QA14GEANGLNW**	1.03 kg (2.27 lbs)

Ball Valve + Filter/Regulator Combinations + Poly bowl
5 micron element, 8 bar Regulator + Gauge and Wall Mounting Brackets

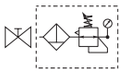

Port size	Flow		Manual drain	Weight	Auto drain	Weight
3/8"	33 dm³/s	70 (scfm)	**P32QN13GEMNGW**	1.1 kg (2.42 lbs)	**P32QN13GEANGW**	1.1 kg (2.42 lbs)
1/2"	43 dm³/s	90 (scfm)	**P32QN14GEMNGW**	1.1 kg (2.42 lbs)	**P32QN14GEANGW**	1.1 kg (2.42 lbs)

P 3 2 [ ] [ ] [ ] [ ] [ ] **E** [ ] **N** [ ] **L N** **W**

Combination	
Combination	**C**
Shut off + Combination [1]	**Q**

[1] Option not available with F+R+L and 1/4" port size (2)

Thread type	
BSPP	**1**
NPT	**9**

Port size	
1/4	**2**
3/8	**3**
1/2	**4**

Drain type	
Auto drain	**A**
Manual drain	**M**

Adjustment range	
With round gauge	
0-2 bar; 0-30 psi; 0.2 MPa	**Z**
4 bar; 60 psi; 0.4 MPa	**M**
8 bar; 125 psi; 0.8 MPa	**G**
Without gauge	
2 bar	Y
4 bar	L
8 bar	N
17 bar	H

Add only for options with Lubricator

Combination type	
F/R+L	**A**
F+R+L	**B**
F/R	**N**

Bowl type	
Poly bowl with bowl guard	**G**
Metal bowl with sight glass	**S**

Note: All bowl types are the same for each component

Example: If a "G" is specified for a F+L, both units would get a poly bowl with bowl guard.

Popular Combinations: Inlet pressure 10 bar (145 psig), Secondary pressure 6.3 bar (91.3 psig), 1 bar (14.5 psig) pressure drop.

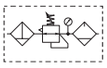

Filter + Regulator + Lubricator Combinations, Poly bowl
5 micron element, 8 bar (116 psig) regulator + gauge and wall mounting brackets

Port size	Flow		Manual drain	Weight	Auto drain	Weight
1/2"	43 dm³/s	90 (scfm)	**P33CB14GEMNGLNW**	1.84 kg (4.06 lbs)	**P33CB14GEANGLNW**	1.84 kg (4.06 lbs)
3/4"	52 dm³/s	110 (scfm)	**P33CB16GEMNGLNW**	1.84 kg (4.06 lbs)	**P33CB16GEANGLNW**	1.84 kg (4.06 lbs)

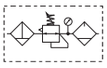

Filter/Regulator + Lubricator Combinations, Poly bowl
5 micron element, 8 bar (116 psig) regulator + gauge and wall mounting brackets

Port size	Flow		Manual drain	Weight	Auto drain	Weight
1/2"	52 dm³/s	110 (scfm)	**P33CA14GEMNGLNW**	1.51 kg (3.33 lbs)	**P33CA14GEANGLNW**	1.51 kg (3.33 lbs)
3/4"	71 dm³/s	150 (scfm)	**P33CA16GEMNGLNW**	1.51 kg (3.33 lbs)	**P33CA16GEANGLNW**	1.51 kg (3.33 lbs)

Ball Valve + Filter/Regulator + Lubricator Combinations, Poly bowl
5 micron element, 8 bar (116 psig) regulator + gauge and wall mounting brackets

Port size	Flow		Manual drain	Weight	Auto drain	Weight
1/2"	52 dm³/s	110 (scfm)	**P33QA14GEMNGLNW**	1.51 kg (3.33 lbs)	**P33QA14GEANGLNW**	1.51 kg (3.33 lbs)
3/4"	71 dm³/s	150 (scfm)	**P33QA16GEMNGLNW**	1.51 kg (3.33 lbs)	**P33QA16GEANGLNW**	1.51 kg (3.33 lbs)

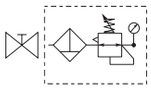

Ball Valve + Filter/Regulator Combinations + Poly bowl
5 micron element, 8 bar Regulator + Gauge and Wall Mounting Brackets

Port size	Flow		Manual drain	Weight	Auto drain	Weight
1/2"	52 dm³/s	110 (scfm)	**P33QN14GEMNGW**	1.7 kg (3.75 lbs)	**P33QN14GEANGW**	1.7 kg (3.75 lbs)
3/4"	71 dm³/s	150 (scfm)	**P33QN16GEMNGW**	1.7 kg (3.75 lbs)	**P33QN16GEANGW**	1.7 kg (3.75 lbs)

P 3 3 [ ] [ ] [ ] [ ] [ ] **E** [ ] **N** [ ] **L N** **W**

Combination	
Combination	**C**
Shut off + Combination [1]	**Q**

[1] Option not available with F+R+L

Thread type	
BSPP	**1**
NPT	**9**

Port size	
1/2	**4**
3/4	**6**

Drain type	
Auto drain	**A**
Manual drain	**M**

Adjustment range	
With round gauge	
0-2 bar; 0-30 psi; 0.2 MPa	**Z**
4 bar; 60 psi; 0.4 MPa	**M**
8 bar; 125 psi; 0.8 MPa	**G**

Add only for options with Lubricator

Combination type	
F/R+L	**A**
F+R+L	**B**
F/R	**N**

Bowl type	
Poly bowl with bowl guard	**G**
Metal bowl with sight glass	**S**

Note: All bowl types are the same for each component

Example: If a "G" is specified for a F+L, both units would get a poly bowl with bowl guard.

Popular Combination Dimensions mm (inches)

P31C

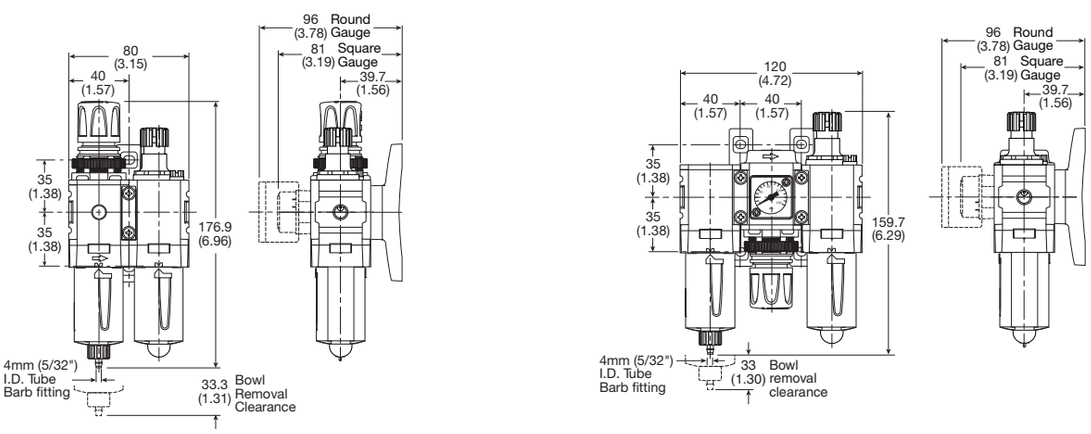

P32C

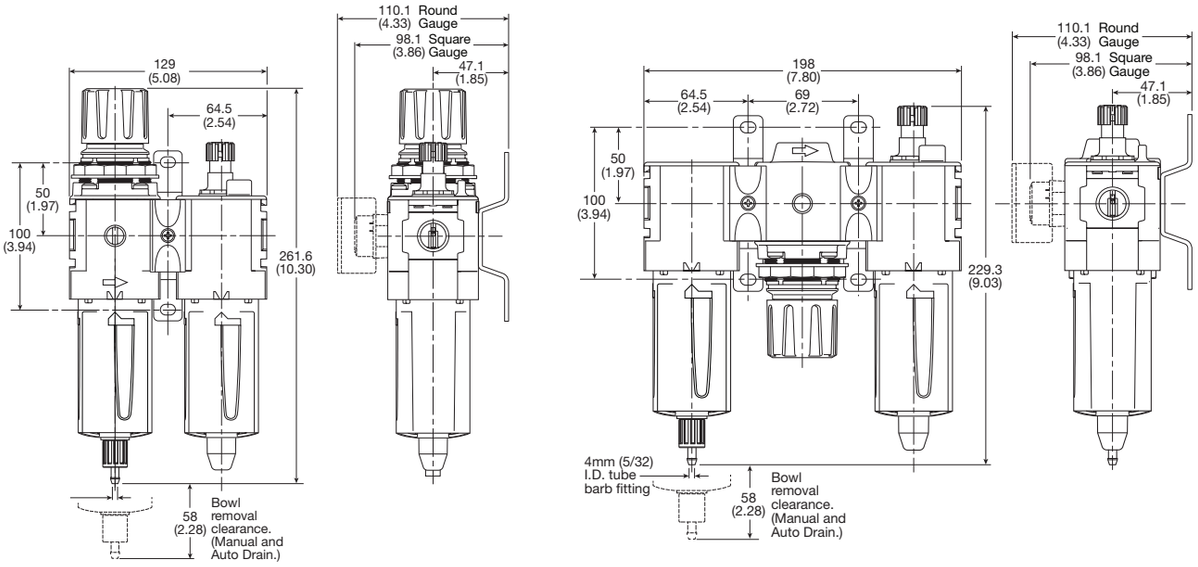

P33C

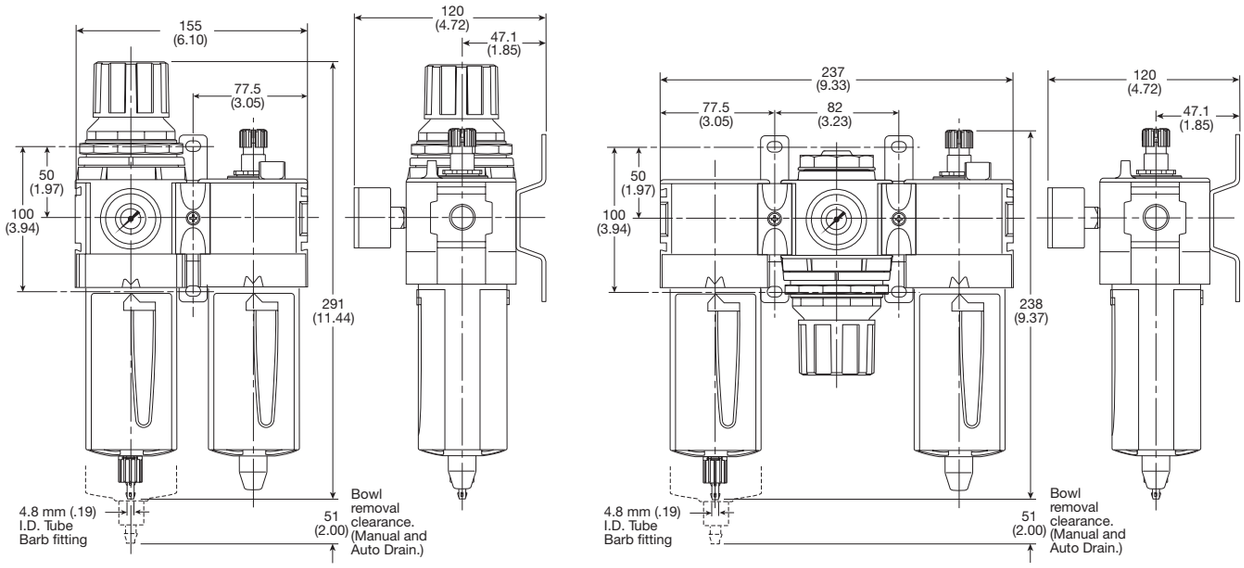

Mini Particulate Filter - P31

Symbols

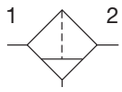

Manual drain

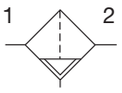

Pulse drain

- Integral 1/4" ports (NPT & BSPP)
- High efficiency 5 micron element as standard
- Excellent water removal efficiency
- Robust but lightweight aluminum construction
- One hand operation for easy element cartridge removal
- Positive bayonet latch to ensure correct & safe fitting

Options:

P31FB [ ] **2** **E** [ ] [ ] **N**

Basic series

Global modular mini particulate filter	P31FB

Thread type

BSPP	**1**
NPT	9

Port size

1/4	**2**

Element

5µ Element	**E**

Bowl type

G	**Poly bowl with bowl guard**
M	**Metal bowl without sight gauge**

Drain type

M	**Manual drain**
B	**Pulse drain**

Mounting

N	**No bracket**

Bold items are most common.

Port size	Description	Flow‡ dm^3/s (scfm)	Max. bar (psig)	Height mm (inches)	Width mm (inches)	Depth mm (inches)	Part number†
1/4"	Poly bowl - manual drain	12 (25)	10 (150)	124.8 (4.91)	40 (1.58)	40 (1.58)	**P31FB12EGMN**
1/4"	Poly bowl - pulse drain	12 (25)	10 (150)	119.6 (4.71)	40 (1.58)	40 (1.58)	**P31FB12EGBN**
1/4"	Metal bowl - manual drain	12 (25)	17 (250)	124.8 (4.91)	40 (1.58)	40 (1.58)	**P31FB12EMMN**
1/4"	Metal bowl - pulse drain	12 (25)	17 (250)	119.6 (4.71)	40 (1.58)	40 (1.58)	**P31FB12EMBN**

† **Standard part numbers shown in bold. For other models refer to Options chart above.**
‡ Flow with 6.3 bar (91.3 psig) inlet pressure and 0.34 (4.9 psig) pressure drop.

Specifications

Flow capacity*	1/4	12 dm^3/s (25 scfm)
Operating temperature	Plastic bowl Metal bowl	-10°C to 52°C (14°F to 125°F) -10°C to 65.5°C (14°F to 150°F)
Max. supply pressure	Plastic bowl Metal bowl	10 bar (150 psig) 17 bar (250 psig)
Standard filtration		5 micron
Useful retention†		12 cm^3 (0.4 US oz.)
Port size	BSPP / NPT	1/4
Weight		0.11 kg (0.24 lbs)

* Inlet pressure 6.3 bar (91.3 psig). Pressure drop 0.34 bar (4.9 psig).
† Useful retention refers to volume below the quiet zone baffle.

Air quality:
Within ISO 8573-1: 1991 Class 3 (Particulates)
Within ISO 8573-1: 2001 Class 6 (Particulates)

Material Specifications

Body	Aluminum
Body cap	ABS
Bowl	Polycarbonate
Bowl guard	Nylon
Element retainer	Acetal
Baffle	Acetal
Filter element	Sintered polyethylene
Seals	Nitrile

Flow Charts

1/4 Filter

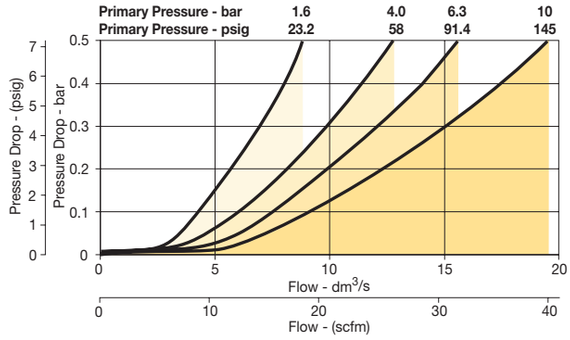

Dimensions mm (inches)

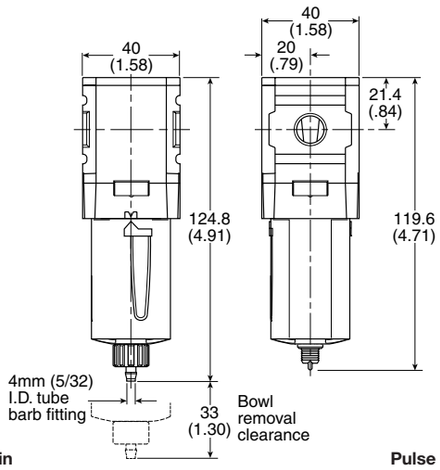

Manual Drain **Pulse Drain**

Repair and Service Kits

Plastic bowl / Bowl guard manual drain	**P31KB00BGM**
Metal bowl / w/o sight gauge manual drain	**P31KB00BMM**
Plastic bowl / Bowl guard pulse drain	**P31KB00BGB**
Metal bowl / w/o sight gauge pulse drain	**P31KB00BMB**
5µ particle filter element	**P31KA00ESE**
C-bracket (fits to body)	**P31KA00MW**
T-bracket with body connector	**P31KA00MT**
Body connector	**P31KA00CB**

Compact Particulate Filter - P32

Symbols

Manual drain Auto drain

- Integral 1/4", 3/8" or 1/2" ports (NPT & BSPP)
- High efficiency 5 micron element as standard
- Excellent water removal efficiency
- Robust but lightweight aluminum construction
- Positive bayonet latch to ensure correct & safe fitting

Options:

P32FB [ ] [ ] **E** [ ] [ ] **N**

Basic series	
Global modular compact particulate filter	P32FB

Thread type	
BSPP	**1**
NPT	9

Port size	
1/4	**2**
3/8	**3**
1/2	**4**

Element	
5µ Element	**E**

Bowl type	
G	**Poly bowl with bowl guard**
S	**Metal bowl with sight gauge**

Drain type	
M	**Manual drain**
A	**Auto drain**

Mounting	
N	**No bracket**

Bold items are most common.

Port size	Description	Flow‡ dm^3/s (scfm)	Max. bar (psig)	Height mm (inches)	Width mm (inches)	Depth mm (inches)	Part number†
1/4"	Poly bowl - manual drain	24 (50)	10 (150)	190.3 (7.49)	60 (2.36)	60 (2.36)	**P32FB12EGMN**
1/4"	Poly bowl - auto drain	24 (50)	10 (150)	184.3 (7.26)	60 (2.36)	60 (2.36)	**P32FB12EGAN**
1/4"	Metal bowl - manual drain	24 (50)	17 (250)	190.3 (7.49)	60 (2.36)	60 (2.36)	**P32FB12ESMN**
1/4"	Metal bowl - auto drain	24 (50)	17 (250)	184.3 (7.26)	60 (2.36)	60 (2.36)	**P32FB12ESAN**
3/8"	Poly bowl - manual drain	37 (78)	10 (150)	190.3 (7.49)	60 (2.36)	60 (2.36)	**P32FB13EGMN**
3/8"	Poly bowl - auto drain	37 (78)	10 (150)	184.3 (7.26)	60 (2.36)	60 (2.36)	**P32FB13EGAN**
3/8"	Metal bowl - manual drain	37 (78)	17 (250)	190.3 (7.49)	60 (2.36)	60 (2.36)	**P32FB13ESMN**
3/8"	Metal bowl - auto drain	37 (78)	17 (250)	184.3 (7.26)	60 (2.36)	60 (2.36)	**P32FB13ESAN**
1/2"	Poly bowl - manual drain	39 (82)	10 (150)	190.3 (7.49)	60 (2.36)	60 (2.36)	**P32FB14EGMN**
1/2"	Poly bowl - auto drain	39 (82)	10 (150)	184.3 (7.26)	60 (2.36)	60 (2.36)	**P32FB14EGAN**
1/2"	Metal bowl - manual drain	39 (82)	17 (250)	190.3 (7.49)	60 (2.36)	60 (2.36)	**P32FB14ESMN**
1/2"	Metal bowl - auto drain	39 (82)	17 (250)	184.3 (7.26)	60 (2.36)	60 (2.36)	**P32FB14ESAN**

† **Standard part numbers shown in bold. For other models refer to Options chart above.**
‡ Flow with 6.3 bar (91.3 psig) inlet pressure and 0.34 (4.9 psig) pressure drop.

Specifications

Flow capacity*	1/4	24 dm³/s (50 scfm)
	3/8	37 dm³/s (78 scfm)
	1/2	39 dm³/s (82 scfm)
Operating temperature	Plastic bowl	-25°C to 52°C (-13°F to 125°F)
	Metal bowl	-25°C to 65.5°C (-13°F to 150°F)
Max. supply pressure	Plastic bowl	10 bar (150 psig)
	Metal bowl	17 bar (250 psig)
Standard filtration		5 micron
Useful retention†		51 cm³ (1.7 US oz.)
Port size	BSPP / NPT	1/4, 3/8, 1/2
Weight		0.28 kg (0.62 lbs)

* Inlet pressure 6.3 bar (91.3 psig). Pressure drop 0.34 bar (4.9 psig).
† Useful retention refers to volume below the quiet zone baffle.

Air quality:
Within ISO 8573-1: 1991 Class 3 (Particulates)
Within ISO 8573-1: 2001 Class 6 (Particulates)

Material Specifications

Body		Aluminum
Body cap		ABS
Bowls	Plastic bowl	Polycarbonate
	Metal bowl	Aluminum
Bowl guard		Nylon
Deflector		Polypropylene
Element retainer / Baffle		Acetal
Filter element		Sintered polyethylene
Seals		Nitrile
Sight gauge	Metal bowl	Nylon

Dimensions mm (inches)

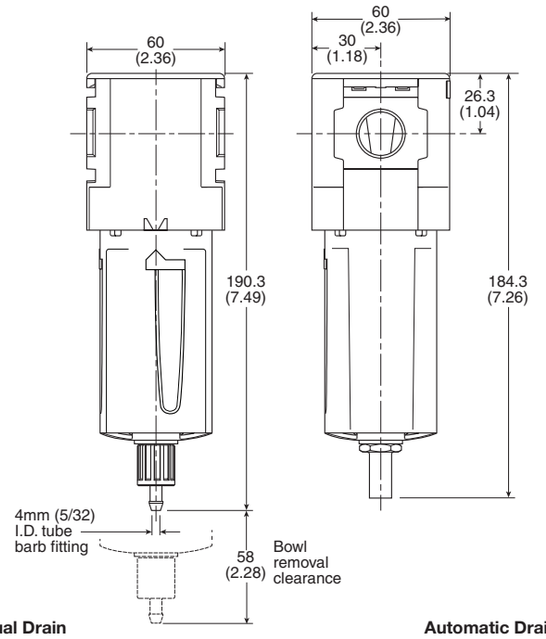

Manual Drain **Automatic Drain**

Flow Charts

P32FB 1/4" Filter

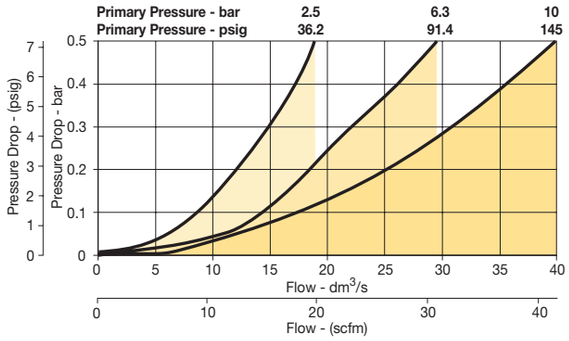

P32FB 3/8" Filter

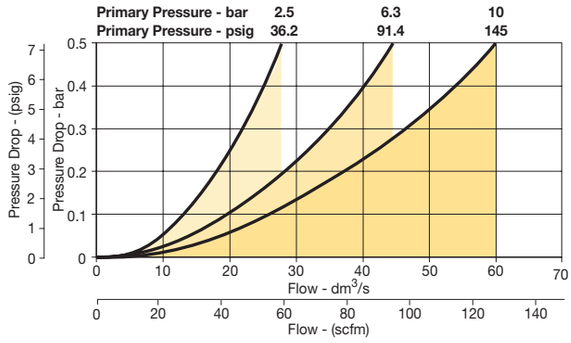

P32FB 1/2" Filter

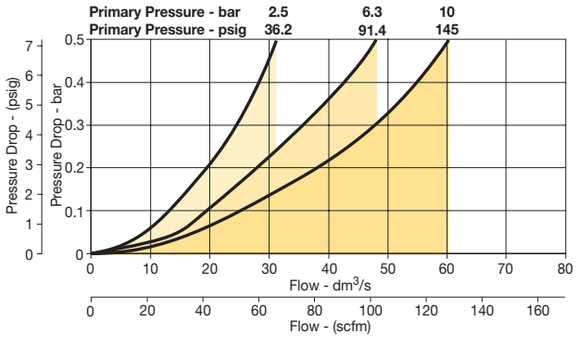

Repair and Service Kits

Plastic bowl / Bowl guard manual drain	**P32KB00BGM**
Metal bowl / Sight gauge manual drain	**P32KB00BSM**
Auto drain	**P32KA00DA**
5µ particle filter element	**P32KA00ESE**
L-bracket (fits to body)	**P32KA00ML**
T-bracket (fits to body connector)	**P32KA00MB**
T-bracket with body connector	**P32KA00MT**
Body connector	**P32KA00CB**

Standard Particulate Filter - P33

Symbols

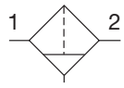

Manual drain

Auto drain

- Integral 1/2" or 3/4" ports (NPT & BSPP)
- High efficiency 5 micron element as standard
- Excellent water removal efficiency
- Robust but lightweight aluminum construction
- Positive bayonet latch to ensure correct & safe fitting

Options:

P33FA [ ] [ ] **E** [ ] [ ] **N**

Basic series

Global modular standard particulate filter	P33FA

Thread type

BSPP	**1**
NPT	9

Port size

1/2	**4**
3/4	**6**

Element

5µ Element	**E**

Bowl type

G	**Poly bowl with bowl guard**
S	**Metal bowl with sight gauge**

Drain type

M	**Manual drain**
A	**Auto drain**

Mounting

N	**No bracket**

Bold items are most common.

Port size	Description	Flow‡ dm^3/s (scfm)	Max. bar (psig)	Height mm (inches)	Width mm (inches)	Depth mm (inches)	Part number†
1/2"	Poly bowl - manual drain	40 (85)	10 (150)	213 (8.39)	73 (2.87)	73 (2.87)	**P33FA14EGMN**
1/2"	Poly bowl - auto drain	40 (85)	10 (150)	207 (8.15)	73 (2.87)	73 (2.87)	**P33FA14EGAN**
1/2"	Metal bowl - manual drain	40 (85)	17 (250)	213 (8.39)	73 (2.87)	73 (2.87)	**P33FA14ESMN**
1/2"	Metal bowl - auto drain	40 (85)	17 (250)	207 (8.15)	73 (2.87)	73 (2.87)	**P33FA14ESAN**
3/4"	Poly bowl - manual drain	48 (102)	10 (150)	213 (8.39)	73 (2.87)	73 (2.87)	**P33FA16EGMN**
3/4"	Poly bowl - auto drain	48 (102)	10 (150)	207 (8.15)	73 (2.87)	73 (2.87)	**P33FA16EGAN**
3/4"	Metal bowl - manual drain	48 (102)	17 (250)	213 (8.39)	73 (2.87)	73 (2.87)	**P33FA16ESMN**
3/4"	Metal bowl - auto drain	48 (102)	17 (250)	207 (8.15)	73 (2.87)	73 (2.87)	**P33FA16ESAN**

† **Standard part numbers shown in bold. For other models refer to Options chart above.**
‡ Flow with 6.3 bar (91.3 psig) inlet pressure and 0.34 (4.9 psig) pressure drop.

Specifications

Flow capacity*	1/2	40 dm³/s (85 scfm)
	3/4	48 dm³/s (102 scfm)
Operating temperature	Plastic bowl	-25°C to 52°C (-13°F to 125°F)
	Metal bowl	-25°C to 65.5°C (-13°F to 150°F)
Max. supply pressure	Plastic bowl	10 bar (150 psig)
	Metal bowl	17 bar (250 psig)
Standard filtration		5 micron
Useful retention†		85 cm³ (2.8 US oz.)
Port size	BSPP / NPT	1/2, 3/4
Weight		0.46 kg (1.01 lbs)

* Inlet pressure 6.3 bar (91.3 psig). Pressure drop 0.34 bar (4.9 psig).
† Useful retention refers to volume below the quiet zone baffle.

Air quality:
Within ISO 8573-1: 1991 Class 3 (Particulates)
Within ISO 8573-1: 2001 Class 6 (Particulates)

Material Specifications

Body		Aluminum
Body cap		ABS
Bowls	Plastic bowl	Polycarbonate
	Metal bowl	Aluminum
Bowl guard		Nylon
Deflector		Polypropylene
Element retainer / Baffle		Acetal
Filter element		Sintered polyethylene
Seals		Nitrile
Sight gauge	Metal bowl	Polycarbonate

Flow Charts

1/2 Filter

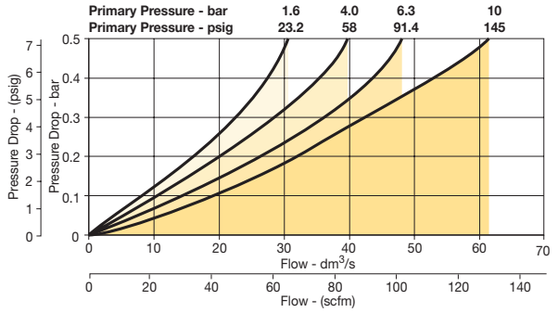

3/4 Filter

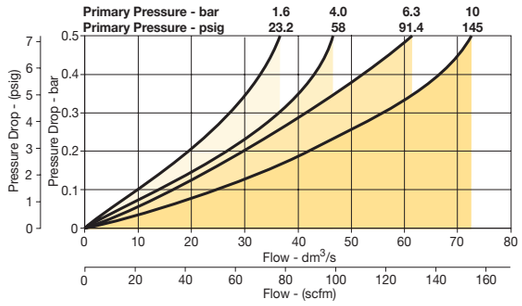

Dimensions mm (inches)

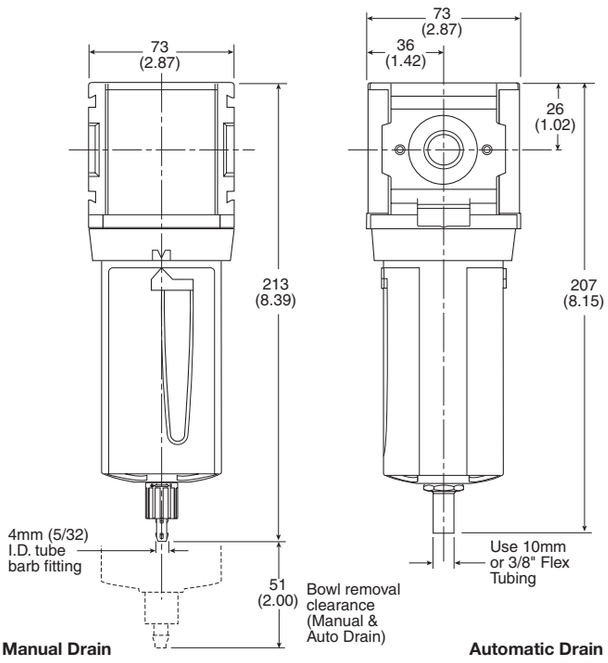

Repair and Service Kits

Plastic bowl / Bowl guard manual drain	**P33KA00BGM**
Metal bowl / Sight gauge manual drain	**P33KA00BSM**
Auto drain	**P32KA00DA**
5µ particle filter element	**P33KA00ESE**
L-bracket (fits to body)	**P33KA00ML**
T-bracket (fits to body connector)	**P32KA00MB**
T-bracket with body connector	**P33KA00MT**
Body connector	**P32KA00CB**

Mini Coalescing and Adsorber Filters - P31

Symbol

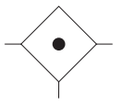

- Integral 1/4" ports (NPT & BSPP)
- Removes liquid aerosols and sub micron particles
- Oil free air for critical applications, such as air gauging, pneumatic instrumentation and control
- Differential Pressure Indicator (DPI) standard on Coalescing Filters
- Positive bayonet latch to ensure correct and safe fitting
- Adsorbing activated carbon element removes oil vapors and most hydrocarbons

Note: To optimize the life of coalescing element, it is advisable to install a P31F pre-filter with a 5 micron element upstream of the coalescing filter.

To optimize the life of an Adsorber it is advisable to install a P31 Coalescing Filter upstream of the Adsorber. Adsorber element should be replaced approximately every 1000 hours of service.

Options:

P31FB [ ] 2 [ ] [ ] [ ] N

Basic series	
Global modular mini coalescing filter	P31FB

Thread type	
BSPP	**1**
NPT	9

Port size	
1/4	**2**

Element	
0.01µ Element	**C**
0.01µ Element with DPI	**D**
1µ Element	9
1µ Element with DPI	Q
Adsorber	**A**

Bowl type	
G	**Poly bowl with bowl guard**
M	**Metal bowl without sight gauge**

Drain type	
B	**Pulse drain)**
M	**Manual drain**

Mounting	
N	**No bracket**

Bold items are most common.

Port size	Description	Flow‡ dm^3/s (scfm)	Max. bar (psig)	Height mm (inches)	Width mm (inches)	Depth mm (inches)	Part number†
1/4"	Poly bowl - 0.01 micron - manual drain	3.6 (7.5)	10 (150)	136.9 (5.39)	40 (1.58)	40 (1.58)	**P31FB12DGMN**
1/4'	Poly bowl - 0.01 micron - pulse drain	3.6 (7.5)	10 (150)	131.7 (5.19)	40 (1.58)	40 (1.58)	**P31FB12DGBN**
1/4"	Metal bowl - 0.01 micron - manual drain	3.6 (7.5)	10 (150)	136.9 (5.39)	40 (1.58)	40 (1.58)	**P31FB12DMMN**
1/4'	Metal bowl - 0.01 micron - pulse drain	3.6 (7.5)	10 (150)	131.7 (5.19)	40 (1.58)	40 (1.58)	**P31FB12DMBN**

† **Standard part numbers shown in bold. For other models refer to Options chart above.**
‡ Flow with 6.3 bar (91.3 psig) inlet pressure and 0.2 (3 psig) pressure drop.

Specifications

Flow capacity		
1.0 micron coalescing		5.5 dm^3/s (12 scfm)
0.01 micron coalescing		3.6 dm^3/s (7.5 scfm)
Activated carbon adsorber		6 dm^3/s (12.7 scfm)
Operating temperature	Plastic bowl	-10°C to 52°C (14°F to 125°F)
	Metal bowl	-10°C to 65.5°C (14°F to 150°F)
Max. supply pressure	Plastic bowl	10 bar (150 psig)
	Metal bowl	10 bar (150 psig) §
Standard filtration		1.0 and 0.01 micron
Adsorber	Max. oil carryover (ppm w/w)	0.003 @ 21°C (70°F)
Useful retention†		12 cm^3 (0.4 US oz.)
Port size	BSPP / NPT	1/4
Weight		0.11 kg (0.24 lbs)

Inlet pressure 6.3 bar (91.3 psig), Pressure drop 0.2 bar (3 psig), Saturated Element.

† Useful retention refers to volume below the quiet zone baffle.

§ Without pressure indicator (DPI) – max. pressure for metal bowl version is 17 bar (250 psig).

Material Specifications

Body		Aluminum
Body cap		ABS
Bowl	Plastic bowl	Polycarbonate
	Metal bowl	Aluminum
Filter element	1.0 and .01 micron	Borosilicate cloth
Adsorber		Activated carbon
Seals		Nitrile

Flow Charts

P31 - 1.0 micron flow

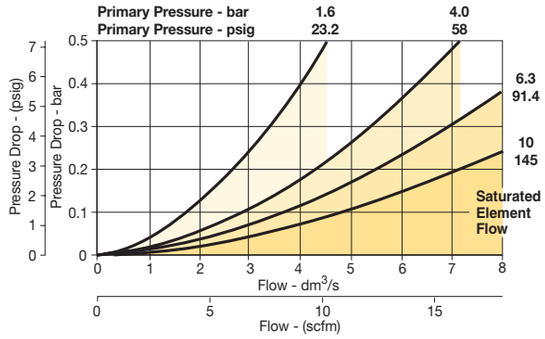

P31 - 0.01 micron flow

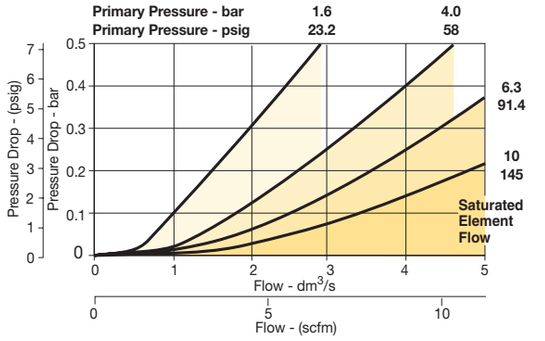

Dimensions mm (inches)

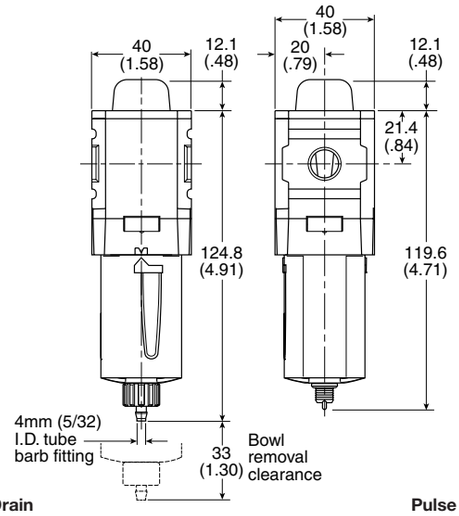

Manual Drain **Pulse Drain**

Repair and Service Kits

Plastic bowl / Bowl guard manual drain	**P31KB00BGM**
Metal bowl / w/o sight gauge manual drain	**P31KB00BMM**
Plastic bowl / Bowl guard pulse drain	**P31KB00BGB**
Metal bowl / w/o sight gauge pulse drain	**P31KB00BMB**
1µ coalescing filter element	**P31KA00ES9**
0.01µ coalescing filter element	**P31KA00ESC**
Activated carbon adsorber filter element	**P31KA00ESA**
C-bracket (fits to body)	**P31KA00MW**
T-bracket with body connector	**P31KA00MT**
Body connector	**P31KA00CB**
Differential pressure indicator (replacement)	**P31KB00RQ**

Compact Coalescing and Adsorber Filter - P32

Symbol

- Integral 1/4", 3/8" or 1/2" ports (NPT & BSPP)
- Removes liquid aerosols and sub micron particles
- Oil free air for critical applications, such as air gauging, pneumatic instrumentation and control
- Differential Pressure Indicator (DPI) standard on Coalescing Filters
- Positive bayonet latch to ensure correct & safe fitting
- Adsorbing activated carbon element removes oil vapors and most hydrocarbons

Note: To optimize the life of coalescing element, it is advisable to install a P32F pre-filter with a 5 micron element upstream of the coalescing filter.

To optimize the life of an Adsorber it is advisable to install a P32 Coalescing Filter upstream of the Adsorber. Adsorber element should be replaced approximately every 1000 hours of service.

Options:

P32FB [ ] [ ] [ ] [ ] [ ] **N**

Basic series	
Global modular compact coalescing filter	P32FB

Thread type	
BSPP	**1**
NPT	9

Port size	
1/4	**2**
3/8	**3**
1/2	**4**

Element	
0.01µ Element	**C**
0.01µ Element with DPI	**D**
1µ Element	9
1µ Element with DPI	Q
Adsorber	**A**

Bowl type	
G	**Poly bowl with bowl guard**
S	**Metal bowl with sight gauge**

Drain type	
M	**Manual drain**
A	**Auto drain**

Mounting	
N	**No bracket**

Bold items are most common.

Port size	Description	Flow‡ dm^3/s (scfm)	Max. bar (psig)	Height mm (inches)	Width mm (inches)	Depth mm (inches)	Part number†
1/4"	Poly bowl - 0.01 micron, manual drain	17 (36)	10 (150)	212.3 (8.36)	60 (2.36)	60 (2.36)	**P32FB12DGMN**
1/4"	Poly bowl - 0.01 micron, auto drain	17 (36)	10 (150)	206.3 (8.12)	60 (2.36)	60 (2.36)	**P32FB12DGAN**
1/4"	Metal bowl - 0.01 micron, manual drain	17 (36)	17 (250)	212.3 (8.36)	60 (2.36)	60 (2.36)	**P32FB12DSMN**
1/4"	Metal bowl - 0.01 micron, auto drain	17 (36)	17 (250)	206.3 (8.12)	60 (2.36)	60 (2.36)	**P32FB12DSAN**
3/8"	Poly bowl - 0.01 micron, manual drain	17 (36)	10 (150)	212.3 (8.36)	60 (2.36)	60 (2.36)	**P32FB13DGMN**
3/8"	Poly bowl - 0.01 micron, auto drain	17 (36)	10 (150)	206.3 (8.12)	60 (2.36)	60 (2.36)	**P32FB13DGAN**
3/8"	Metal bowl - 0.01 micron, manual drain	17 (36)	17 (250)	212.3 (8.36)	60 (2.36)	60 (2.36)	**P32FB13DSMN**
3/8'	Metal bowl - 0.01 micron, auto drain	17 (36)	17 (250)	206.3 (8.12)	60 (2.36)	60 (2.36)	**P32FB13DSAN**
1/2"	Poly bowl - 0.01 micron, manual drain	17 (36)	10 (150)	212.3 (8.36)	60 (2.36)	60 (2.36)	**P32FB14DGMN**
1/2"	Poly bowl - 0.01 micron, auto drain	17 (36)	10 (150)	206.3 (8.12)	60 (2.36)	60 (2.36)	**P32FB14DGAN**
1/2"	Metal bowl - 0.01 micron, manual drain	17 (36)	17 (250)	212.3 (8.36)	60 (2.36)	60 (2.36)	**P32FB14DSMN**
1/2"	Metal bowl - 0.01 micron, auto drain	17 (36)	17 (250)	206.3 (8.12)	60 (2.36)	60 (2.36)	**P32FB14DSAN**

† **Standard part numbers shown in bold. For other models refer to Options chart above.**
‡ Flow with 6.3 bar (91.3 psig) inlet pressure and 0.2 (3 psig) pressure drop.

Specifications

Flow capacity		
1.0 micron coalescing		25 dm³/s (53 scfm)
0.01 micron coalescing		17 dm³/s (36 scfm)
Activated carbon adsorber		40 dm³/s (85 scfm)
Operating temperature	Plastic bowl	-25°C to 52°C (-13°F to 125°F)
	Metal bowl	-25°C to 65.5°C (-13°F to 150°F)
Max. supply pressure	Plastic bowl	10 bar (150 psig)
	Metal bowl	17 bar (250 psig)
Standard filtration		1.0 and 0.01 micron
Adsorber	Max. oil carryover (ppm w/w)	0.003 @ 21°C (70°F)
Useful retention†		51 cm³ (1.7 US oz.)
Port size	BSPP / NPT	1/4, 3/8, 1/2
Weight		0.32 kg (0.71 lbs)

Inlet pressure 6.3 bar (91.3 psig), Pressure drop 0.2 bar (3 psig), Saturated Element.

† Useful retention refers to volume below the quiet zone baffle.

Flow Charts

P32 - 1.0 micron flow

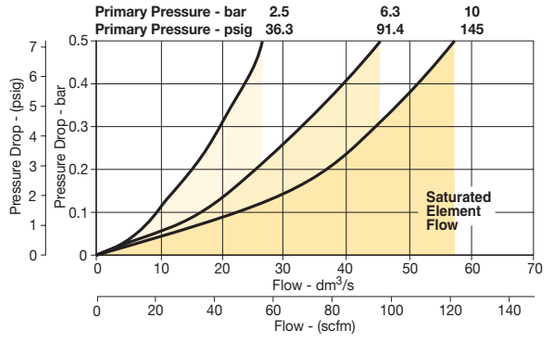

P32 - 0.01 micron flow

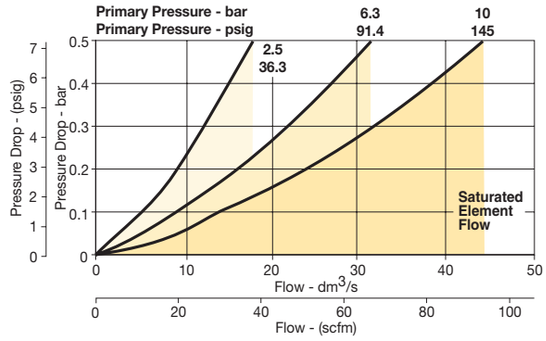

Dimensions mm (inches)

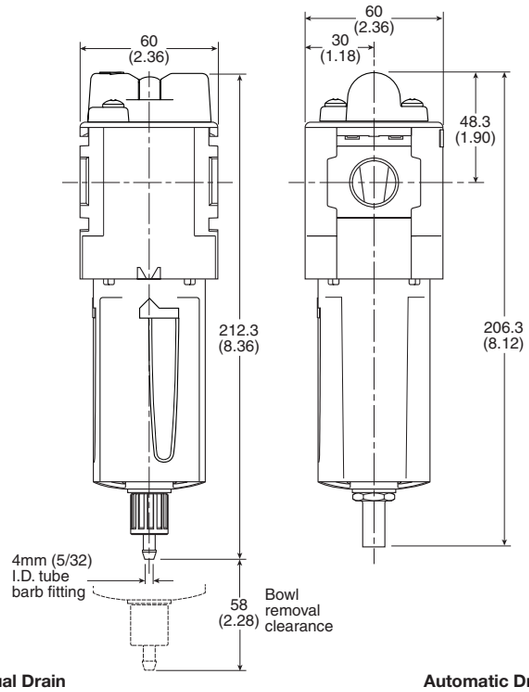

Manual Drain **Automatic Drain**

Material Specifications

Body		Aluminum
Body cap		ABS
Bowls	Plastic bowl	Polycarbonate
	Metal bowl	Aluminum
Filter element	1.0 and .01 micron	Borosilicate cloth
Adsorber		Activated carbon
Seals		Nitrile
Sight gauge	Metal bowl	Polycarbonate

Repair and Service Kits

Plastic bowl / Bowl guard manual drain	**P32KB00BGM**
Metal bowl / Sight gauge manual drain	**P32KB00BSM**
Auto drain	**P32KA00DA**
1µ coalescing filter element	**P32KA00ES9**
0.01µ coalescing filter element	**P32KA00ESC**
Activated carbon adsorber filter element	**P32KA00ESA**
L-bracket (fits to body)	**P32KA00ML**
T-bracket (fits to body connector)	**P32KA00MB**
T-bracket with body connector	**P32KA00MT**
Body connector	**P32KA00CB**
Differential pressure indicator (replacement)	**P32KA00RQ**

Standard Coalescing and Adsorber Filter - P33

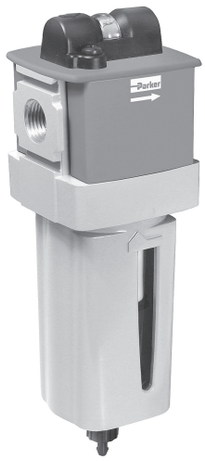

Symbol

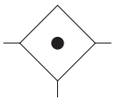

- Integral 1/2" or 3/4" ports (NPT & BSPP)
- Removes liquid aerosols and sub micron particles
- Oil free air for critical applications, such as air gauging, pneumatic instrumentation and control
- Differential Pressure Indicator (DPI) standard on Coalescing Filters
- Positive bayonet latch to ensure correct & safe fitting
- Adsorbing activated carbon element removes oil vapors and most hydrocarbons

Note: To optimize the life of coalescing element, it is advisable to install a P33F pre-filter with a 5 micron element upstream of the coalescing filter.

To optimize the life of an Adsorber it is advisable to install a P33 Coalescing Filter upstream of the Adsorber. Adsorber element should be replaced approximately every 1000 hours of service.

Options:

P33FA [ ] [ ] [ ] [ ] [ ] **N**

Basic series	
Global modular standard coalescing filter	P33FA

Thread type	
BSPP	1
NPT	9

Port size	
1/2	4
3/4	6

Element	
0.01µ Element	C
0.01µ Element with DPI	D
1µ Element	9
1µ Element with DPI	Q
Adsorber	A

Bowl type	
G	Poly bowl with bowl guard
S	Metal bowl with sight gauge

Drain type	
M	Manual drain
A	Auto drain

Mounting	
N	No bracket

Bold items are most common.

Port size	Description	Flow‡ dm^3/s (scfm)	Max. bar (psig)	Height mm (inches)	Width mm (inches)	Depth mm (inches)	Part number†
1/2"	Poly bowl - 0.01 micron, manual drain	32 (68)	10 (150)	235 (9.25)	73 (2.87)	73 (2.87)	**P33FA14DGMN**
1/2"	Poly bowl - 0.01 micron, auto drain	32 (68)	10 (150)	229 (9.02)	73 (2.87)	73 (2.87)	**P33FA14DGAN**
1/2"	Metal bowl - 0.01 micron, manual drain	32 (68)	17 (250)	235 (9.25)	73 (2.87)	73 (2.87)	**P33FA14DSMN**
1/2"	Metal bowl - 0.01 micron, auto drain	32 (68)	17 (250)	229 (9.02)	73 (2.87)	73 (2.87)	**P33FA14DSAN**
3/4"	Poly bowl - 0.01 micron, manual drain	32 (68)	10 (150)	235 (9.25)	73 (2.87)	73 (2.87)	**P33FA16DGMN**
3/4"	Poly bowl - 0.01 micron, auto drain	32 (68)	10 (150)	229 (9.02)	73 (2.87)	73 (2.87)	**P33FA16DGAN**
3/4"	Metal bowl - 0.01 micron, manual drain	32 (68)	17 (250)	235 (9.25)	73 (2.87)	73 (2.87)	**P33FA16DSMN**
3/4"	Metal bowl - 0.01 micron, auto drain	32 (68)	17 (250)	229 (9.02)	73 (2.87)	73 (2.87)	**P33FA16DSAN**

† **Standard part numbers shown in bold. For other models refer to Options chart above.**
‡ Flow with 6.3 bar (91.3 psig) inlet pressure and 0.2 (3 psig) pressure drop.

Specifications

Flow capacity		
1.0 micron coalescing		32 dm³/s (68 scfm)
0.01 micron coalescing		20 dm³/s (42 scfm)
Activated carbon adsorber		34 dm³/s (72 scfm)
Operating temperature	Plastic bowl	-25°C to 52°C (-13°F to 125°F)
	Metal bowl	-25°C to 65.5°C (-13°F to 150°F)
Max. supply pressure	Plastic bowl	10 bar (150 psig)
	Metal bowl	17 bar (250 psig)
Standard filtration		1.0 and 0.01 micron
Adsorber	Max. oil carryover (ppm w/w)	0.003 @ 21°C (70°F)
Useful retention†		85 cm³ (2.8 US oz.)
Port size	BSPP / NPT	1/2, 3/4
Weight		0.50 kg (1.10 lbs)

Inlet pressure 6.3 bar (91.3 psig), Pressure drop 0.2 bar (3 psig), Saturated Element.

† Useful retention refers to volume below the quiet zone baffle.

Flow Charts

P33 - 1.0 micron flow

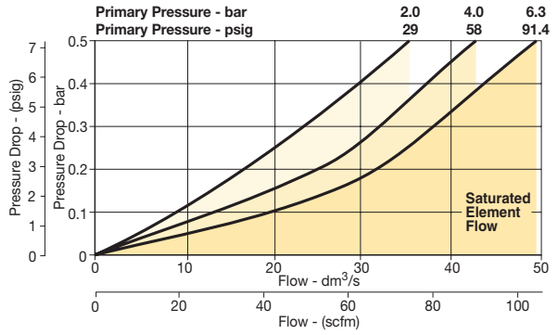

P33 - 0.01 micron flow

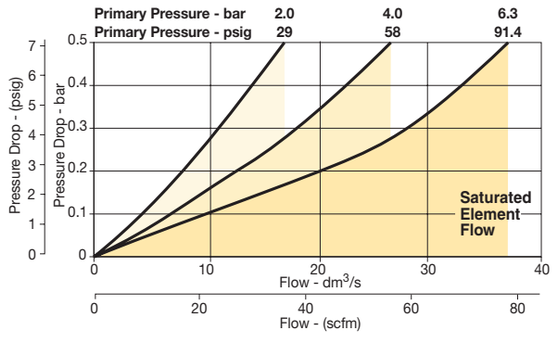

Dimensions mm (inches)

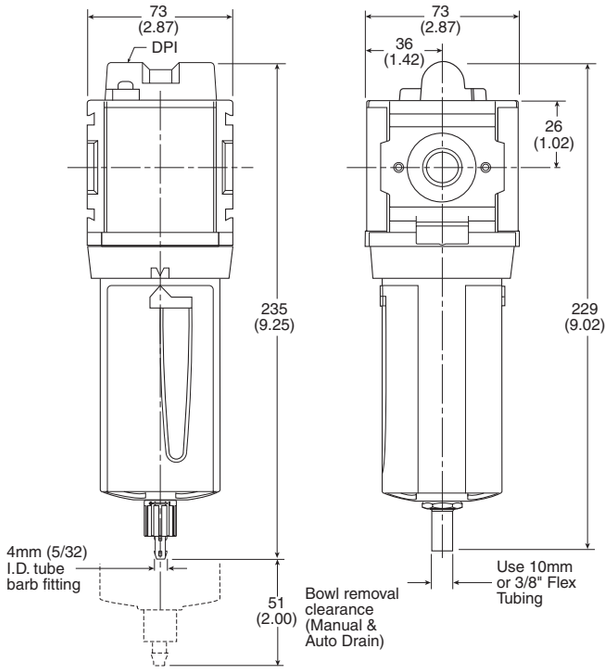

Material Specifications

Body		Aluminum
Body cap		ABS
Bowls	Plastic bowl	Polycarbonate
	Metal bowl	Aluminum
Filter element	1.0 and .01 micron	Borosilicate cloth
Adsorber		Activated carbon
Seals		Nitrile
Sight gauge	Metal bowl	Polycarbonate

Repair and Service Kits

Plastic bowl / Bowl guard manual drain	**P33KA00BGM**
Metal bowl / Sight gauge manual drain	**P33KA00BSM**
Auto drain	**P32KA00DA**
1µ coalescing filter element	**P33KA00ES9**
0.01µ coalescing filter element	**P33KA00ESC**
Activated carbon adsorber filter element	**P33KA00ESA**
L-bracket (fits to body)	**P33KA00ML**
T-bracket (fits to body connector)	**P32KA00MB**
T-bracket with body connector	**P32KA00MT**
Body connector	**P32KA00CB**
Differential pressure indicator (replacement)	**P32KA00RQ**

Mini Regulator - P31

Symbols

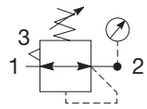

Self relieving regulator with gauge

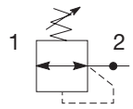

Non relieving regulator

- Integral 1/4" ports (NPT & BSPP)
- Robust but lightweight aluminum construction
- Secondary pressure ranges 0-2 bar (0-30 psig), 0-4 bar, (0-60 psig), 0-8 bar (0-125 psig), 0-16 bar (0-232 psig)
- Secondary aspiration plus balanced poppet provides quick response and accurate pressure regulation.
- Relieving & Non-relieving types
- Non-rising knob

Options:

P31RB [ ] 2 [ ] N [ ] P

Basic series

Global modular mini regulator	**P31RB**

Thread type

BSPP	**1**
NPT	9

Port size

1/4	**2**

Relief

Relieving	**B**
Non-relieving	N
Reverse flow / Relieving	R

Mounting

P	**Plastic panel mount nut**

Adjustment range

With square gauge		With round gauge	
psig	**bar**	Z	2 bar; 30 psig; 0.2 MPa
1 = 30*	**V = 2***	M	4 bar; 60 psig; 0.4 MPa
3 = 60	**S = 4**	G	8 bar; 125 psig; 0.8 MPa
5 = 125	**T = 8**	J	16 bar; 232 psig; 1.6 MPa
		Without gauge	
		Y	**2 bar; 30 psig; 0.2 MPa**
		L	**4 bar; 60 psig; 0.4 MPa**
		N	**8 bar; 125 psig; 0.8 MPa**
		H	**16 bar; 232 psig; 1.6 MPa**

* Unit comes with 0-4 bar or 0-60 psig gauge respectively.

Bar gauges fitted to BSPP
PSI gauges fitted to NPT

Bold items are most common.

Port size	Description	Flow‡ dm^3/s (scfm)	Max. bar (psig)	Height mm (inches)	Width mm (inches)	Depth mm (inches)	Part number†
1/4"	8 bar (125 psig) relieving	32 (68)	20 (300)	104.1 (4.1)	40 (1.58)	40 (1.58)	**P31RB12BNNP**
1/4"	8 bar (125 psig) + gauge	32 (68)	20 (300)	104.1 (4.1)	40 (1.58)	61.3 (2.41)	**P31RB12BNTP**

† **Standard part numbers shown in bold. For other models refer to Options chart above.**
‡ Flow with 10 bar (145 psig) inlet pressure, 6.3 bar (91.3) psig) set pressure and 1 bar (14.5 psig) pressure drop.

Specifications

Flow capacity*	1/4	32 dm³/s (68 scfm)
Operating temperature†		-20°C to 65.5°C (-4°F to 150°F)
Max. supply pressure		20 bar (300 psig)
Adjusting range pressure		0-2 bar (30 psig) 0-4 bar (60 psig) 0-8 bar (125 psig) 0-16 bar (232 psig)
Port size	BSPP / NPT	1/4
Gauge port (2 ea.)**	BSPP / NPT	1/8
Weight		0.17 kg (0.37 lbs)

* Inlet pressure 10 bar (145 psig). Secondary pressure 6.3 bar (91.3 psig).

** Non-gauge option only.

† Units with square gauges: -15°C to 65.5°C (5°F to 150°F)

Flow Charts

1/4 Regulator

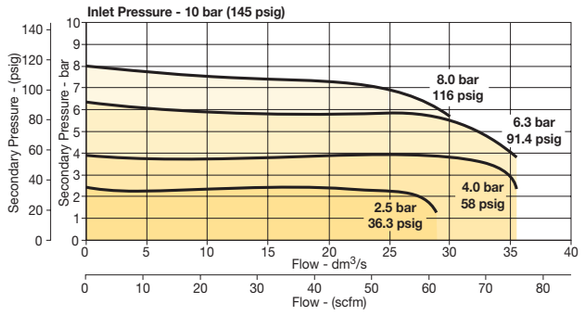

Material Specifications

Body	Aluminum
Adjustment knob	Acetal
Bonnet	PBT
Diaphragm assembly	Brass / Nitrile
Valve assembly	Brass / Nitrile
Springs	Steel
Seals	Nitrile
Panel nut	Acetal

Repair and Service Kits

Panel mount nut - aluminum	**P31KA00MM**
Panel mount nut - plastic	**P31KA00MP**
Angle bracket (attaches via panel nut)	**P31KB00MR**
C-bracket (fits to body)	**P31KA00MW**
T-bracket with body connector	**P31KA00MT**
Body connector	**P31KA00CB**

Dimensions mm (inches)

NOTE: 30 mm (1.20 in.) hole required for panel nut mounting.

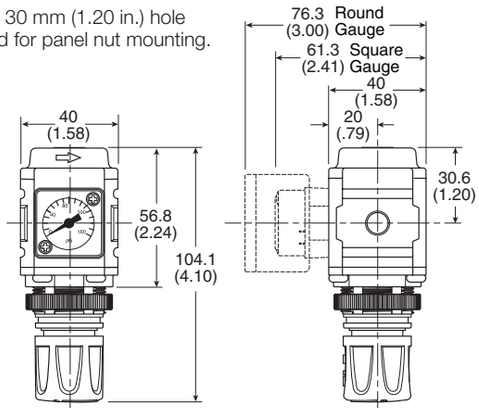

⚠ WARNING

Product rupture can cause serious injury.
Do not connect regulator to bottled gas.
Do not exceed Maximum primary pressure rating.

CAUTION:

REGULATOR PRESSURE ADJUSTMENT – The working range of knob adjustment is designed to permit outlet pressures within their full range. Pressure adjustment beyond this range is also possible because the knob is not a limiting device. This is a common characteristic of most industrial regulators, and limiting devices may be obtained only by special design. For best performance, regulated pressure should always be set by increasing the pressure up to the desired setting.

Gauges

Square flush mount gauge

0-4 bar	**K4511SCR04B**
0-11 bar	**K4511SCR11B**
0-60 psig	**K4511SCR060**
0-160 psig	**K4511SCR160**

Square with adapter kit

0-4 bar	**P6G-PR11040**
0-11 bar	**P6G-PR11110**
0-60 psig	**P6G-PR90060**
0-160 psig	**P6G-PR90160**

40mm Round 1/8" center back mount

0-30 psig / 0-2 bar	**P3D-KAB1AYN**
0-60 psig / 0-4 bar	**P3D-KAB1ALN**
0-160 psig / 0-11 bar	**P3D-KAB1ANN**
0-300 psig / 0-20 bar	**P3D-KAB1AHN**

For best performance, regulated pressure should always be set by increasing the pressure up to the desired setting.

Mini Common - P1 Regulator - P31

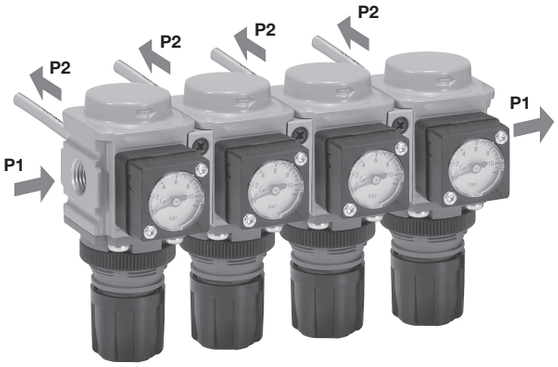

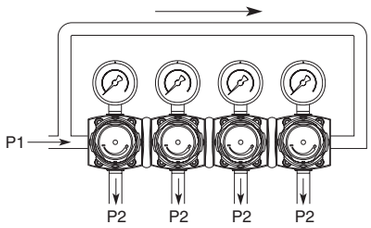

Symbols

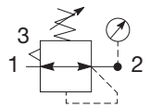

Self relieving regulator with gauge

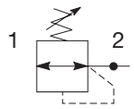

Non relieving regulator

- Manifold style regulator with line pressure on both sides
- Pressure output is at front or rear
- Inlet port 1/4" (NPT & BSPP)
- Working port 1/8"
- Robust construction
- Secondary pressure ranges 0-2 bar (0-30 psig), 0-4 bar, (0-60 psig), 0-8 bar (0-125 psig), 0-16 bar (0-232 psig)
- Secondary aspiration plus balanced poppet provides quick response and accurate pressure regulation
- Relieving & Non-relieving types
- Non-rising knob

Options:

P31HB [ ] 2 [ ] N [ ] P

Basic series

Global modular mini common regulator	P31HB

Thread type

BSPP	**1**
NPT	9

Port size †

1/4	**2**

† Working port 1/8".

Relief

Relieving	**B**
Non-relieving	N
Reverse flow / Relieving	R

Mounting

P	**Plastic panel mount nut**

Adjustment range

With square gauge		Without gauge	
psig	bar		
1 = 30*	V = 2*	**Y**	**2 bar; 30 psig; 0.2 MPa**
3 = 60	S = 4	**L**	**4 bar; 60 psig; 0.4 MPa**
5 = 125	T = 8	**N**	**8 bar; 125 psig; 0.8 MPa**
		H	**16 bar; 232 psig; 1.6 MPa**

* Unit comes with 0-4 bar or 0-60 psig gauge respectively.

Bar gauges fitted to BSPP
PSI gauges fitted to NPT

Bold items are most common.

Port size	Description	Flow‡ dm^3/s (scfm)	Max. bar (psig)	Height mm (inches)	Width mm (inches)	Depth mm (inches)	Part number†
1/4"	8 bar (125 psig) relieving	20 (42)	20 (300)	104.1 (4.1)	40 (1.58)	40 (1.58)	**P31HB12BNNP**

† **Standard part numbers shown in bold. For other models refer to Options chart above.**
‡ Flow with 10 bar (145 psig) inlet pressure, 6.3 bar (91.3) psig) set pressure and 1 bar (14.5 psig) pressure drop.

Specifications

Flow capacity*	1/4	20 dm³/s (42 scfm)
Operating temperature		-20°C to 65.5°C (-4°F to 150°F)
Max. supply pressure		20 bar (300 psig)
Adjusting range pressure		0-2 bar (30 psig) 0-4 bar (60 psig) 0-8 bar (125 psig) 0-16 bar (232 psig)
P1 Port size (Inlet / Outlet)	BSPP / NPT	1/4
P2 Regulated ports (2 ea.)	BSPP / NPT	1/8
Weight		0.30 kg (0.66 lbs)

* Inlet pressure 10 bar (145 psig). Secondary pressure 6.3 bar (91.3 psig).

Materials of Construction

Body	Aluminum
Adjustment knob	Acetal
Bonnet	33% Glass-filled PBT
Diaphragm assembly	Brass / Nitrile
Valve assembly	Brass / Nitrile

Flow Charts

1/4 Common Regulator

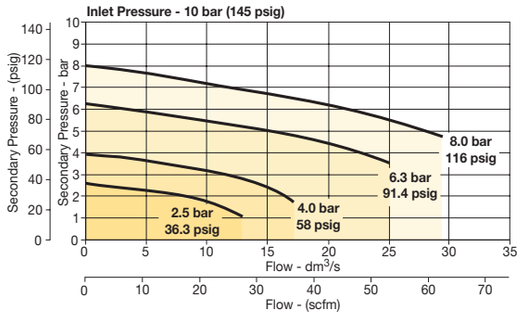

Dimensions mm (inches)

NOTE: 30 mm (1.20 in.) hole required for panel nut mounting.

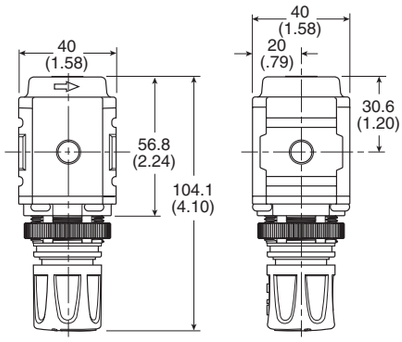

⚠ WARNING

Product rupture can cause serious injury.
Do not connect regulator to bottled gas.
Do not exceed Maximum primary pressure rating.

CAUTION:

REGULATOR PRESSURE ADJUSTMENT – The working range of knob adjustment is designed to permit outlet pressures within their full range. Pressure adjustment beyond this range is also possible because the knob is not a limiting device. This is a common characteristic of most industrial regulators, and limiting devices may be obtained only by special design. For best performance, regulated pressure should always be set by increasing the pressure up to the desired setting.

Repair and Service Kits

Panel mount nut - aluminum	**P31KA00MM**
Panel mount nut - plastic	**P31KA00MP**
Angle bracket (attaches via panel nut)	**P31KB00MR**
T-bracket with body connector	**P31KA00MT**
Body connector	**P31KA00CB**

Gauges

Square with adapter kit

0-4 bar	**P6G-PR11040**
0-11 bar	**P6G-PR11110**
0-60 psig	**P6G-PR90060**
0-160 psig	**P6G-PR90160**

40mm Round 1/8" center back mount

0-30 psig / 0-2 bar	**P3D-KAB1AYN**
0-60 psig / 0-4 bar	**P3D-KAB1ALN**
0-160 psig / 0-11 bar	**P3D-KAB1ANN**
0-300 psig / 0-20 bar	**P3D-KAB1AHN**

For best performance, regulated pressure should always be set by increasing the pressure up to the desired setting.

Compact Regulator – P32

Symbols

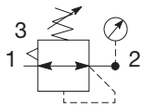

Self relieving regulator with gauge

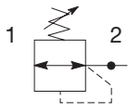

Non relieving regulator

- Integral 1/4", 3/8" or 1/2" ports (NPT & BSPP)
- Robust but lightweight aluminum construction
- Secondary pressure ranges 0-2 bar (0-30 psig), 0-4 bar, (0-60 psig), 0-8 bar (0-125 psig), 0-17 bar (0-250 psig)
- Secondary aspiration plus balanced poppet provides quick response and accurate pressure regulation
- Relieving & Non-relieving types
- Non-rising knob

Options:

P32RB [ ] [ ] [ ] **N** [ ] **P**

Basic series

Global modular compact regulator	P32RB

Thread type

BSPP	**1**
NPT	9

Port size

1/4	**2**
3/8	**3**
1/2	**4**

Relief

Relieving	**B**
Non-relieving	N

Note: Regulators will reverse flow as standard.

Adjustment range

With square gauge		With round gauge	
psig	bar		
1 = 30*	V = 2*	**Z**	**2 bar; 30 psig; 0.2 MPa**
3 = 60	S = 4	**M**	**4 bar; 60 psig; 0.4 MPa**
5 = 125	T = 8	**G**	**8 bar; 125 psig; 0.8 MPa**
		J	**17 bar; 250 psig; 1.7 MPa**
		Without gauge	
		Y	**2 bar; 30 psig; 0.2 MPa**
		L	**4 bar; 60 psig; 0.4 MPa**
		N	**8 bar; 125 psig; 0.8 MPa**
		H	**17 bar; 250 psig; 1.7 MPa**

Mounting

P	**Plastic panel mount nut**

Bold items are most common.

Port size	Description	Flow‡ dm^3/s (scfm)	Max. bar (psig)	Height mm (inches)	Width mm (inches)	Depth mm (inches)	Part number†
1/4"	8 bar (125 psig) relieving	70 (148)	20 (300)	136 (5.4)	60 (2.36)	60 (2.36)	**P32RB12BNNP**
1/4"	8 bar (125 psig) relieving + gauge	70 (148)	20 (300)	136 (5.4)	60 (2.36)	93 (3.66)	**P32RB12BNGP**
3/8"	8 bar (125 psig) relieving	78 (165)	20 (300)	136 (5.4)	60 (2.36)	60 (2.36)	**P32RB13BNNP**
3/8"	8 bar (125 psig) relieving + gauge	78 (165)	20 (300)	136 (5.4)	60 (2.36)	93 (3.66)	**P32RB13BNGP**
1/2"	8 bar (125 psig) relieving	78 (165)	20 (300)	136 (5.4)	60 (2.36)	60 (2.36)	**P32RB14BNNP**
1/2"	8 bar (125 psig) relieving + gauge	78 (165)	20 (300)	136 (5.4)	60 (2.36)	93 (3.66)	**P32RB14BNGP**

† **Standard part numbers shown in bold. For other models refer to Options chart above.**
‡ Flow with 10 bar (145 psig) inlet pressure, 6.3 bar (91.3) psig) set pressure and 1 bar (14.5 psig) pressure drop.

CAUTION:

REGULATOR PRESSURE ADJUSTMENT – The working range of knob adjustment is designed to permit outlet pressures within their full range. Pressure adjustment beyond this range is also possible because the knob is not a limiting device. This is a common characteristic of most industrial regulators, and limiting devices may be obtained only by special design. For best performance, regulated pressure should always be set by increasing the pressure up to the desired setting.

⚠ WARNING

Product rupture can cause serious injury.
Do not connect regulator to bottled gas.
Do not exceed Maximum primary pressure rating.

Specifications

Flow capacity*	1/4	70 dm³/s (148 scfm)
	3/8	78 dm³/s (165 scfm)
	1/2	78 dm³/s (165 scfm)
Operating temperature		-25°C to 65.5°C (-13°F to 150°F)
Max. supply pressure		20 bar (300 psig)
Adjusting range pressure		0-2 bar (30 psig) 0-4 bar (60 psig) 0-8 bar (125 psig) 0-17 bar (250 psig)
Port size	BSPP / NPT	1/4, 3/8, 1/2
Gauge port (2 ea.)	BSPP / NPT	1/4
Weight		0.41 kg (0.90 lbs)

* Inlet pressure 10 bar (145 psig). Secondary pressure 6.3 bar (91.3 psig).

Material Specifications

Body		Aluminum
Adjustment knob		Acetal
Bonnet		33% Glass-filled nylon
Diaphragm assembly		Nitrile / Zinc
Valve assembly		Brass / Nitrile
Springs	Main regulating valve	Steel S.S.
Seals		Nitrile
Panel nut		Acetal

Dimensions mm (inches)

NOTE: 48 mm (1.90 in.) hole required for panel nut mounting.

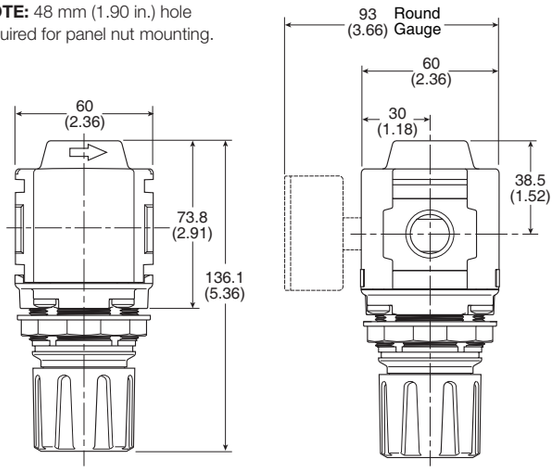

Repair and Service Kits

Panel mount nut - aluminum	**P32KA00MM**
Panel mount nut - plastic	**P32KA00MP**
Angle bracket (attaches via panel nut)	**P32KB00MR**
T-bracket with body connector	**P32KA00MT**
T-bracket	**P32KA00MB**
Body connector	**P32KA00CB**

Flow Charts

1/4 Regulator

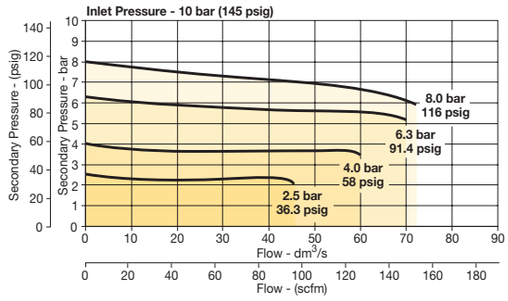

3/8 Regulator

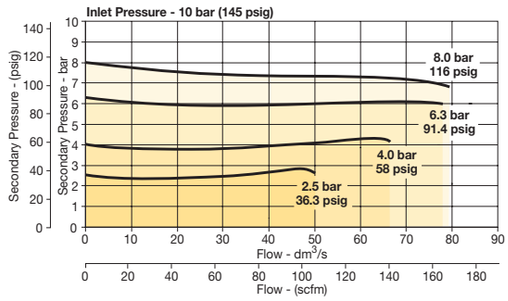

1/2 Regulator

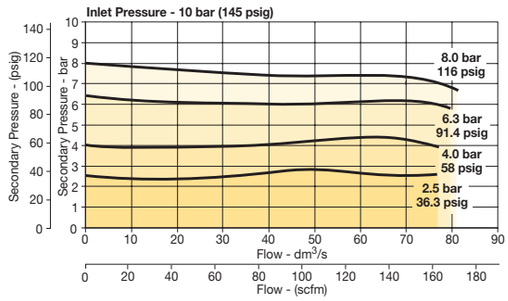

Gauges

50mm (2") Round 1/4" center back mount	
0-60 psig / 0-4 bar	**P6G-ERB2040**
0-160 psig / 0-11 bar	**P6G-ERB2110**
0-300 psig / 0-20 bar	**P6G-ERB2200**
Square flush mount gauge	
0-4 bar	**K4511SCR04B**
0-11 bar	**K4511SCR11B**
0-60 psig	**K4511SCR060**
0-160 psig	**K4511SCR160**
Square with adapter kit	
0-4 bar	**P6G-PR11040**
0-11 bar	**P6G-PR11110**
0-60 psig	**P6G-PR90060**
0-160 psig	**P6G-PR90160**

For best performance, regulated pressure should always be set by increasing the pressure up to the desired setting.

Compact Semi-Precision Regulator – P32

Symbols

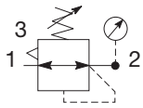

Self relieving regulator with gauge

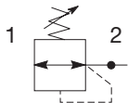

Non relieving regulator

- Integral 1/4", 3/8" or 1/2" ports (NPT & BSPP)
- Robust but lightweight aluminum construction
- Secondary pressure ranges 0-2 bar (0-30 psig), 0-4 bar, (0-60 psig), 0-8 bar (0-125 psig), 0-17 bar (0-250 psig)
- Secondary aspiration plus balanced poppet provides quick response and accurate pressure regulation
- Relieving & Non-relieving types
- Non-rising knob

Options:

P32RB [ ] [ ] [ ] **N** [ ] **P**

Basic series	
Global modular compact regulator	P32RB

Thread type	
BSPP	1
NPT	9

Port size	
1/4	2
3/8	3
1/2	4

Relief	
Relieving	**P**
Non-relieving	E

Note: Regulators will reverse flow as standard.

Adjustment range	
	With round gauge
Z	2 bar; 30 psig; 0.2 MPa
M	4 bar; 60 psig; 0.4 MPa
G	8 bar; 125 psig; 0.8 MPa
J	17 bar; 250 psig; 1.7 MPa
	Without gauge
Y	2 bar; 30 psig; 0.2 MPa
L	4 bar; 60 psig; 0.4 MPa
N	8 bar; 125 psig; 0.8 MPa
H	17 bar; 250 psig; 1.7 MPa

Mounting	
P	Plastic panel mount nut

Bold items are most common.

Port size	Description	Flow‡ dm^3/s (scfm)	Max. bar (psig)	Height mm (inches)	Width mm (inches)	Depth mm (inches)	Part number†
1/4"	8 bar (125 psig) relieving	25 (53)	20 (300)	136 (5.4)	60 (2.36)	60 (2.36)	**P32RB12PNNP**
1/4"	8 bar (125 psig) relieving + gauge	25 (53)	20 (300)	136 (5.4)	60 (2.36)	93 (3.66)	**P32RB12PNGP**
3/8"	8 bar (125 psig) relieving	25 (53)	20 (300)	136 (5.4)	60 (2.36)	60 (2.36)	**P32RB13PNNP**
3/8"	8 bar (125 psig) relieving + gauge	25 (53)	20 (300)	136 (5.4)	60 (2.36)	93 (3.66)	**P32RB13PNGP**
1/2"	8 bar (125 psig) relieving	25 (53)	20 (300)	136 (5.4)	60 (2.36)	60 (2.36)	**P32RB14PNNP**
1/2"	8 bar (125 psig) relieving + gauge	25 (53)	20 (300)	136 (5.4)	60 (2.36)	93 (3.66)	**P32RB14PNGP**

† **Standard part numbers shown in bold. For other models refer to Options chart above.**
‡ Flow with 10 bar (145 psig) inlet pressure, 6.3 bar (91.3) psig) set pressure and 1 bar (14.5 psig) pressure drop.

CAUTION:

REGULATOR PRESSURE ADJUSTMENT – The working range of knob adjustment is designed to permit outlet pressures within their full range. Pressure adjustment beyond this range is also possible because the knob is not a limiting device. This is a common characteristic of most industrial regulators, and limiting devices may be obtained only by special design. For best performance, regulated pressure should always be set by increasing the pressure up to the desired setting.

⚠ WARNING

Product rupture can cause serious injury.
Do not connect regulator to bottled gas.
Do not exceed Maximum primary pressure rating.

Specifications

Flow capacity*	1/4	25 dm^3/s (53 scfm)
	3/8	25 dm^3/s (53 scfm)
	1/2	25 dm^3/s (53 scfm)
Effect of supply pressure variation		0.04 bar (0.6 PSIG) for 1.7 bar (25 PSIG) change in P1
Operating temperature		-25°C to 65.5°C (-13°F to 150°F)
Max. supply pressure		20 bar (300 psig)
Adjusting range pressure		0-2 bar (30 psig) 0-4 bar (60 psig) 0-8 bar (125 psig) 0-17 bar (250 psig)
Port size	BSPP / NPT	1/4, 3/8, 1/2
Gauge port (2 ea.)	BSPP / NPT	1/4
Weight		0.41 kg (0.90 lbs)

* Inlet pressure 10 bar (145 psig). Secondary pressure 6.3 bar (91.3 psig).

Material Specifications

Body		Aluminum
Adjustment knob		Acetal
Bonnet		33% Glass-filled nylon
Diaphragm assembly		Nitrile / Zinc
Valve assembly		Brass / Nitrile
Springs	Main regulating valve	Steel S.S.
Seals		Nitrile
Panel nut		Acetal

Dimensions mm (inches)

NOTE: 48 mm (1.90 in.) hole required for panel nut mounting.

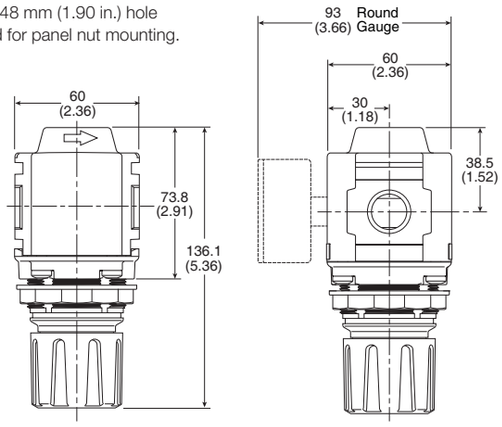

Repair and Service Kits

Panel mount nut - aluminum	**P32KA00MM**
Panel mount nut - plastic	**P32KA00MP**
Angle bracket (attaches via panel nut)	**P32KB00MR**
T-bracket with body connector	**P32KA00MT**
T-bracket	**P32KA00MB**
Body connector	**P32KA00CB**

Flow Charts

1/4 Regulator

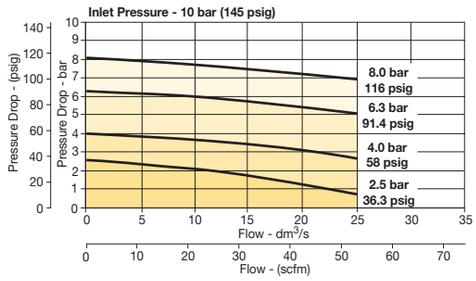

3/8 Regulator

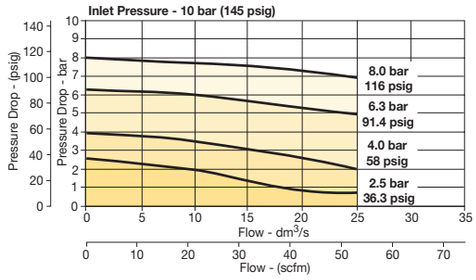

1/2 Regulator

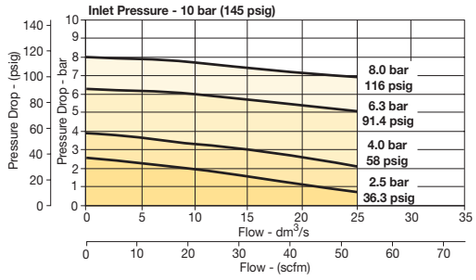

Gauges

50mm (2") Round 1/4" center back mount

0-60 psig / 0-4 bar	**P6G-ERB2040**
0-160 psig / 0-11 bar	**P6G-ERB2110**
0-300 psig / 0-20 bar	**P6G-ERB2200**

For best performance, regulated pressure should always be set by increasing the pressure up to the desired setting.

Compact Common - P1 Regulator - P32

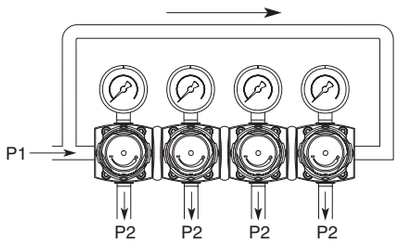

Symbols

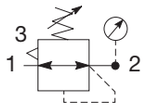

Self relieving regulator with gauge

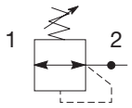

Non relieving regulator

- Manifold style regulator with line pressure on both sides.
- Pressure output is at front or rear.
- Inlet ports 1/4", 3/8" or 1/2" (NPT & BSPP)
- Working port 1/4"
- Robust construction
- Secondary pressure ranges 0-2 bar (0-30 psig), 0-4 bar, (0-60 psig), 0-8 bar (0-125 psig), 0-17 bar (0-250 psig)
- Secondary aspiration plus balanced poppet provides quick response and accurate pressure regulation
- Relieving & Non-relieving types
- Non-rising knob

Options:

P32HB [ ] [ ] [ ] N [ ] P

Basic series

Global modular compact regulator	P32HB

Thread type

BSPP	**1**
NPT	9

Port size †

1/4	**2**
3/8	**3**
1/2	**4**

† Working port 1/4".

Relief

Relieving	**B**
Non-relieving	N

Note: Regulators will reverse flow as standard.

Mounting

P	**Plastic panel mount nut**

Adjustment range

With square gauge		With round gauge	
psig	bar	Z	2 bar; 30 psig; 0.2 MPa
1 = 30*	V = 2*	M	4 bar; 60 psig; 0.4 MPa
3 = 60	S = 4	G	8 bar; 125 psig; 0.8 MPa
5 = 125	T = 8	J	17 bar; 250 psig; 1.7 MPa
		Without gauge	
		Y	**2 bar; 30 psig; 0.2 MPa**
		L	**4 bar; 60 psig; 0.4 MPa**
		N	**8 bar; 125 psig; 0.8 MPa**
		H	**17 bar; 250 psig; 1.7 MPa**

* Unit comes with 0-4 bar or 0-60 psig gauge respectively.

Bold items are most common.

Port size	Description	Flow‡ dm^3/s (scfm)	Max. bar (psig)	Height mm (inches)	Width mm (inches)	Depth mm (inches)	Part number†
1/4"	8 bar (125 psig) relieving	30 (64)	20 (300)	136 (5.4)	60 (2.36)	60 (2.36)	**P32HB12BNNP**
3/8"	8 bar (125 psig) relieving	30 (64)	20 (300)	136 (5.4)	60 (2.36)	60 (2.36)	**P32HB13BNNP**
1/2"	8 bar (125 psig) relieving	30 (64)	20 (300)	136 (5.4)	60 (2.36)	60 (2.36)	**P32HB14BNNP**

† **Standard part numbers shown in bold. For other models refer to Options chart above.**
‡ Flow with 10 bar (145 psig) inlet pressure, 6.3 bar (91.3) psig) set pressure and 1 bar (14.5 psig) pressure drop.

Specifications

Flow capacity*	1/4	30 dm³/s (64 scfm)
	3/8	30 dm³/s (64 scfm)
	1/2	30 dm³/s (64 scfm)
Operating temperature		-25°C to 65.5°C (-13°F to 150°F)
Max. supply pressure		20 bar (300 psig)
Adjusting range pressure		0-2 bar (30 psig) 0-4 bar (60 psig) 0-8 bar (125 psig) 0-17 bar (250 psig)
Port size	BSPP / NPT	1/4, 3/8, 1/2
Gauge port (2 ea.)	BSPP / NPT	1/4
Weight		0.50 kg (1.10 lbs)

* Inlet pressure 10 bar (145 psig). Secondary pressure 6.3 bar (91.3 psig).

Material Specifications

Body		Aluminum
Adjustment knob		Acetal
Bonnet		33% Glass-filled nylon
Diaphragm assembly		Nitrile / Zinc
Valve assembly		Brass / Nitrile
Springs	Main regulating valve	Steel S.S.
Seals		Nitrile
Panel nut		Acetal

Dimensions mm (inches)

NOTE: 48 mm (1.90 in.) hole required for panel nut mounting.

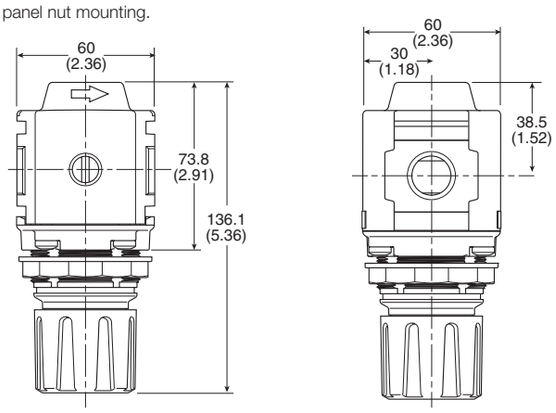

⚠ WARNING

Product rupture can cause serious injury.
Do not connect regulator to bottled gas.
Do not exceed Maximum primary pressure rating.

CAUTION:

REGULATOR PRESSURE ADJUSTMENT – The working range of knob adjustment is designed to permit outlet pressures within their full range. Pressure adjustment beyond this range is also possible because the knob is not a limiting device. This is a common characteristic of most industrial regulators, and limiting devices may be obtained only by special design. For best performance, regulated pressure should always be set by increasing the pressure up to the desired setting.

Flow Charts

P32 Common Port Regulator

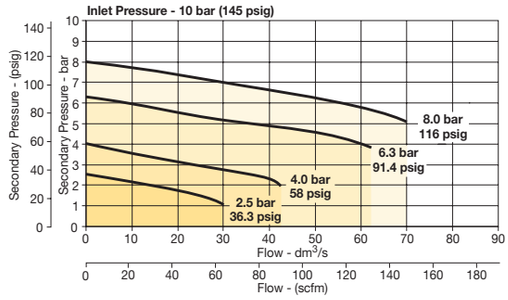

Repair and Service Kits

Panel mount nut - aluminum	**P32KA00MM**
Panel mount nut - plastic	**P32KA00MP**
Angle bracket (attaches via panel nut)	**P32KB00MR**
T-bracket with body connector	**P32KA00MT**
T-bracket	**P32KA00MB**
Body connector	**P32KA00CB**

Gauges

50mm (2") Round 1/4" center back mount	
0-60 psig / 0-4 bar	**P6G-ERB2040**
0-160 psig / 0-11 bar	**P6G-ERB2110**
0-300 psig / 0-20 bar	**P6G-ERB2200**
Square flush mount gauge	
0-4 bar	**K4511SCR04B**
0-11 bar	**K4511SCR11B**
0-60 psig	**K4511SCR060**
0-160 psig	**K4511SCR160**
Square with adapter kit	
0-4 bar	**P6G-PR11040**
0-11 bar	**P6G-PR11110**
0-60 psig	**P6G-PR90060**
0-160 psig	**P6G-PR90160**

For best performance, regulated pressure should always be set by increasing the pressure up to the desired setting.

Standard Regulator - P33

Symbols

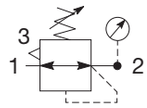

Self relieving regulator with gauge

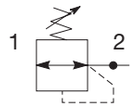

Non relieving regulator

- Integral 1/2" or 3/4" ports (NPT & BSPP)
- Robust but lightweight aluminum construction
- Secondary pressure ranges 0-2 bar (0-30 psig), 0-4 bar, (0-60 psig), 0-8 bar (0-125 psig), 0-17 bar (0-250 psig)
- Secondary aspiration plus balanced poppet provides quick response and accurate pressure regulation
- Relieving & Non-relieving types
- Non-rising knob

Options:

P33RA [ ] [ ] [ ] **N** [ ] **P**

Basic series	
Global modular standard regulator	P33RA

Thread type	
BSPP	**1**
NPT	9

Port size	
1/2	**4**
3/4	**6**

Relief	
Relieving	**B**
Non-relieving	N
Reverse flow-relieving	R

Adjustment range	
	With round gauge
Z	**2 bar; 30 psig; 0.2 MPa**
M	**4 bar; 60 psig; 0.4 MPa**
G	**8 bar; 125 psig; 0.8 MPa**
J	**17 bar; 250 psig; 1.7 MPa**
	Without gauge
Y	**2 bar; 30 psig; 0.2 MPa**
L	**4 bar; 60 psig; 0.4 MPa**
N	**8 bar; 125 psig; 0.8 MPa**
H	**17 bar; 250 psig; 1.7 MPa**

Mounting	
P	**Plastic panel mount nut**

Bold items are most common.

Port size	Description	Flow‡ dm^3/s (scfm)	Max. bar (psig)	Height mm (inches)	Width mm (inches)	Part number†
1/2"	8 bar (125 psig) relieving	110 (233)	20 (300)	149 (5.87)	73 (2.87)	**P33RA14BNNP**
1/2"	8 bar (125 psig) relieving + gauge	110 (233)	20 (300)	149 (5.87)	108 (4.27)	**P33RA14BNGP**
3/4"	8 bar (125 psig) relieving	110 (233)	20 (300)	149 (5.87)	73 (2.87)	**P33RA16BNNP**
3/4"	8 bar (125 psig) relieving + gauge	110 (233)	20 (300)	149 (5.87)	108 (4.27)	**P33RA16BNGP**

† **Standard part numbers shown in bold. For other models refer to Options chart above.**
‡ Flow with 10 bar (145 psig) inlet pressure, 6.3 bar (91.3) psig) set pressure and 1 bar (14.5 psig) pressure drop.

Specifications

Flow capacity*	1/2	110 dm³/s (233 scfm)
	3/4	110 dm³/s (233 scfm)
Operating temperature		-25°C to 65.5°C (-13°F to 150°F)
Max. supply pressure		20 bar (300 psig)
Adjusting range pressure		0-2 bar (30 psig) 0-4 bar (60 psig) 0-8 bar (125 psig) 0-17 bar (250 psig)
Port size	BSPP / NPT	1/2, 3/4
Gauge port (2 ea.)	BSPP / NPT	1/4
Weight		0.62 kg (1.37 lbs)

* Inlet pressure 10 bar (145 psig). Secondary pressure 6.3 bar (91.3 psig).

Material Specifications

Body		Aluminum
Adjustment knob		Acetal
Body cap		ABS
Bonnet		33% Glass-filled nylon
Diaphragm assembly		Nitrile / Zinc
Valve assembly		Brass / Nitrile
Springs	Main regulating valve	Steel S.S.
Seals		Nitrile
Panel nut		Acetal

Dimensions mm (inches)

NOTE: 61 mm (2.40 in.) hole required for panel nut mounting.

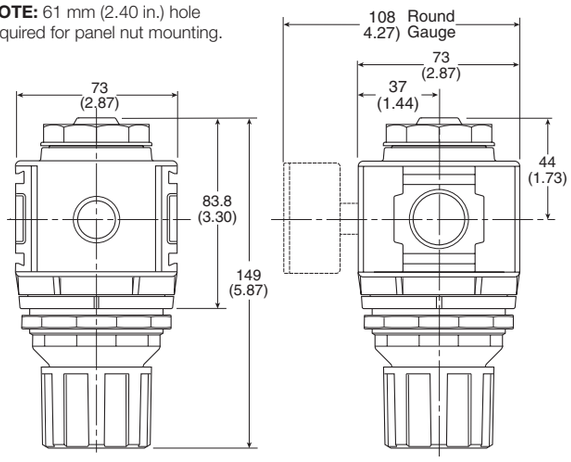

⚠ WARNING

Product rupture can cause serious injury.
Do not connect regulator to bottled gas.
Do not exceed Maximum primary pressure rating.

CAUTION:

REGULATOR PRESSURE ADJUSTMENT – The working range of knob adjustment is designed to permit outlet pressures within their full range. Pressure adjustment beyond this range is also possible because the knob is not a limiting device. This is a common characteristic of most industrial regulators, and limiting devices may be obtained only by special design. For best performance, regulated pressure should always be set by increasing the pressure up to the desired setting.

Flow Charts

1/2 Regulator

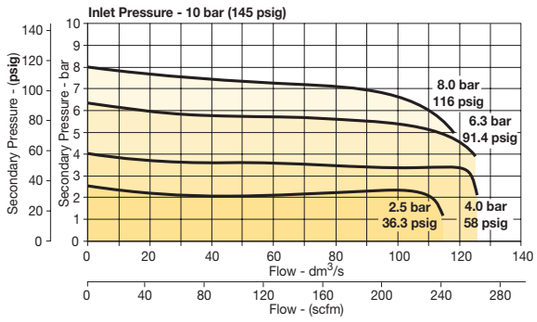

3/4 Regulator

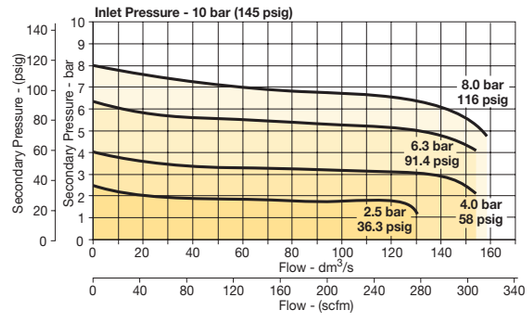

Repair and Service Kits

Panel mount nut - aluminum	**P33KA00MM**
Panel mount nut - plastic	**P33KA00MP**
Angle bracket (attaches via panel nut)	**P33KA00MR**
T-bracket with body connector	**P32KA00MT**
T-bracket	**P32KA00MB**
Body connector	**P32KA00CB**

Gauges

50mm (2") Round 1/4" center back mount	
0-60 psig / 0-4 bar	**P6G-ERB2040**
0-160 psig / 0-11 bar	**P6G-ERB2110**
0-300 psig / 0-20 bar	**P6G-ERB2200**

For best performance, regulated pressure should always be set by increasing the pressure up to the desired setting.

Mini Filter / Regulator - P31

Symbols

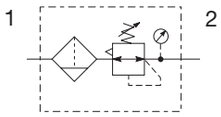

- Integral 1/4" ports (NPT & BSPP)
- High efficiency 5 micron element as standard
- Excellent water removal efficiency
- Robust but lightweight aluminum construction
- Positive bayonet latch to ensure correct & safe fitting
- Secondary pressure ranges 0-2 bar (0-30 psig), 0-4 bar, (0-60 psig), 0-8 bar (0-125 psig), 0-16 bar (0-232 psig)
- Secondary aspiration plus balanced poppet provides quick response and accurate pressure regulation

Options:

P31EB [ ] 2 E [ ] [ ] [ ] N [ ] P

Basic series	
Global modular mini filter / regulator	P31EB

Thread type	
BSPP	**1**
NPT	9

Element	
5µ Element	**E**

Relief	
B	**Relieving**
N	Non-relieving

Mounting	
P	**Plastic panel mount nut**

Port size	
1/4	**2**

Drain type	
B	**Pulse drain**
M	**Manual drain**

Bowl type	
Poly bowl with bowl guard	**G**
Metal bowl without sight gauge	**M**

Adjustment range		
With square gauge		**With round gauge**
psig	**bar**	
1 = 30*	**V = 2***	Z 2 bar; 30 psig; 0.2 MPa
3 = 60	**S = 4**	M 4 bar; 60 psig; 0.4 MPa
5 = 125	**T = 8**	G 8 bar; 125 psig; 0.8 MPa
		J§ 16 bar; 232 psig; 1.6 MPa
		Without gauge
		Y 2 bar; 30 psig; 0.2 MPa
		L 4 bar; 60 psig; 0.4 MPa
		N 8 bar; 125 psig; 0.8 MPa
		H§ 16 bar; 232 psig; 1.6 MPa

* Unit comes with 0-4 bar or 0-60 psig gauge respectively.
§ Not available with poly bowl with bowl guard.
Bar gauges fitted to BSPP
PSI gauges fitted to NPT

Bold items are most common.

Port size	Description	Flow‡ dm^3/s (scfm)	Max. bar (psig)	Height mm (inches)	Width mm (inches)	Depth mm (inches)	Part number†
1/4"	8 bar (125 psig) relieving - poly bowl - manual drain	35 (74)	10 (150)	176.9 (6.96)	40 (1.58)	61.3 (2.41)	**P31EB12EGMBNTP**
1/4"	8 bar (125 psig) relieving - poly bowl - pulse drain	35 (74)	10 (150)	172.0 (6.77)	40 (1.58)	61.3 (2.41)	**P31EB12EGBBNTP**
1/4"	8 bar (125 psig) relieving - metal bowl - manual drain	35 (74)	17 (250)	176.9 (6.96)	40 (1.58)	61.3 (2.41)	**P31EB12EMMBNTP**
1/4"	8 bar (125 psig) relieving - metal bowl - pulse drain	35 (74)	17 (250)	172.0 (6.77)	40 (1.58)	61.3 (2.41)	**P31EB12EMBBNTP**

† **Standard part numbers shown in bold. For other models refer to Options chart above.**
‡ Flow with 10 bar (145 psig) inlet pressure, 6.3 bar (91.3) psig) set pressure and 1 bar (14.5 psig) pressure drop.

Specifications

Flow capacity*	1/4	35 dm^3/s (74 scfm)
Operating temperature†	Plastic bowl Metal bowl	-10°C to 52°C (14°F to 125°F) -10°C to 65.5°C (14°F to 150°F)
Max. supply pressure	Plastic bowl Metal bowl	10 bar (150 psig) 17 bar (250 psig)
Standard filtration		5 micron
Useful retention		12 cm^3 (0.4 US oz.)
Adjusting range pressure		0-2 bar (30 psig) 0-4 bar (60 psig) 0-8 bar (125 psig) 0-16 bar (232 psig)
Port size	BSPP / NPT	1/4
Gauge port (2 ea.)**	BSPP / NPT	1/8
Weight		0.19 kg (0.42 lbs)

* Inlet pressure 10 bar (145 psig). Secondary pressure 6.3 bar (91.3 psig).
** Non-gauge option only.
† Units with square gauges: -15°C to 65.5°C (5°F to 150°F)

Air quality:
Within ISO 8573-1: 1991 Class 3 (Particulates)
Within ISO 8573-1: 2001 Class 6 (Particulates)

⚠ WARNING

Product rupture can cause serious injury.
Do not connect regulator to bottled gas.
Do not exceed Maximum primary pressure rating.

Flow Charts

1/4 Filter / Regulator

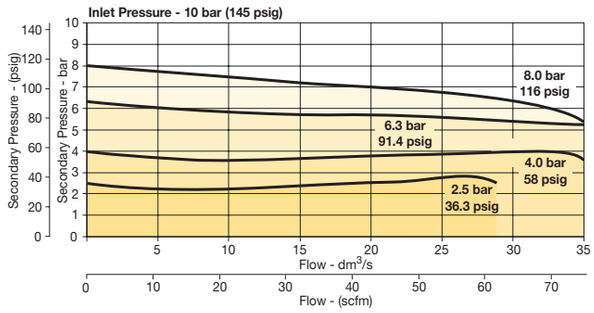

Material Specifications

Body		Aluminum
Adjustment knob		Acetal
Body cap		ABS
Bonnet		PBT
Bowl	Plastic bowl Metal bowl	Polycarbonate Aluminum
Bowl guard		Nylon
Filter element		Polyethylene
Seals		Nitrile
Springs		Steel
Valve assembly		Brass / Nitrile
Diaphragm assembly		Brass / Nitrile
Panel nut		Acetal

Dimensions mm (inches)

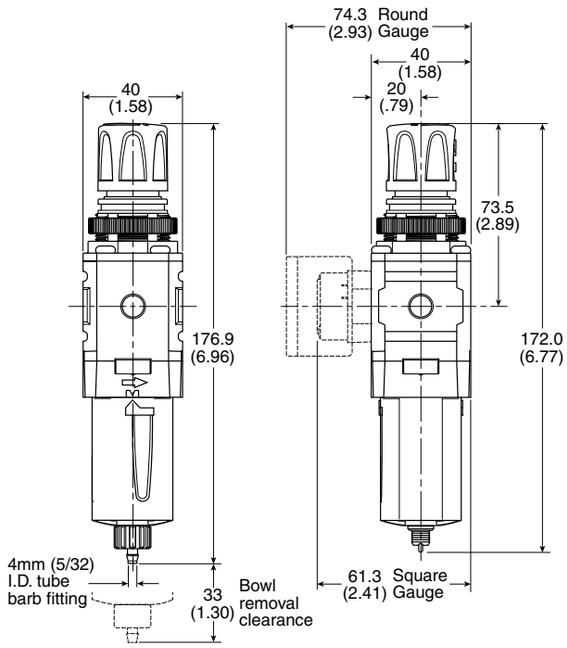

Manual Drain **Pulse Drain**

Repair and Service Kits

Plastic bowl / Bowl guard manual drain	**P31KB00BGM**
Plastic bowl / Bowl guard pulse drain	**P31KB00BGB**
Metal bowl / w/o sight gauge pulse drain	**P31KB00BMB**
5µ particle filter element	**P31KA00ESE**
Panel mount nut - aluminum	**P31KA00MM**
Panel mount nut - plastic	**P31KA00MP**
Angle bracket (attaches via panel nut)	**P31KB00MR**
C-bracket (fits to body)	**P31KA00MW**
T-bracket with body connector	**P31KA00MT**
Body connector	**P31KA00CB**

Gauges

Square flush mount gauge

0-4 bar	**K4511SCR04B**
0-11 bar	**K4511SCR11B**
0-60 psig	**K4511SCR060**
0-160 psig	**K4511SCR160**

For best performance, regulated pressure should always be set by increasing the pressure up to the desired setting.

Square with adapter kit

0-4 bar	**P6G-PR11040**
0-11 bar	**P6G-PR11110**
0-60 psig	**P6G-PR90060**
0-160 psig	**P6G-PR90160**

Compact Filter / Regulator - P32

Symbols

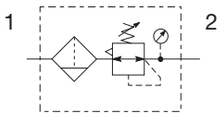

- Integral 1/4", 3/8" or 1/2" ports (NPT & BSPP)
- High efficiency 5 micron element as standard
- Excellent water removal efficiency
- Robust but lightweight aluminum construction
- Positive bayonet latch to ensure correct & safe fitting
- Secondary pressure ranges 0-2 bar (0-30 psig), 0-4 bar, (0-60 psig), 0-8 bar (0-125 psig), 0-17 bar (0-250 psig)
- Secondary aspiration plus balanced poppet provides quick response and accurate pressure regulation

Options:

P32EB [ ] [ ] E [ ] [ ] [ ] N [ ] P

Basic series	
Global modular compact filter / regulator	P32EB

Thread type	
BSPP	1
NPT	9

Element	
5µ Element	E

Relief	
B	Relieving
N	Non-relieving

Mounting	
P	Plastic panel mount nut

Port size	
1/4	2
3/8	3
1/2	4

Drain type	
M	Manual drain
A	Auto drain

Bowl type	
Poly bowl with bowl guard	G
Metal bowl with sight gauge	S

Adjustment range		
With square gauge		With round gauge
psig	bar	
1 = 30*	V = 2*	Z 2 bar; 30 psig; 0.2 MPa
3 = 60	S = 4	M 4 bar; 60 psig; 0.4 MPa
5 = 125	T = 8	G 8 bar; 125 psig; 0.8 MPa
		J§ 17 bar; 250 psig; 1.7 MPa
		Without gauge
		Y 2 bar; 30 psig; 0.2 MPa
		L 4 bar; 60 psig; 0.4 MPa
		N 8 bar; 125 psig; 0.8 MPa
		H§ 17 bar; 250 psig; 1.7 MPa

* Unit comes with 0-4 bar or 0-60 psig gauge respectively.
§ Not available with poly bowl with bowl guard.

Bold items are most common.

Port size	Description	Flow‡ dm^3/s (scfm)	Max. bar (psig)	Height mm (inches)	Width mm (inches)	Depth mm (inches)	Part number†
1/4"	8 bar (125 psig) relieving - poly bowl - manual drain	42 (89)	10 (150)	261.6 (10.3)	60 (2.36)	93 (3.66)	**P32EB12EGMBNGP**
1/4"	8 bar (125 psig) relieving - poly bowl - auto drain	42 (89)	10 (150)	255.6 (10.1)	60 (2.36)	93 (3.66)	**P32EB12EGABNGP**
1/4"	8 bar (125 psig) relieving - metal bowl - manual drain	42 (89)	17 (250)	261.6 (10.3)	60 (2.36)	93 (3.66)	**P32EB12ESMBNGP**
1/4"	8 bar (125 psig) relieving - metal bowl - auto drain	42 (89)	17 (250)	255.6 (10.1)	60 (2.36)	93 (3.66)	**P32EB12ESABNGP**
3/8"	8 bar (125 psig) relieving - poly bowl - manual drain	58 (123)	10 (150)	261.6 (10.3)	60 (2.36)	93 (3.66)	**P32EB13EGMBNGP**
3/8"	8 bar (125 psig) relieving - poly bowl - auto drain	58 (123)	10 (150)	255.6 (10.1)	60 (2.36)	93 (3.66)	**P32EB13EGABNGP**
3/8"	8 bar (125 psig) relieving - metal bowl - manual drain	58 (123)	17 (250)	261.6 (10.3)	60 (2.36)	93 (3.66)	**P32EB13ESMBNGP**
3/8"	8 bar (125 psig) relieving - metal bowl - auto drain	58 (123)	17 (250)	255.6 (10.1)	60 (2.36)	93 (3.66)	**P32EB13ESABNGP**
1/2"	8 bar (125 psig) relieving - poly bowl - manual drain	64 (136)	10 (150)	261.6 (10.3)	60 (2.36)	93 (3.66)	**P32EB14EGMBNGP**
1/2"	8 bar (125 psig) relieving - poly bowl - auto drain	64 (136)	10 (150)	255.6 (10.1)	60 (2.36)	93 (3.66)	**P32EB14EGABNGP**
1/2"	8 bar (125 psig) relieving - metal bowl - manual drain	64 (136)	17 (250)	261.6 (10.3)	60 (2.36)	93 (3.66)	**P32EB14ESMBNGP**
1/2"	8 bar (125 psig) relieving - metal bowl - auto drain	64 (136)	17 (250)	255.6 (10.1)	60 (2.36)	93 (3.66)	**P32EB14ESABNGP**

† **Standard part numbers shown in bold. For other models refer to Options chart above.**
‡ Flow with 10 bar (145 psig) inlet pressure, 6.3 bar (91.3) psig) set pressure and 1 bar (14.5 psig) pressure drop.

Specifications

Flow capacity*	1/4	42 dm^3/s (89 scfm)
	3/8	58 dm^3/s (123 scfm)
	1/2	64 dm^3/s (136 scfm)
Operating temperature	Plastic bowl	-25°C to 52°C (-13°F to 125°F)
	Metal bowl	-25°C to 65.5°C (-13°F to 150°F)
Max. supply pressure	Plastic bowl	10 bar (150 psig)
	Metal bowl	17 bar (250 psig)
Standard filtration		5 micron
Useful retention†		51 cm^3 (1.7 US oz.)
Adjusting range pressure		0-2 bar (30 psig)
		0-4 bar (60 psig)
		0-8 bar (125 psig)
		0-17 bar (250 psig)
Port size	BSPP / NPT	1/4, 3/8, 1/2
Gauge port (2 ea.)	BSPP / NPT	1/4
Weight		0.53 kg (1.17 lbs)

* Inlet pressure 10 bar (145 psig). Secondary pressure 6.3 bar (91.3 psig).
† Useful retention refers to volume below the quiet zone baffle.

Air quality:
Within ISO 8573-1: 1991 Class 3 (Particulates); 2001 Class 6 (Particulates)

Material Specifications

Body		Aluminum
Adjustment knob		Acetal
Element retainer / Baffle		Acetal
Bowl	Plastic bowl	Polycarbonate
	Metal bowl	Zinc
Bowl guard		Nylon
Filter element		Sintered polyethylene
Seals		Nitrile
Springs	Main regulating / valve	Steel / S.S.
Valve assembly		Brass / Nitrile
Diaphragm assembly		Nitrile / Zinc
Panel nut		Acetal
Sight gauge	Metal bowl	Polycarbonate

Dimensions mm (inches)

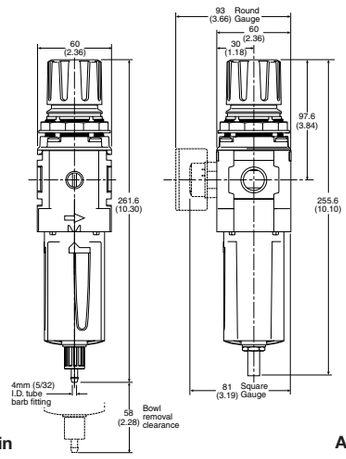

Manual Drain **Automatic Drain**

⚠ WARNING

Product rupture can cause serious injury.
Do not connect regulator to bottled gas.
Do not exceed Maximum primary pressure rating.

Flow Charts

1/4 Filter / Regulator

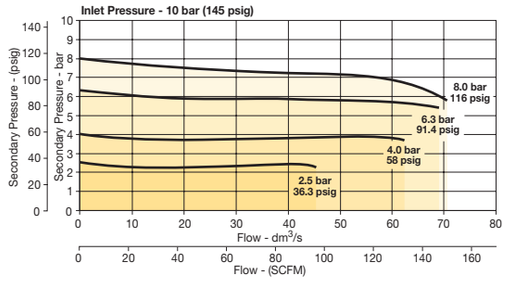

3/8 Filter/Regulator

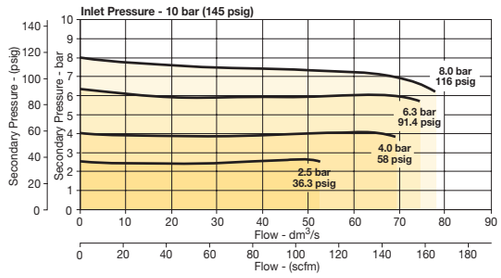

1/2 Filter/Regulator

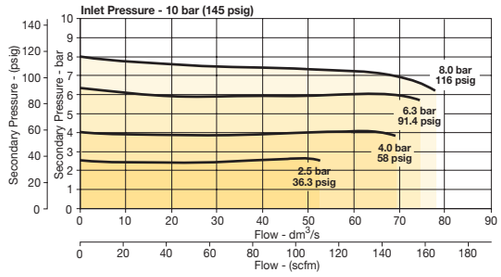

Repair and Service Kits

Plastic bowl / Bowl guard manual drain	**P32KB00BGM**
Metal bowl / Sight gauge manual drain	**P32KB00BSM**
Auto drain	**P32KA00DA**
5µ particle filter element	**P32KA00ESE**
Panel mount nut - aluminum	**P32KA00MM**
Panel mount nut - plastic	**P32KA00MP**
Angle bracket (fits to panel mount threads)	**P32KB00MR**
T-bracket (fits to body connector)	**P32KA00MB**
T-bracket with body connector	**P32KA00MT**
Body connector	**P32KA00CB**

Gauges

50mm (2") Round 1/4" center back mount	
0-60 psig / 0-4 bar	**P6G-ERB2040**
0-160 psig / 0-11 bar	**P6G-ERB2110**
0-300 psig / 0-20 bar	**P6G-ERB2200**

For best performance, regulated pressure should always be set by increasing the pressure up to the desired setting.

Compact Semi-Precision Filter / Regulator - P32

Symbols

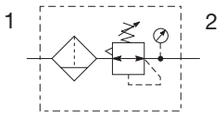

- Integral 1/4", 3/8" or 1/2" ports (NPT & BSPP)
- High efficiency 5 micron element as standard
- Excellent water removal efficiency
- Robust but lightweight aluminum construction
- Positive bayonet latch to ensure correct & safe fitting
- Secondary pressure ranges 0-2 bar (0-30 psig), 0-4 bar, (0-60 psig), 0-8 bar (0-125 psig), 0-17 bar (0-250 psig)
- Secondary aspiration plus balanced poppet provides quick response and accurate pressure regulation

Options:

P32EB [ ] [ ] **E** [ ] [ ] [ ] **N** [ ] **P**

Basic series

Global modular compact filter / regulator	P32EB

Thread type

BSPP	**1**
NPT	9

Element

5µ Element	**E**

Relief

P	**Relieving**
E	Non-relieving

Mounting

P	**Plastic panel mount nut**

Port size

1/4	**2**
3/8	**3**
1/2	**4**

Drain type

M	**Manual drain**
A	**Auto drain**

Bowl type

Poly bowl with bowl guard	**G**
Metal bowl with sight gauge	**S**

Adjustment range

	With round gauge
Z	**2 bar; 30 psig; 0.2 MPa**
M	**4 bar; 60 psig; 0.4 MPa**
G	**8 bar; 125 psig; 0.8 MPa**
J§	**17 bar; 250 psig; 1.7 MPa**
	Without gauge
Y	**2 bar; 30 psig; 0.2 MPa**
L	**4 bar; 60 psig; 0.4 MPa**
N	**8 bar; 125 psig; 0.8 MPa**
H§	**17 bar; 250 psig; 1.7 MPa**

§ Not available with poly bowl with bowl guard.

Bold items are most common.

Port size	Description	Flow‡ dm^3/s (scfm)	Max. bar (psig)	Height mm (inches)	Width mm (inches)	Depth mm (inches)	Part number†
1/4"	8 bar (125 psig) relieving - poly bowl - manual drain	35 (75)	10 (150)	261.6 (10.3)	60 (2.36)	93 (3.66)	**P32EB12EGMPNGP**
1/4"	8 bar (125 psig) relieving - poly bowl - auto drain	35 (75)	10 (150)	255.6 (10.1)	60 (2.36)	93 (3.66)	**P32EB12EGAPNGP**
1/4"	8 bar (125 psig) relieving - metal bowl - manual drain	35 (75)	17 (250)	261.6 (10.3)	60 (2.36)	93 (3.66)	**P32EB12ESMPNGP**
1/4"	8 bar (125 psig) relieving - metal bowl - auto drain	35 (75)	17 (250)	255.6 (10.1)	60 (2.36)	93 (3.66)	**P32EB12ESAPNGP**
3/8"	8 bar (125 psig) relieving - poly bowl - manual drain	35 (75)	10 (150)	261.6 (10.3)	60 (2.36)	93 (3.66)	**P32EB13EGMPNGP**
3/8"	8 bar (125 psig) relieving - poly bowl - auto drain	35 (75)	10 (150)	255.6 (10.1)	60 (2.36)	93 (3.66)	**P32EB13EGAPNGP**
3/8"	8 bar (125 psig) relieving - metal bowl - manual drain	35 (75)	17 (250)	261.6 (10.3)	60 (2.36)	93 (3.66)	**P32EB13ESMPNGP**
3/8"	8 bar (125 psig) relieving - metal bowl - auto drain	35 (75)	17 (250)	255.6 (10.1)	60 (2.36)	93 (3.66)	**P32EB13ESAPNGP**
1/2"	8 bar (125 psig) relieving - poly bowl - manual drain	35 (75)	10 (150)	261.6 (10.3)	60 (2.36)	93 (3.66)	**P32EB14EGMPNGP**
1/2"	8 bar (125 psig) relieving - poly bowl - auto drain	35 (75)	10 (150)	255.6 (10.1)	60 (2.36)	93 (3.66)	**P32EB14EGAPNGP**
1/2"	8 bar (125 psig) relieving - metal bowl - manual drain	35 (75)	17 (250)	261.6 (10.3)	60 (2.36)	93 (3.66)	**P32EB14ESMPNGP**
1/2"	8 bar (125 psig) relieving - metal bowl - auto drain	35 (75)	17 (250)	255.6 (10.1)	60 (2.36)	93 (3.66)	**P32EB14ESAPNGP**

† **Standard part numbers shown in bold. For other models refer to Options chart above.**
‡ Flow with 10 bar (145 psig) inlet pressure, 6.3 bar (91.3) psig) set pressure and 1 bar (14.5 psig) pressure drop.

Specifications

Flow capacity*	1/4	35 dm^3/s (75 scfm)
	3/8	35 dm^3/s (75 scfm)
	1/2	35 dm^3/s (75 scfm)
Effect of supply pressure variation		0.04 bar (0.6 PSIG) for 1.7 bar (25 PSIG) change in P1
Operating temperature	Plastic bowl	-25°C to 52°C (-13°F to 125°F)
	Metal bowl	-25°C to 65.5°C (-13°F to 150°F)
Max. supply pressure	Plastic bowl	10 bar (150 psig)
	Metal bowl	17 bar (250 psig)
Standard filtration		5 micron
Useful retention†		51 cm^3 (1.7 US oz.)
Adjusting range pressure		0-2 bar (30 psig) 0-4 bar (60 psig) 0-8 bar (125 psig) 0-17 bar (250 psig)
Port size	BSPP / NPT	1/4, 3/8, 1/2
Gauge port (2 ea.)	BSPP / NPT	1/4
Weight		0.53 kg (1.17 lbs)

* Inlet pressure 10 bar (145 psig). Secondary pressure 6.3 bar (91.3 psig).
† Useful retention refers to volume below the quiet zone baffle.

Air quality:
Within ISO 8573-1: 1991 Class 3 (Particulates); 2001 Class 6 (Particulates)

Material Specifications

Body		Aluminum
Adjustment knob		Acetal
Element retainer / Baffle		Acetal
Bowl	Plastic bowl	Polycarbonate
	Metal bowl	Zinc
Bowl guard		Nylon
Filter element		Sintered polyethylene
Seals		Nitrile
Springs	Main regulating / valve	Steel / S.S.
Valve assembly		Brass / Nitrile
Diaphragm assembly		Nitrile / Zinc
Panel nut		Acetal
Sight gauge	Metal bowl	Polycarbonate

Dimensions mm (inches)

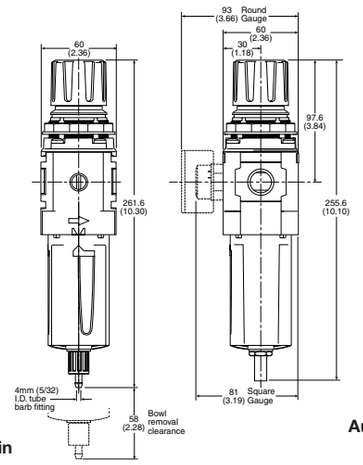

Manual Drain **Automatic Drain**

⚠ WARNING

Product rupture can cause serious injury.
Do not connect regulator to bottled gas.
Do not exceed Maximum primary pressure rating.

Flow Charts

1/4 Filter / Regulator

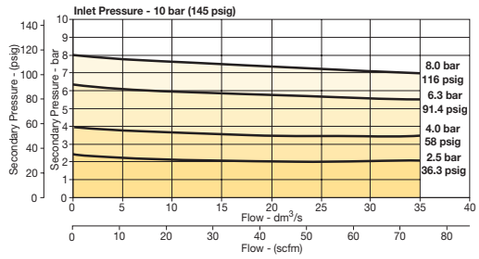

3/8 Filter/Regulator

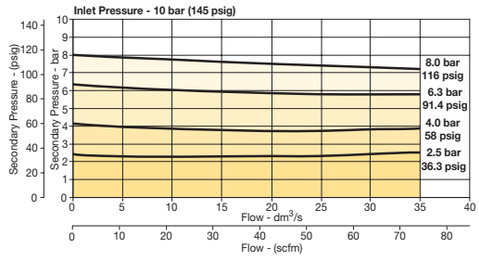

1/2 Filter/Regulator

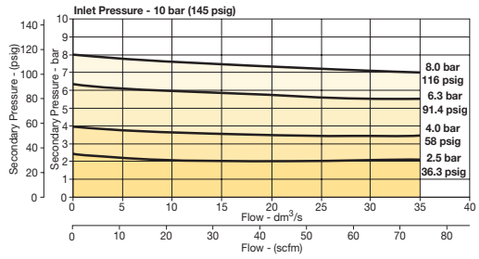

Repair and Service Kits

Plastic bowl / Bowl guard manual drain	**P32KB00BGM**
Metal bowl / Sight gauge manual drain	**P32KB00BSM**
Auto drain	**P32KA00DA**
5µ particle filter element	**P32KA00ESE**
Panel mount nut - aluminum	**P32KA00MM**
Panel mount nut - plastic	**P32KA00MP**
Angle bracket (fits to panel mount threads)	**P32KB00MR**
T-bracket (fits to body connector)	**P32KA00MB**
T-bracket with body connector	**P32KA00MT**
Body connector	**P32KA00CB**

Gauges

50mm (2") Round 1/4" center back mount

0-60 psig / 0-4 bar	**P6G-ERB2040**
0-160 psig / 0-11 bar	**P6G-ERB2110**
0-300 psig / 0-20 bar	**P6G-ERB2200**

For best performance, regulated pressure should always be set by increasing the pressure up to the desired setting.

Standard Filter / Regulator - P33

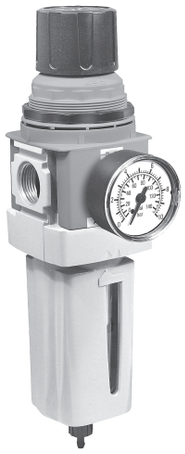

Symbols

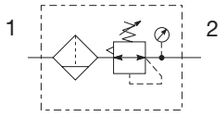

- Integral 1/2" or 3/4" ports (NPT & BSPP)
- High efficiency 5 micron element as standard
- Excellent water removal efficiency
- Robust but lightweight aluminum construction
- Positive bayonet latch to ensure correct & safe fitting
- Secondary pressure ranges 0-2 bar (0-30 psig), 0-4 bar, (0-60 psig), 0-8 bar (0-125 psig), 0-17 bar (0-250 psig)
- Secondary aspiration plus balanced poppet provides quick response and accurate pressure regulation

Options:

P33EA [ ] [ ] E [ ] [ ] [ ] N [ ] P

Basic series

Global modular standard filter / regulator	P33EA

Thread type

BSPP	**1**
NPT	9

Port size

1/2	**4**
3/4	**6**

Element

5µ Element	**E**

Bowl type

Poly bowl with bowl guard	**G**
Metal bowl with sight gauge	**S**

Drain type

M	**Manual drain**
A	**Auto drain**

Relief

B	**Relieving**
N	Non-relieving

Adjustment range

	With round gauge
Z	**2 bar; 30 psig; 0.2 MPa**
M	**4 bar; 60 psig; 0.4 MPa**
G	**8 bar; 125 psig; 0.8 MPa**
J§	**17 bar; 250 psig; 1.7 MPa**
	Without gauge
Y	**2 bar; 30 psig; 0.2 MPa**
L	**4 bar; 60 psig; 0.4 MPa**
N	**8 bar; 125 psig; 0.8 MPa**
H§	**17 bar; 250 psig; 1.7 MPa**

§ Not available with poly bowl with bowl guard.

Mounting

P	**Plastic panel mount nut**

Bold items are most common.

Port size	Description	Flow‡ dm^3/s (scfm)	Max. bar (psig)	Height mm (inches)	Width mm (inches)	Depth mm (inches)	Part number†
1/2"	8 bar (125 psig) relieving - poly bowl - manual drain	99 (210)	10 (150)	291 (11.44)	73 (2.87)	108 (4.27)	**P33EA14EGMBNGP**
1/2"	8 bar (125 psig) relieving - poly bowl - auto drain	99 (210)	10 (150)	285 (11.22)	73 (2.87)	108 (4.27)	**P33EA14EGABNGP**
1/2"	8 bar (125 psig) relieving - metal bowl - manual drain	99 (210)	17 (250)	291 (11.44)	73 (2.87)	108 (4.27)	**P33EA14ESMBNGP**
1/2"	8 bar (125 psig) relieving - metal bowl - auto drain	99 (210)	17 (250)	285 (11.22)	73 (2.87)	108 (4.27)	**P33EA14ESABNGP**
3/4"	8 bar (125 psig) relieving - poly bowl - manual drain	108 (230)	10 (150)	291 (11.44)	73 (2.87)	108 (4.27)	**P33EA16EGMBNGP**
3/4"	8 bar (125 psig) relieving - poly bowl - auto drain	108 (230)	10 (150)	285 (11.22)	73 (2.87)	108 (4.27)	**P33EA16EGABNGP**
3/4"	8 bar (125 psig) relieving - metal bowl - manual drain	108 (230)	17 (250)	291 (11.44)	73 (2.87)	108 (4.27)	**P33EA16ESMBNGP**
3/4"	8 bar (125 psig) Relieving - Metal bowl - Auto drain	108 (230)	17 (250)	285 (11.22)	73 (2.87)	108 (4.27)	**P33EA16ESABNGP**

† **Standard part numbers shown in bold. For other models refer to Options chart above.**
‡ Flow with 10 bar (145 psig) inlet pressure, 6.3 bar (91.3) psig) set pressure and 1 bar (14.5 psig) pressure drop.

Specifications

Flow capacity*	1/2	99 dm³/s (210 scfm)
	3/4	108 dm³/s (230 scfm)
Operating temperature	Plastic bowl	-25°C to 52°C (-13°F to 125°F)
	Metal bowl	-25°C to 65.5°C (-13°F to 150°F)
Supply pressure	Plastic bowl	10 bar (150 psig)
	Metal bowl	17 bar (250 psig)
Standard filtration		5 micron
Useful retention†		85 cm³ (2.8 US oz.)
Adjusting range pressure		0-2 bar (30 psig)
		0-4 bar (60 psig)
		0-8 bar (125 psig)
		0-17 bar (250 psig)
Port size	BSPP / NPT	1/2, 3/4
Gauge port (2 ea.)	BSPP / NPT	1/4
Weight		0.85 kg (1.87 lbs)

* Inlet pressure 10 bar (145 psig). Secondary pressure 6.3 bar (91.3 psig).
† Useful retention refers to volume below the quiet zone baffle.

Air quality:
Within ISO 8573-1: 1991 Class 3 (Particulates); 2001 Class 6 (Particulates)

Material Specifications

Body		Aluminum
Adjustment knob		Acetal
Body cap		ABS
Element retainer / Baffle		Acetal
Bowls	Plastic bowl	Polycarbonate
	Metal bowl	Aluminum
Filter element		Sintered Polyethylene
Seals		Nitrile
Springs	Main regulating / Valve	Steel / S.S.
Valve assembly		Brass / Nitrile
Diaphragm assembly		Nitrile / Zinc
Panel nut		Acetal
Sight gauge	Metal bowl	Polycarbonate

Dimensions mm (inches)

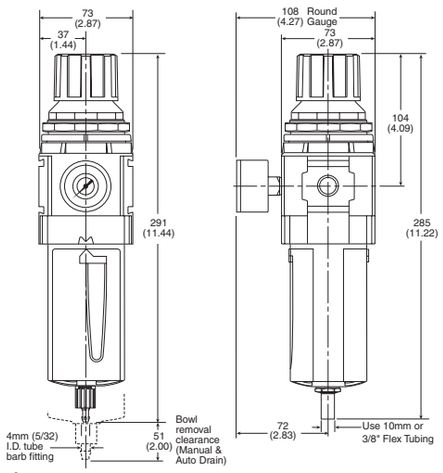

Manual Drain **Automatic Drain**

⚠ WARNING

Product rupture can cause serious injury.
Do not connect regulator to bottled gas.
Do not exceed Maximum primary pressure rating.

Flow Charts

1/2 Filter / Regulator

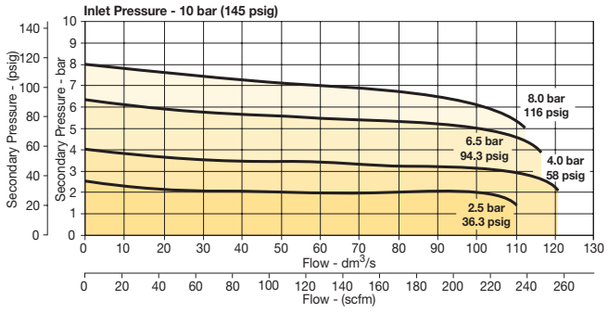

3/4 Filter/Regulator

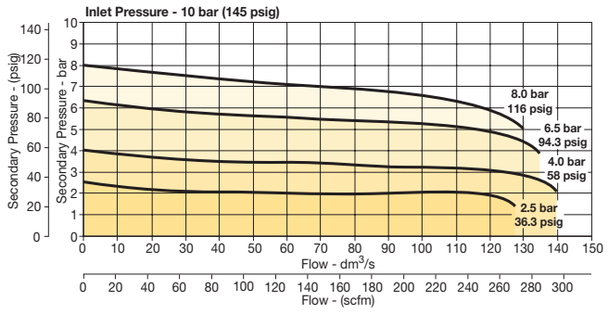

Repair and Service Kits

Plastic bowl / Bowl guard manual drain	**P33KA00BGM**
Metal bowl / Sight gauge manual drain	**P33KA00BSM**
Auto drain	**P32KA00DA**
5µ particle filter element	**P33KA00ESE**
Panel mount nut - Aluminum	**P33KA00MM**
Panel mount nut - Plastic	**P33KA00MP**
Angle bracket (fits to panel mount threads)	**P33KA00MR**
T-bracket (fits to body connector)	**P32KA00MB**
T-bracket with body connector	**P32KA00MT**
Body connector	**P32KA00CB**

Gauges

50mm (2") Round 1/4" center back mount	
0-60 psig / 0-4 bar	**P6G-ERB2040**
0-160 psig / 0-11 bar	**P6G-ERB2110**
0-300 psig / 0-20 bar	**P6G-ERB2200**

For best performance, regulated pressure should always be set by increasing the pressure up to the desired setting.

Mini Lubricator - P31

Symbol

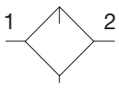

Lubricator
with drain

- Integral 1/4" ports (NPT & BSPP)
- Robust but lightweight aluminum construction
- Proportional oil delivery over a wide range of air flows
- Finger tip ratchet control for precise oil drip rate adjustment

Options:

P31LB [ ] 2 L [ ] N N

Basic series	
Global modular mini lubricator	P31LB

Thread type	
BSPP	**1**
NPT	9

Port size	
1/4	**2**

Lube type	
Oil mist standard sight dome	**L**

Bowl type	
G	**Poly bowl with bowl guard**
M	Metal bowl without sight gauge

Drain type	
N	**No drain closed end**

Mounting	
N	**No bracket**

Bold items are most common.

Port size	Description	Flow‡ dm^3/s (scfm)	Max. bar (psig)	Height mm (inches)	Width mm (inches)	Depth mm (inches)	Part number†
1/4"	Poly bowl - No drain	19 (40)	10 (150)	153.3 (6.04)	40 (1.58)	40 (1.58)	**P31LB12LGNN**
1/4"	Metal bowl - No drain	19 (40)	17 (250)	153.3 (6.04)	40 (1.58)	40 (1.58)	**P31LB12LMNN**

† **Standard part numbers shown in bold. For other models refer to Options chart above.**
‡ Flow with 6.3 bar (91.3 psig) inlet pressure and 0.34 bar (4.9 psig) pressure drop.

Specifications

Flow capacity*	1/4	19 dm³/s (40 scfm)
Operating temperature	Plastic bowl Metal bowl	-10°C to 52°C (14°F to 125°F) -10°C to 65.5°C (14°F to 150°F)
Max. supply pressure	Plastic bowl Metal bowl	10 bar (150 psig) 17 bar (250 psig)
Useful retention		18 cm³ (0.6 US oz.)
Port size	BSPP / NPT	1/4
Weight		0.13 kg (0.29 lbs)

* Inlet pressure 6.3 bar (91.3 psig). Pressure drop 0.34 bar (4.9 psig).

Flow Charts

P31LB 1/4" Lubricator

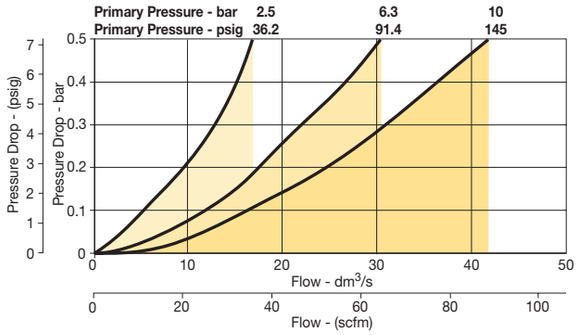

Material Specifications

Body		Aluminum
Body cap		ABS
Bowl	Plastic bowl Metal bowl	Polycarbonate Aluminum
Seals		Nitrile
Sight dome		Polycarbonate
Suggested lubricant		ISO / ASTM VG32
Pick-up filter		Sintered bronze

Dimensions mm (inches)

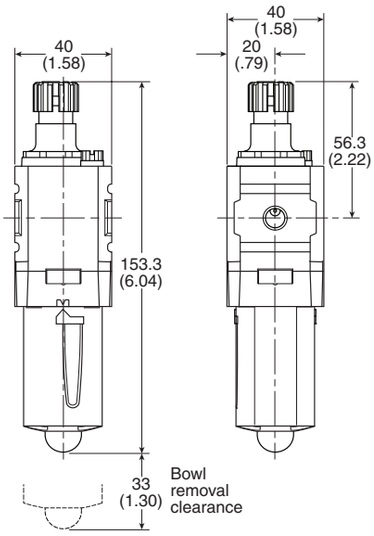

Repair and Service Kits

Plastic bowl / Bowl guard no drain	**P31KB00BGN**
Metal bowl / w/o sight gauge no drain	**P31KB00BMN**
Drip control assembly	**P32KA00PG**
Fill plug	**P31KA00PL**
C-bracket (fits to body)	**P31KA00MW**
T-bracket with body connector	**P31KA00MT**
Body connector	**P31KA00CB**
Lubricator oil - VG15: ISO 3448 - 100 ml	**P3XKA00PPA**
Lubricator oil - VG32 - 1 litre	**P3YKA00PPBB**

(DO NOT USE OILS WITH ADDITIVES, COMPOUNDED OILS CONTAINING SOLVENTS, GRAPHITE, DETERGENTS, OR SYNTHETIC OILS.)

Compact Lubricator - P32

Symbol

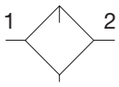

Lubricator
with drain

- Integral 1/4", 3/8" or 1/2" ports (NPT & BSPP)
- Robust but lightweight aluminum construction
- Proportional oil delivery over a wide range of air flows
- Finger tip ratchet control for precise oil drip rate adjustment
- Fill from top under system pressure

Options:

P32LB [ ] [ ] **L** [ ] **N** **N**

Basic series

Global modular compact lubricator	P32LB

Thread type

BSPP	**1**
NPT	9

Port size

1/4	**2**
3/8	**3**
1/2	**4**

Lube type

Oil mist standard sight dome	**L**

Bowl type

G	**Poly bowl with bowl guard**
S	**Metal bowl with sight gauge**

Drain type

N	**No drain closed end**

Mounting

N	**No bracket**

Bold items are most common.

Port size	Description	Flow‡ dm^3/s (scfm)	Max. bar (psig)	Height mm (inches)	Width mm (inches)	Depth mm (inches)	Part number†
1/4"	Poly bowl - No drain	17 (35)	10 (150)	217.3 (8.56)	60 (2.36)	60 (2.36)	**P32LB12LGNN**
1/4"	Metal bowl - No drain	17 (35)	17 (250)	217.3 (8.56)	60 (2.36)	60 (2.36)	**P32LB12LSNN**
3/8"	Poly bowl - No drain	33 (70)	10 (150)	217.3 (8.56)	60 (2.36)	60 (2.36)	**P32LB13LGNN**
3/8"	Metal bowl - No drain	33 (70)	17 (250)	217.3 (8.56)	60 (2.36)	60 (2.36)	**P32LB13LSNN**
1/2"	Poly bowl - No drain	42 (90)	10 (150)	217.3 (8.56)	60 (2.36)	60 (2.36)	**P32LB14LGNN**
1/2"	Metal bowl - No drain	42 (90)	17 (250)	217.3 (8.56)	60 (2.36)	60 (2.36)	**P32LB14LSNN**

† **Standard part numbers shown in bold. For other models refer to Options chart above.**
‡ Flow with 6.3 bar (91.3 psig) inlet pressure and 0.34 bar (4.9 psig) pressure drop.

Specifications

Flow capacity*	1/4	17 dm³/s (38 scfm)
	3/8	33 dm³/s (70 scfm)
	1/2	42 dm³/s (90 scfm)
Operating temperature	Plastic bowl	-10°C to 52°C (14°F to 125°F)
	Metal bowl	-10°C to 65.5°C (14°F to 150°F)
Max. supply pressure	Plastic bowl	10 bar (150 psig)
	Metal bowl	17 bar (250 psig)
Useful retention		121 cm³ (4.09 US oz.)
Port size	BSPP / NPT	1/4, 3/8, 1/2
Weight		0.31 kg (0.68 lbs)

* Inlet pressure 6.3 bar (91.3 psig). Pressure drop 0.34 bar (4.9 psig).

Material Specifications

Body		Aluminum
Body cap		ABS
Bowls	Plastic bowl	Polycarbonate
	Metal bowl	Aluminum
Seals		Nitrile
Sight dome		Polycarbonate
Sight gauge	Metal bowl	Polycarbonate
Suggested lubricant		ISO / ASTM VG32
Pick-up filter		Sintered bronze

Dimensions mm (inches)

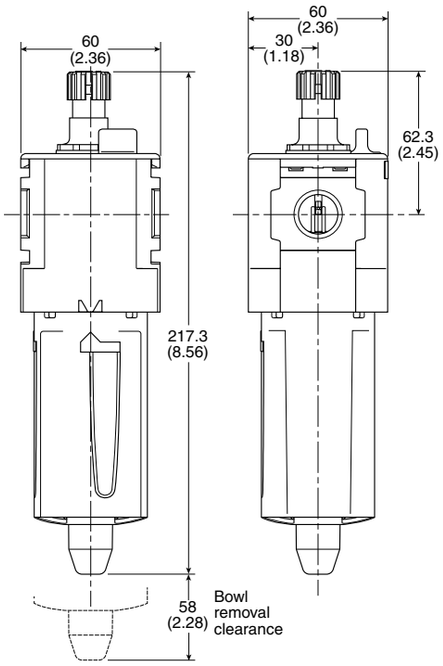

Flow Charts

1/4 Lubricator

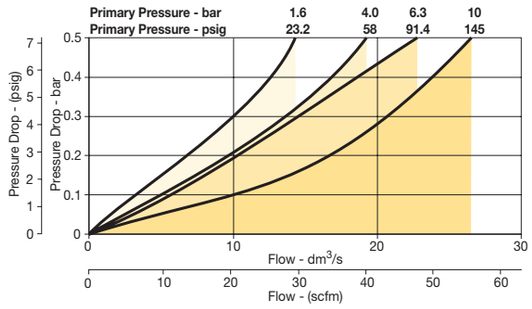

3/8 Lubricator

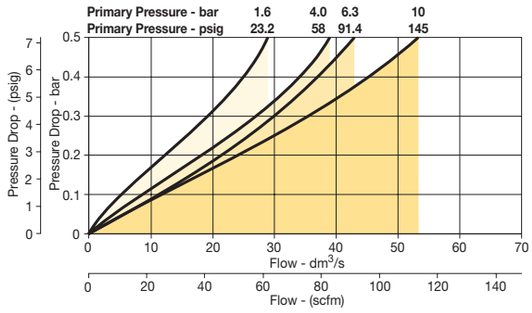

1/2 Lubricator

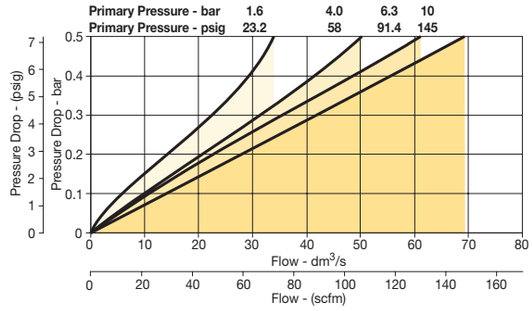

Repair and Service Kits

Plastic bowl / Bowl guard no drain	**P32KB00BGN**
Metal bowl / w/o sight gauge no drain	**P32KB00BMN**
Metal bowl / Sight gauge no drain	**P32KB00BSN**
Drip control assembly	**P32KA00PG**
Fill plug	**P32KA00PL**
L-bracket (fits to body)	**P32KA00ML**
T-bracket (fits to body connector)	**P32KA00MB**
T-bracket with body connector	**P32KA00MT**
Body connector	**P32KA00CB**

(DO NOT USE OILS WITH ADDITIVES, COMPOUNDED OILS CONTAINING SOLVENTS, GRAPHITE, DETERGENTS, OR SYNTHETIC OILS.)

Standard Lubricator - P33

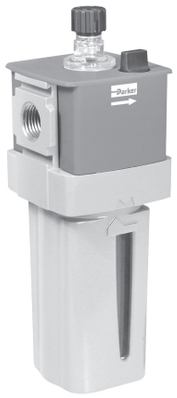

Symbol

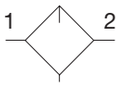

Lubricator
with drain

- Integral 1/2" or 3/4" ports (NPT & BSPP)
- Robust but lightweight aluminum construction
- Proportional oil delivery over a wide range of air flows
- Finger tip ratchet control for precise oil drip rate adjustment
- Fill from top under system pressure

Options:

P33LA [ ] [ ] **L** [ ] **N** **N**

Basic series	
Global modular standard lubricator	P33LA

Thread type	
BSPP	**1**
NPT	9

Port size	
1/2	**4**
3/4	**6**

Lube type	
Oil mist standard sight dome	L

Bowl type	
G	**Poly bowl with bowl guard**
S	**Metal bowl with sight gauge**

Drain type	
N	**No drain closed end**

Mounting	
N	**No bracket**

Bold items are most common.

Port size	Description	Flow‡ dm^3/s (scfm)	Max. bar (psig)	Height mm (inches)	Width mm (inches)	Depth mm (inches)	Part number†
1/2"	Poly bowl - No drain	52 (110)	10 (150)	234 (9.21)	73 (2.9)	73 (2.9)	**P33LA14LGNN**
1/2"	Metal bowl - No drain	52 (110)	17 (250)	234 (9.21)	73 (2.9)	73 (2.9)	**P33LA14LSNN**
3/4"	Poly bowl - No drain	71 (150)	10 (150)	234 (9.21)	73 (2.9)	73 (2.9)	**P33LA16LGNN**
3/4"	Metal bowl - No drain	71 (150)	17 (250)	234 (9.21)	73 (2.9)	73 (2.9)	**P33LA16LSNN**

† **Standard part numbers shown in bold. For other models refer to Options chart above.**
‡ Flow with 6.3 bar (91.3 psig) inlet pressure and 0.34 bar (4.9 psig) pressure drop.

Specifications

Flow capacity*	1/2	52 dm^3/s (110 scfm)
	3/4	71 dm^3/s (150 scfm)
Operating temperature	Plastic bowl	-10°C to 52°C (14°F to 125°F)
	Metal Bowl	-10°C to 65.5°C (14°F to 150°F)
Max. supply pressure	Plastic bowl	10 bar (150 psig)
	Metal bowl	17 bar (250 psig)
Useful retention		181 cm^3 (6.1 US oz.)
Port size	BSPP / NPT	1/2, 3/4
Weight		0.47 kg (1.04 lbs)

* Inlet pressure 6.3 bar (91.3 psig). Pressure drop 0.34 bar (4.9 psig).

Flow Charts

1/2 Lubricator

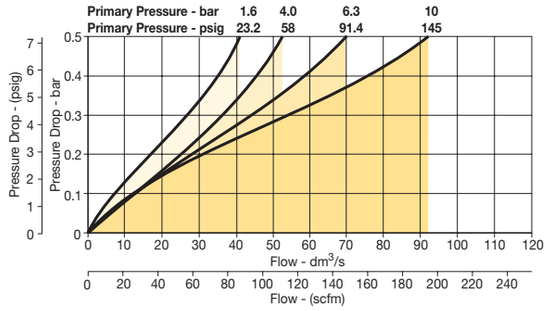

3/4 Lubricator

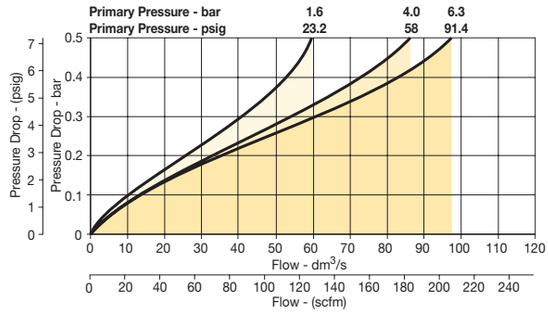

Material Specifications

Body		Aluminum
Body cap		ABS
Bowls	Plastic bowl	Polycarbonate
	Metal bowl	Aluminum
Seals		Nitrile
Sight dome		Polycarbonate
Sight gauge	Metal bowl	Polycarbonate
Suggested lubricant		ISO / ASTM VG32
Pick-up filter		Sintered bronze

Dimensions mm (inches)

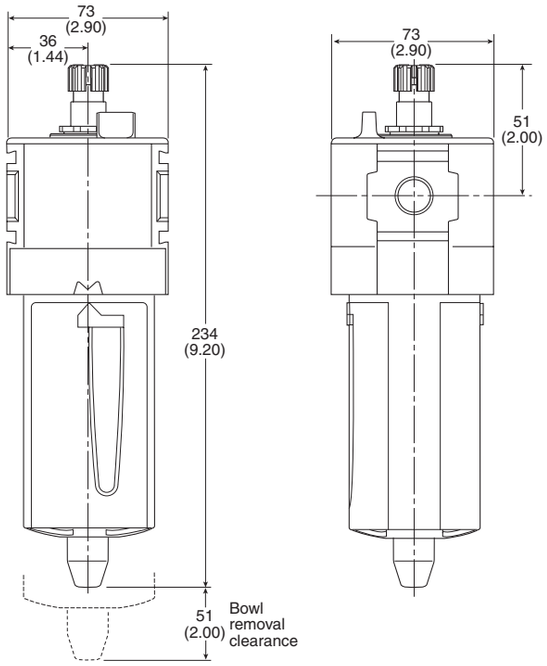

Repair and Service Kits

Plastic bowl / Bowl guard no drain	**P33KA00BGN**
Metal bowl / w/o sight gauge no drain	**P33KA00BMN**
Metal bowl / Sight gauge no drain	**P33KA00BSN**
Drip control assembly	**P32KA00PG**
Fill plug	**P32KA00PL**
L-bracket (fits to body)	**P33KA00ML**
T-bracket (fits to body connector)	**P32KA00MB**
T-bracket with body connector	**P32KA00MT**
Body connector	**P32KA00CB**
Lubricator oil - VG15: ISO 3448 - 100 ml	**P3XKA00PPA**
Lubricator oil - VG32 - 1 litre	**P3YKA00PPBB**

(DO NOT USE OILS WITH ADDITIVES, COMPOUNDED OILS CONTAINING SOLVENTS, GRAPHITE, DETERGENTS, OR SYNTHETIC OILS.)

Proportional Regulators - P31P & P32P

P31P Series
Bottom exhaust

P32P Series
Bottom exhaust

- Very fast response times
- Accurate output pressure
- Micro parameter settings
- Selectable I/O parameters
- Quick, full flow exhaust
- LED display indicates output pressure
- No air consumption in steady state
- Multiple mounting options
- Protection to IP65
- P31P flows to 19 dm3/s (40 scfm)
- P32P flows to 57 dm3/s (120 scfm)

Options:

P31PA [ ] [ ] [ ] [ ] **2** [ ] [ ] **1** **A**

Body size	
Global modular mini (1/4")	P31PA
Global modular compact (1/2")	P32PA

Thread type	
BSPP	1
NPT	9

Port size	
Global modular mini (1/4")	2
Global modular compact (1/2")	4

Version	
Bottom ported exhaust (NC)	A
Bottom ported forced exhaust (NO)†	E
Side ported exhaust (NC)	B
Side ported forced exhaust (NO)†	C

† When the supply voltage is lost the unit will automatically exhaust the regulated pressure to 0 bar (atmospheric pressure)

Pressure range	
Z	0 - 2 bar (0-29 PSIG)
S	0 - 7 bar (0-101 PSIG)
D	0 - 10 bar (0-145 PSIG)

Power supply	
2	24 volts

Control signal	
V	0-10V‡
A	4 - 20mA

Output signal	
D	Digital, PNP
P	PNP or 0-10V
N	NPN or 0-10V
M	4-20mA fixed

D) Digital PNP output only, no analog output selectable
P) Digital PNP and analogue 0-10V outputs selectable, by means of parameter 6. (Factory default 0-10V)
N) Digital NPN and analog 0-10 V outputs selectable by means of parameter 6. Factory default 0-10V)
M) Analog 4-20mA output only.
Note: On all analog outputs the F.S. value can be adjusted by means of parameter 8.

Input connector	
1	M12 (4-pin)

Bold items are most common.

P31P Mounting brackets

Description	Part number
L-Bracket mounting kit	**P3HKA00ML**
Foot bracket mounting kit	**P3HKA00MC**

P32P Mounting brackets

Description	Part number
L-Bracket mounting kit	**P3KKA00ML**
Foot bracket mounting kit	**P3KKA00MC**

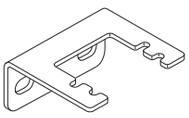

L-Bracket

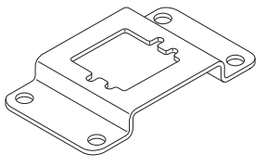

Foot Bracket

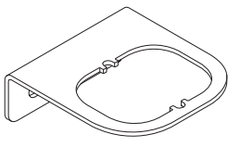

L-Bracket

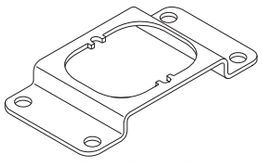

Foot Bracket

Cables

Description	Part number
2 mtr. cable with moulded straight M12x1 connector	**P8L-MC04A2A-M12**
2 mtr. cable with moulded 90 degree M12x1 connector	**P8L-MC04R2A-M12**

Note:
These brackets fit both Proportional Regulators and Combined Soft Start & Dump Valves.
Dimensions see page 68.

Technical Information

Working medium
Compressed air or inert gasses, filtered to 40µ.

Supply pressure
Max. Operating Pressure:
2 bar unit: ..... 3 bar (43.5 psig)
10 bar unit: ..... 10.5 bar (152 psig)
Min. Operating Pressure ..... P2 Pressure + 0.5 bar (7.3 psig)

Pressure control range
Available in three pressure ranges, 0-2 bar (0-29 psig), 0-7 bar (0-101.5 psig) or 0-10 bar (0-145 psig). Pressure range can be changed through the software at all times.
(parameter 19)

Temperature range
0°C up to +50°C (32°F up to 122°F)

Weights:
P31P = 0.291 kg (0.64 lbs)
P32P = 0.645 kg (1.42 lbs)

Air consumption
No consumption in stable regulated situation.

Display
The regulator is provided with a digital display, indicating the output pressure, either in bar or psig.
The factory setting is as indicated on the label, can be changed through to software at all times (parameter 14)

Supply voltage
24 VDC +/- 10%

Power consumption
Max. 1.1W with unloaded signal outputs

Control signals
The electronic pressure regulator can be externally controlled through an analogue control signal of either
0-10V or 4-20mA. (parameter 4).

Output signals
As soon as the output pressure is within the signal band a signal is given of 24VDC, PNP Ri = 1 kOhm
Outside the signal band this connection is 0V.

Connections
(In case of output signal (Option D)
Central M12 connector 4-pole
The electrical connections are as follows:

Pin No.		Function	Color
1	24 V	Supply	Brown
2	0 to 10 V	Control Signal Ri = 100k Ω	White
	4 to 20mA	Control Signal Ri = 500 Ω	
3	0 V (GND)	Supply	Blue
4	24 V	Alarm Output Signal	Black

Schematic

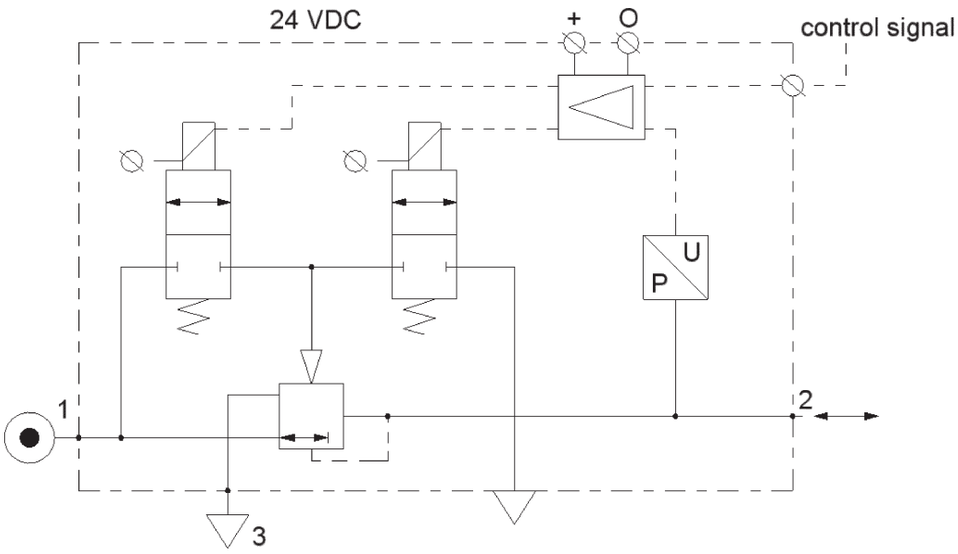

Technical information

Dead band
The dead band is preset at 1.3% of Full Scale*, adjustable via parameter 13.

Accuracy
Linearity: = < 0.3% of Full Scale.*

Proportional band
The proportional band is preset at 10% of Full Scale.*

Fail safe operation
- If the P31P / P32P unit has an “0” or “A” in the 12th digit of the model number
  - When the supply voltage drops, the electronic control reverts to the fail safe mode. The last known output pressure is maintained at approximately the same level depending upon air consumption. The digital display indicates the last known pressure setting.
  - When the supply voltage is reinstated to the correct level, the valve moves from the fail safe mode and the output pressure immediately follows the control signal requirement. The display indicates the actual output pressure.
  - Note: In the event of loss of both power and inlet pressure the unit will exhaust downstream pressure.
- If the P31P / P32P unit has an “E” in the 12th digit of the model number
  - When the supply voltage drops, the electronic control reverts to “Forced Exhaust Mode” and will automatically exhaust the downstream (regulated) pressure.
  - When the supply voltage is reinstated to the correct level the unit will return to normal operation and follows the control signal requirement. The display indicates the actual pressure.
- If the unit has been programmed in manual mode (not with a control signal) the unit will EXHAUST and the regulator will need to be reset when power is applied.

Full exhaust
Complete exhaust of the regulator is defined as
P2 ≤ 1% Full Scale

* Full scale (F.S.)
For 2 bar (29 psig) versions this will be 2 bar (29 psig), for the 10 bar (145 psig) version full scale will be 10 bar (145 psig).

Degree of protection
IP65

EU conformity
CE: standard
EMC: according to directive 89/336/EEC
The new pressure regulator is in accordance with:

EN 61000-6-1:2001 **EN 61000-6-2:2001**
EN 61000-6-3:2001 **EN 61000-6-4:2001**

These standards ensure that this unit meets the highest level of EMC protection.

Mounting position
Preferably vertical, with the cable gland on top.

Materials: P31P & P32P
- Magnet Core ..... Steel
- Solenoid Valve Poppet ..... FPM
- Solenoid Valve Housing ..... Techno Polymer
- Regulator Body (P31P & P32P versions) ..... Aluminum
- Regulator Top Housing ..... Nylon
- Valve Head ..... Brass & NBR
- Remaining Seals ..... NBR

Advanced functionality

Pilot valve protection
When the required output pressure can not be achieved because of a lack of input pressure the unit will open fully and will display NoP. Approximately every 10 seconds the unit will retry. The output pressure will then be approximately equal to the inlet pressure. As soon as the input pressure is back on the required level, the normal control function follows.

Safety exhaust
Should the **control signal** fall below 0.1 volts the valve will automatically dump downstream system pressure .

Input protection
The unit has built-in protection against failure and burnout resulting from incorrect input value, typically:

The 24VDC supply is incorrectly connected to the setpoint input, the display will show ‘OL’, as an overload indication. The unit will need to be rewired and when correctly connected will operate normally.

The overload indicator ‘OL’ will also appear should the wrong input value be applied or the wrong input value be programmed: 4 - 20m instead of 0 - 10V. To correct this a different set point value should be input or the unit reprogrammed to correct the set point value acceptance. (via parameter 4).

Response time	P31P	P32P
2 to 4 bar	25 msecs	35 msecs
1 to 6 bar	55 msecs	135 msecs
4 to 2 bar	70 msecs	85 msecs
6 to 1 bar	80 msecs	225 msecs

To fill volume of:
100cm^3 - P31P
330cm^3 - P32P
connected to the outlet of the regulator.

Settings
The regulator is pre-set at the factory. If required, adjustments can be made.

Flow Charts

P31P Regulator 1/4” Ports

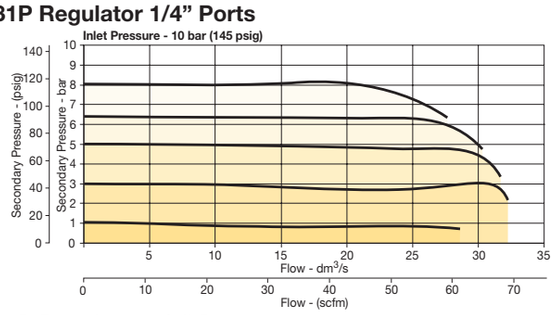

P32P Regulator 1/2” Ports

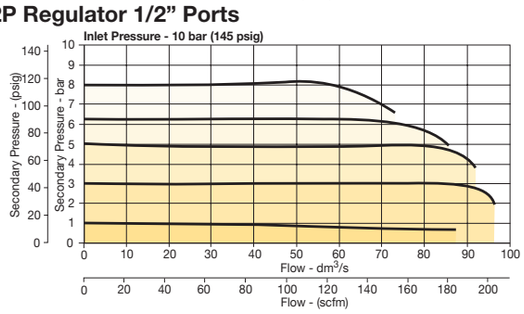

How to change parameters

Pressing the Accept key “acc” for more than 3 seconds, will activate parameter change mode. The user can then select the parameters by pressing up or down key. (display will show Pxx). When parameter number is correct, pressing accept again will enter parameter number.(display will show parameter value).

Pressing the up or down key will change the parameter itself. (display will flash indicating parameter editing mode). Pressing the accept key will accept the new parameter value. (all digits will flash whilst being accepted).

After releasing all keys , the next parameter number will be presented on the display. (you may step to the next parameter). When no key is pressed, after 3 seconds the display will show the actual output pressure.

When the unit is initially powered up allow approximately 10 seconds for the unit to “boot-up” before changing parameter settings.

Only parameter numbers 0, 4, 6, 8, 9, 14, 18, 19, 20, 12, 13 and 21 are accessible to edit. All other parameters are fixed.

Manual mode:

When keys DOWN and UP are pressed during startup, (connecting to the 24V power supply) manual mode is activated. This means that the user is able to in/decrease the output pressure of the regulator, by pressing the UP or DOWN key. During this action the display will blink, indicating that the manual mode is activated. After powering up again, the unit will revert back to normal mode.

Back to Factory Setting

After start up. (Power is on)
Entering this value in parameter 0 will store the calibrated factory data into the working parameters.
(Default calibration data is used)

Parameter Number 0 – Reset Back to Factory Settings

Step	1	2	3	4	5	
Press	acc 3-6 seconds	▼ or ▲	acc	▼ or ▲	acc	
Until Display Reads	Pxx	P00	000. Flashing Decimal	003. Flashing Decimal	003 Flashing	P01
Description	Accesses changeable parameters.	Accesses parameter no. 0.	Displays current parameter value.	Edits parameter. 3 = standard factory settings. If other than 3, use Up or Down Arrow and accept 3	Accepts and saves new parameter setting.	Sequences to next parameter.

Set Control Signal

The unit is factory set for 0-10 V control signal. If 4-20 mA control signal is required, change parameter 4.

Parameter Number 4 – Set Control Signal in Volts or Milliamps

Step	1	2	3	4	5	
Press	acc 3-6 seconds	▼ or ▲	acc	▼ or ▲	acc	
Until Display Reads	Pxx	P04	001. Flashing Decimal	000. Flashing Decimal	000 Flashing	P05
Description	Accesses changeable parameters.	Accesses parameter no. 4.	Displays current parameter value. 1 = V 0 = mA	Edits parameter.	Accepts and saves new parameter setting.	Sequences to next parameter.

Set Output Signal

Parameter 6 is used to set the type of output signal to your PLC.
This parameter is used as follows:
Output Signal option “0” = Digital Output – PNP

- Factory set at “0” Non Adjustable

Output Signal option “P” = Digital PNP or Analog 1-10V

- Factory set at “1” for Analog Signal
- Convert to Digital PNP by changing parameter to “0” setting

Output Signal option “N” = Digital NPN or Analog 1-10V

- Factory set at “1” Analog Signal
- Convert to Digital NPN by changing parameter to “0”

Output Signal option “M” = Analog 4-20 mA

- Factory set at “2” Non Adjustable

Parameter Number 6 – Set Output Signal

Step	1	2	3	4	5	
Press	acc 3-6 seconds	▼ or ▲	acc	▼ or ▲	acc	
Until Display Reads	Pxx	P06	001.	###. Flashing Decimal (Value 0, 1 or 2)	###. Flashing	P07
Description	Accesses changeable parameters.	Accesses parameter no. 6.	Displays current parameter value. 1 = m factory default for P3H with analog options	Edits parameter. 0 = digital (NPN or PNP) 1 = analog 0..10V 2 = analog 4..20 mA	Accepts and saves new parameter setting.	Sequences to next parameter.

Adjust Span Analog Output Signal

Set value is a % of Full Analog range. As an example for a 0-10V output signal, the original factory setting of 100% will give you an adjustment of 0-10V. If you reset Parameter 8 to 50%, the new output range would be 0-5V or 50% of the full range.

In the event that the output signal is to low, in a certain application, you can adjust it by increasing Parameter 8 to a maximum value of 130% of scale.

Note that all values are nominal and that an actual measurement may be required to ensure signal strength.

Parameter Number 8 – Adjust Span Analog Output Signal

Step	1	2	3	4	5	
Press	acc 3-6 seconds	▼ or ▲	acc	▼ or ▲	acc	
Until Display Reads	Pxx	P08	100. Flashing Decimal (For 2 bar versions value = 92)	###. Flashing Decimal (Value between 0 and 130)	###. Flashing	P09
Description	Accesses changeable parameters.	Accesses parameter no. 8.	Displays current parameter value.	Edits parameter.	Accepts and saves new parameter setting and implements the new analog signal span.	Sequences to next parameter.

Adjust Digital Display

If necessary, adjustments can be made to the digital display when using an external pressure sensor.

Parameter Number 9 – Adjust Digital Display Value (Pressure Calibration)

Step	1	2	3	4	5	
Press	acc 3-6 seconds	▼ or ▲	acc	▼ or ▲	acc	
Until Display Reads	Pxx	P09	###.	###.	###	P 10
			Flashing Decimal	Flashing Decimal	Flashing	
Description	Accesses changeable parameters.	Accesses parameter no. 9.	Displays current digital display	Use up or down arrows and accept to adjust the display value if using an external pressure sensor.	Accepts and saves new parameter setting.	Sequences to next parameter.

Set Pressure Scale

Units with NPT port threads are supplied with a factory set psig pressure scale. Use parameter 14 to change scale to bar.

Parameter Number 14 – Set Pressure Scale in psig or bar

Step	1	2	3	4	5	
Press	acc 3-6 seconds	▼ or ▲	acc	▼ or ▲	acc	
Until Display Reads	Pxx	P 14	001.	000.	000	P 15
			Flashing Decimal	Flashing Decimal	Flashing	
Description	Accesses changeable parameters.	Accesses parameter no. 14.	Displays current parameter value. 1 = psig 0 = bar 2 = MPA	Edits parameter.	Accepts and saves new parameter setting.	Sequences to next parameter.

Preset Minimum Pressure

If there is a need for a pre-set Minimum pressure, use parameter 18. (Note: preset pressure is affected by % P19.)

Parameter Number 18 – Set Minimum Preset Pressure

Step	1	2	3	4	5	
Press	acc 3-6 seconds	▼ or ▲	acc	▼ or ▲	acc	
Until Display Reads	Pxx	P 18	000.	###. Flashing Decimal (value between 0 and 200)	### Flashing	P 19
Description	Accesses changeable parameters.	Accesses parameter no. 18.	Displays current parameter value. Incremental value is: 2 bar unit: x 2 mbar x % P19 10 bar unit: x 10 mbar x % P19	Edits parameter.	Accepts and saves new parameter setting.	Sequences to next parameter.

Set Pressure Correction

Pressure correction allows the user to set a Maximum pressure as a percentage of secondary pressure F.S.
Example: If F.S. is 10 bar, set parameter 19 to 50 for Maximum preset pressure of 5 bar.
Pressure correction also affects the Minimum preset pressure in parameter 18.
Example: If F.S. is 10 bar and parameter 18 is set to a value of 100 (1 bar), and parameter 19 is set to 50%, then the actual Minimum preset pressure seen is 0.5 bar.

Parameter Number 19 – Set Maximum Preset Pressure

Step	1	2	3	4	5	
Press	acc 3-6 seconds	▼ or ▲	acc	▼ or ▲	acc	
Until Display Reads	Pxx	P 19	100.	###. Flashing Decimal (value between 0 and 100)	### Flashing	P20
Description	Accesses changeable parameters.	Accesses parameter no. 19.	Displays current parameter value. Incremental value is: % of F.S.	Edits parameter.	Accepts and saves new parameter setting.	Sequences to next parameter.

Behavior Control

The regulation speed of the pressure regulator can be modified by means of one parameter. (P 20)
The value in this parameter has a range from 0-5. A higher value indicates slower regulation speed, but will be more stable.

Parameter Number 20 – Set Behavior Control

Step	1	2	3	4	5	
Press	acc 3-6 seconds	▼ or ▲	acc	▼ or ▲	acc	
Until Display Reads	Pxx	P20	003.	###. Flashing Decimal (value between 0 and 5)	### Flashing	P21
Description	Accesses changeable parameters.	Accesses parameter no. 20.	Displays current parameter value.	Edits parameter 0 = custom set* 1 = fastest (narrow proportional band) 2 = fast 3 = normal 4 = slow 5 = slowest (proportional band is broad)	Accepts and saves new parameter setting.	Sequences to next parameter.

* When the value 0 is entered, you are able to create your own custom settings true parameters 12, 13 and 21.

Fine Settings

Set Proportional Band

Proportional band is used for setting the reaction sensitivity of the regulator. The displayed value is X 10 mbar and has a range between 50 (0.5 bar) and 250 (2.5 bar).

Parameter Number 12 – Set Proportional Band (P20 Must be Set to 0)

Step	1	2	3	4	5	
Press	acc 3-6 seconds	▼ or ▲	acc	▼ or ▲	acc	
Until Display Reads	Pxx	P12	100.	###. Flashing Decimal (value between 50 and 250)	### Flashing	P13
Description	Accesses changeable parameters.	Accesses parameter no. 12.	Displays current parameter value. Incremental value is: x 10 mbar	Edits parameter.	Accepts and saves new parameter setting.	Sequences to next parameter.

Set Deadband

Deadband is the Minimum limit of accuracy at which the regulator is set for normal operation. The displayed value is X 10 mbar and has a range between 4 (40 mbar) and 40 (400 mbar).

Parameter Number 13 – Set Deadband (P20 Must be Set to 0)

Step	1	2	3	4	5	
Press	acc 3-6 seconds	▼ or ▲	acc	▼ or ▲	acc	
Until Display Reads	Pxx	P13	015.	###. Flashing Decimal (value between 4 and 40)	### Flashing	P14
Description	Accesses changeable parameters.	Accesses parameter no. 13.	Displays current parameter value. Incremental value is x 10 mbar	Edits parameter.	Accepts and saves new parameter setting.	Sequences to next parameter.

Proportional Effect

Parameter Number 21 – Set Proportional Effect (P20 Must be Set to 0)

Step	1	2	3	4	5	
Press	acc 3-6 seconds	▼ or ▲	acc	▼ or ▲	acc	
Until Display Reads	Pxx	P21	010.	###. Flashing Decimal (value between 5 and 100)	### Flashing	P22
Description	Accesses changeable parameters.	Accesses parameter no. 21.	Displays current parameter value.	Edits parameter. 5 = fastest regulation 100 = slowest regulation.	Accepts and saves new parameter setting.	Sequences to next parameter.

Parameter Number 39 – Displays Current Software Version

Step	1	2	3	
Press	acc 3-6 seconds	▼ or ▲	acc	
Until Display Reads	Pxx	P39	### Flashing Decimal	
Description	Accesses changeable parameters.	Accesses parameter no. 39.	Displays current parameter value. XXX = current software version	

P31P

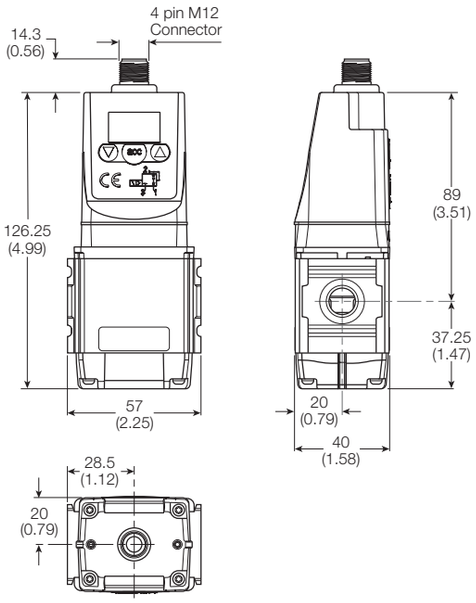

P32P

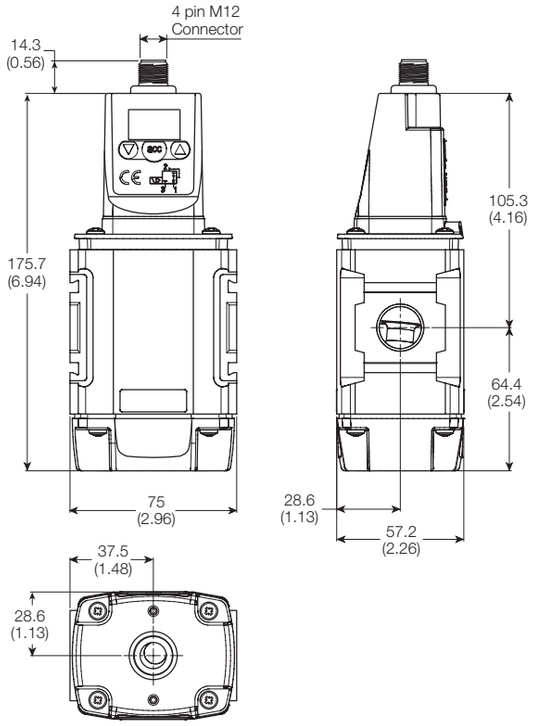

L-Bracket

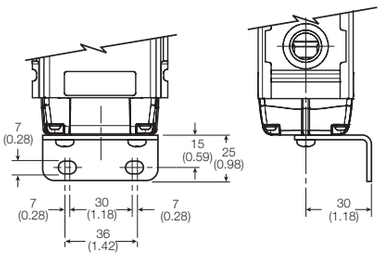

L-Bracket

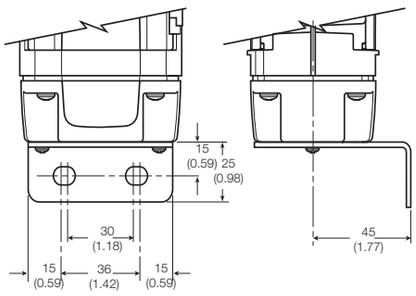

Foot Bracket

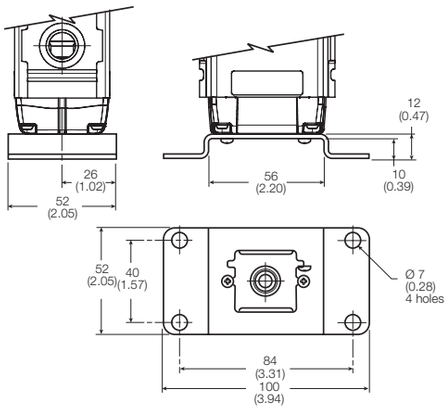

Foot Bracket

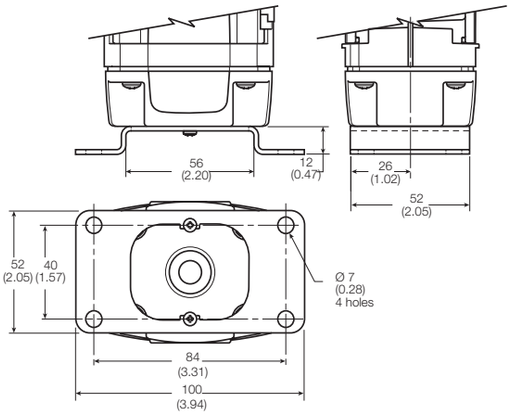

Dimensions are in mm (Inches)

Dump Valve

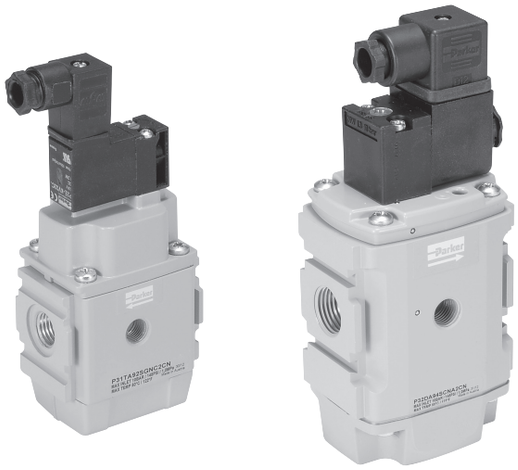

Symbol

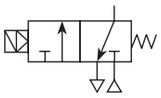

- Modular design with 1/4" or 1/2" integral ports (NPT & BSPP)
- The 3-way, 2-position function automatically dumps downstream pressure on the loss of pilot signal
- Solenoid or air pilot options
- High flow & exhaust capability
- Silencer included

Remotely operated dump valves automatically shut off upstream pressure and exhaust the downstream pressure when the pilot pressure is released.

To maintain these units in the open position a pilot supply to the air pilot operated version or an electrical signal to the solenoid operated version must be maintained. The valve will automatically dump when the holding signal is removed.

Options:

P31DA [ ] [ ] [ ] [ ] **N** [ ] [ ]

Body size

Dump valve (1/4")	P31DA
Dump valve (1/2")	P32DA

Thread type

BSPP	1
NPT	9

Port size

Global modular mini (1/4")	2
Global modular compact (1/2")	4

Pilot type

P	External air pilot
S	Solenoid pilot

Actuator interface

G	15mm solenoid (P31 only)
C	30mm solenoid
P	Threaded Air Pilot

Solenoid type only

Solenoid type

0	None (For P32 series - operator is fitted to valve)
C	15mm (P31 series only)
A	30mm CNOMO coil (P32 only)
D	30mm CNOMO coil (M12 connection) (P32 only)

Solenoid voltage

000	Solenoid / Coil not fitted
2CN	24VDC non locking manual overide
3GN	120VAC non locking manual overide
1FN	120VAC non locking manual override (P31 series only)

Note:
P32 unit used for both P32 & P33 series
Bold items are most common.

Port size	Description	Flow dm^3/s (scfm)	Max. bar (psig)	Height mm (inches)	Width mm (inches)	Depth mm (inches)	Weight kg (lbs)	Part number†
1/4"	Solenoid operated (not included)	17 (36)	10 (150)	115.6 (4.5)	57 (2.2)	40 (1.5)	0.37 (0.8)	**P31DA12SGN0000**
1/4"	24VDC Solenoid & cable plug	17 (36)	10 (150)	166‡ (6.5)	57 (2.2)	40 (1.5)	0.41 (0.9)	**P31DA12SGNC2CN**
1/4"	External air pilot operated	17 (36)	17 (250)	115.6 (4.5)	57 (2.2)	40 (1.5)	0.37 (0.8)	**P31DA12PPN**
1/2"	Solenoid operated (not included)	51 (108)	10 (150)	162.5‡ (6.3)	75 (2.9)	57.2 (2.2)	0.69 (1.5)	**P32DA14SCN0000**
1/2"	24VDC 30mm coil & cable plug incl.	51 (108)	10 (150)	227.5‡ (8.9)	75 (2.9)	57.2 (2.2)	0.91 (2.0)	**P32DA14SCNA2CN**
1/2"	External air pilot operated	51 (108)	17 (250)	162.5‡ (6.3)	75 (2.9)	57.2 (2.2)	0.87 (1.9)	**P32DA14PPN**

‡ Includes exhaust silencer
† **Standard part numbers shown in bold. For other models refer to Options chart above.**

Technical Information

Fluid:		Compressed air
Max. pressure solenoid operated:		10 bar (150 psig)
Max. pressure air pilot operated:		17 bar (250 psig)
Min. operating pressure:		3 bar (44 psig)
Temperature Max.* solenoid operated:		-10°C to 50°C (14°F to 122°F)
Temperature Max.* air pilot operated:		-20°C to 80°C (-4°F to 176°F)
Air pilot port:		1/8"
Exhaust port:		**P31D** - 1/4" / **P32D** - 1/2"
Gauge port:		**P31D** - 1/8" / **P32D** - 1/4"
Typical flow with 6.3 bar inlet pressure and 1 bar pressure drop:	**P31D**	17 dm^3/s (36 scfm)
	P32D	51 dm^3/s (108 scfm)

* Air supply must be dry enough to avoid ice formation at temperatures below +2°C
Snap pressure: Full flow when downstream pressure reaches 50% of the inlet pressure

Material Specifications

Body:	Aluminum
Body cover:	Polyester
Seals:	Nitrile NBR

Mounting Brackets

Description	Part number **P31D**
L-bracket mounting kit	**P3HKA00ML**
Foot bracket mounting kit	**P3HKA00MC**

Note:
For solenoid operators and cable plugs (connectors) see pages 74 to 75.

Flow Charts

P31DA 1/4" Remote Dump Valve

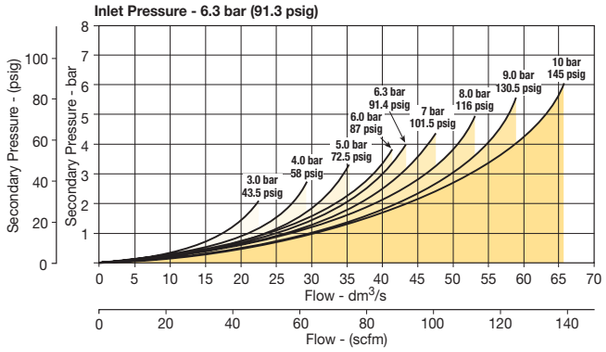

P32DA 1/2" Remote Dump Valve

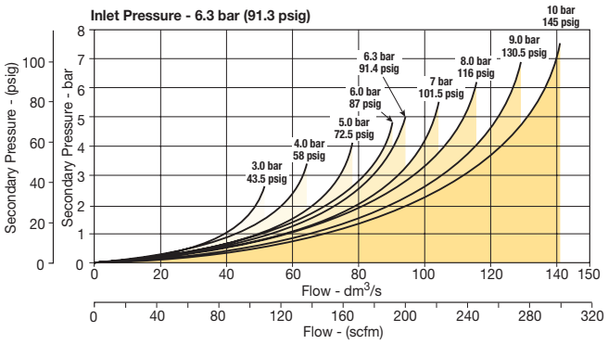

Dimensions mm (inches)

P31D

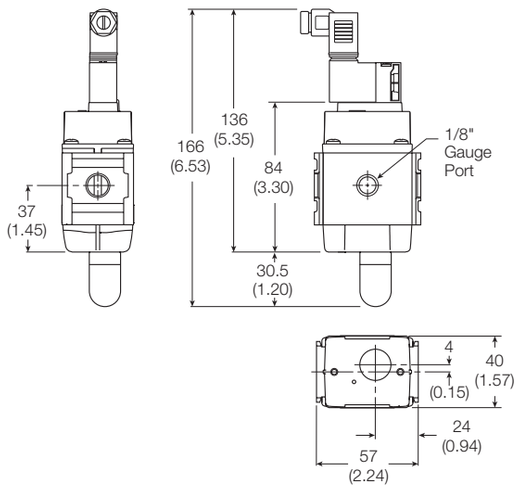

P32D

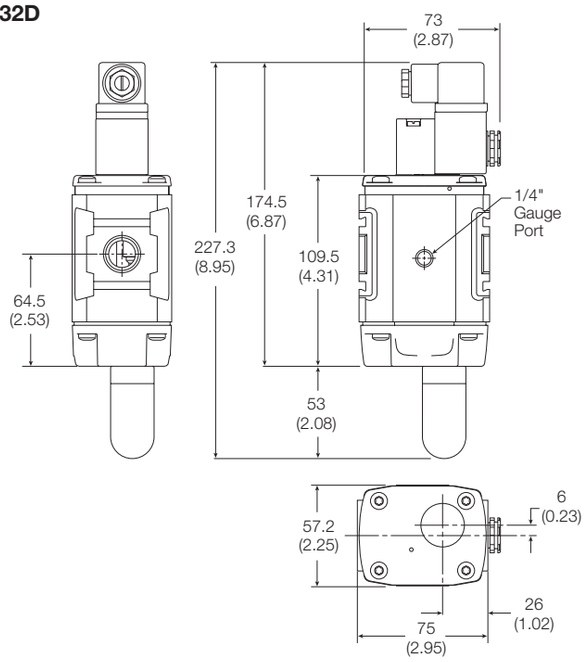

For mounting brackets see page 86.

Soft Start Valve

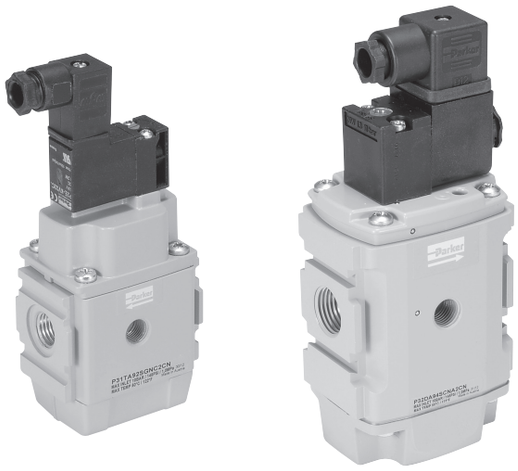

Symbol

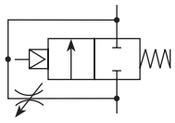

- Modular design with 1/4" or 1/2" integral ports (NPT & BSPP)
- The 2-way, 2-position function provides for the safe introduction of pressure
- Adjustable slow start
- Solenoid or air pilot options
- High flow

Parker Global Series Soft Start Valves, provide for the safe introduction of pressure to machines or systems. Soft Start Valves, allow the pressure to gradually build to the set point before fully opening to deliver full flow at line pressure.

The controlled introduction of pressure can be an important safety factor and prevent damage to tooling when air pressure is introduced at machine or system start up.

Note: Soft Start Valves must be installed downstream of a 3/2 valve with exhaust capability

Options:

P31SA [ ] [ ] [ ] [ ] **N** [ ] [ ]

Solenoid type only

Body size

Soft start	P31SA
Soft start	P32SA

Thread type

BSPP	**1**
NPT	9

Port size

Global modular mini (1/4")	**2**
Global modular compact (1/2")	**4**

Pilot type

P	**External air pilot**
S	**Solenoid pilot**
Y	**Internal air pilot**

Actuator interface

0	**Internal Pilot**
G	**15mm solenoid (P31 only)**
C	**30mm solenoid**
P*	**Threaded air pilot**

Solenoid type

0	**None (For P32 series - Operator is fitted to valve)**
C	**15mm (P31 series only)**
A	**30mm CNOMO coil (P32 only)**
D	**30mm CNOMO coil (M12 connection) (P32 only)**

Solenoid voltage

000	**Solenoid / Coil not fitted**
2CN	**24VDC non locking manual overide**
3GN	120VAC non locking manual overide
1FN	120VAC non locking manual override (P31 series only)

Note:
P32 unit used for both P32 & P33 series
Bold items are most common.

Port size	Description	Flow dm^3/s (scfm)	Max. bar (psig)	Height mm (inches)	Width mm (inches)	Depth mm (inches)	Weight kg (lbs)	Part number†
1/4"	Solenoid operated (not included)	17 (36)	10 (150)	115.6 (4.5)	57 (2.2)	40 (1.5)	0.37 (0.8)	**P31SA12SGN0000**
1/4"	24VDC Solenoid & cable plug	17 (36)	10 (150)	166.0 (6.5)	57 (2.2)	40 (1.5)	0.41 (0.9)	**P31SA12SGNC2CN**
1/4"	Internal air pilot operated	17 (36)	17 (250)	115.6 (4.5)	57 (2.2)	40 (1.5)	0.37 (0.8)	**P31SA12Y0N**
1/4"	External air pilot (1/8" threaded)	17 (36)	17 (250)	115.6 (4.5)	57 (2.2)	40 (1.5)	0.37 (0.8)	**P31SA12PPN**
1/2"	Solenoid operated (not included)	48 (101)	10 (150)	162.5 (6.3)	88 (3.4)	57.2 (2.28)	0.87 (1.5)	**P32SA14SCN0000**
1/2"	24VDC 30mm coil & cable plug	48 (101)	10 (150)	227.5 (8.9)	88 (3.4)	57.2 (2.28)	0.90 (2.0)	**P32SA14SCNA2CN**
1/2"	Internal air pilot operated	48 (101)	17 (250)	162.5 (6.3)	75 (2.9)	57.2 (2.28)	0.90 (2.0)	**P32SA14Y0N**
1/2"	External air pilot (1/8 threaded)	48 (101)	17 (250)	162.5 (6.3)	75 (2.9)	57.2 (2.28)	0.87 (1.5)	**P32SA14PPN**

† **Standard part numbers shown in bold. For other models refer to Options chart above.**

Technical Information

Fluid:		Compressed air
Max. pressure solenoid operated:		10 bar (150 psig)
Max. pressure air pilot operated:		17 bar (250 psig)
Min. operating pressure:		3 bar (44 psig)
Temperature Max.* solenoid operated:		-10°C to 50°C (14°F to 122°F)
Temperature Max.* air pilot operated:		-20°C to 80°C (-4°F to 176°F)
Air pilot port:		1/8"
Gauge port:		**P31S** - 1/8" / **P32S** - 1/4"
Typical flow with 6.3 bar inlet pressure and 1 bar pressure drop:	**P31S**	17 dm^3/s (36 scfm)
	P32S	48 dm^3/s (101 scfm)

* Air supply must be dry enough to avoid ice formation at temperatures below +2°C
Snap pressure: Full flow when downstream pressure reaches 50% of the inlet pressure

Material Specifications

Body:	Aluminum
Body cover:	Polyester
Seals:	Nitrile NBR

Mounting Brackets

Description	Part number **P31S**
L-bracket mounting kit	**P3HKA00ML**
Foot bracket mounting kit	**P3HKA00MC**

Note:
For solenoid operators and cable plugs (connectors) see pages 74 to 75.

Flow Charts

P31SA 1/4" Soft Start Valve

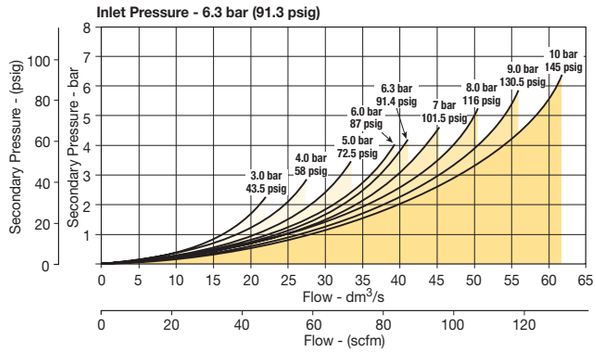

P32SA 1/2" Soft Start Valve

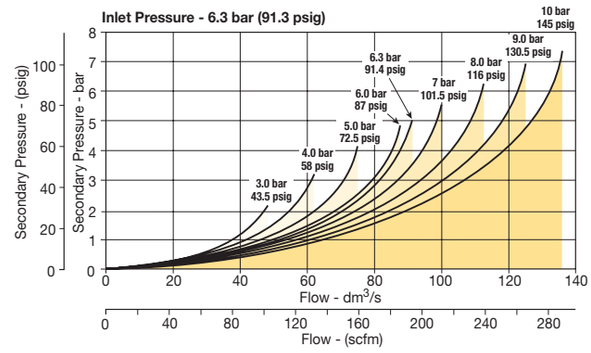

Dimensions mm (inches)

P31S

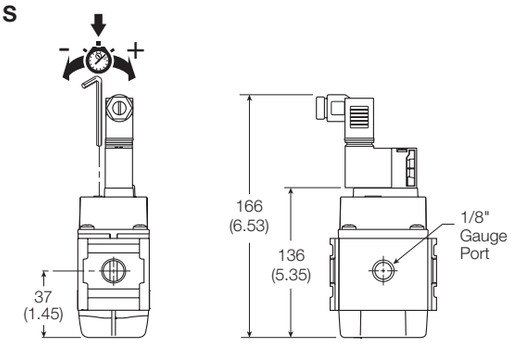

P32S

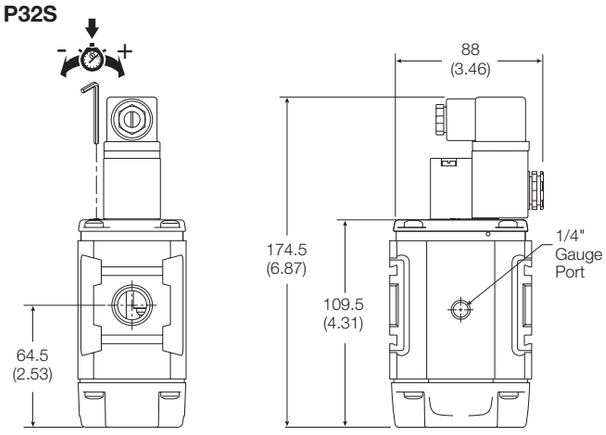

Soft Start Function:

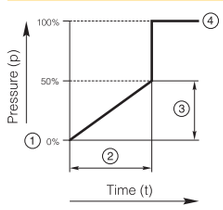

① Start signal
② Switching time delay
③ Gradual pressure build up
④ Operating pressure p^2 (=p^1)

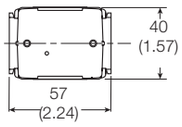

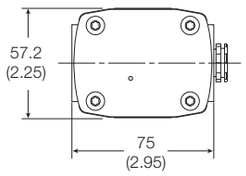

For mounting brackets see page 86.

Combined Soft Start / Dump Valve

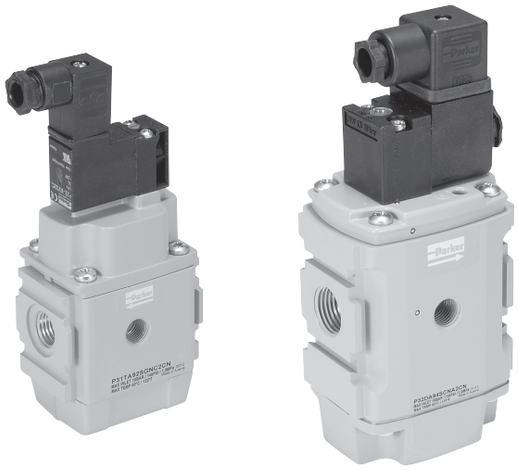

Symbol

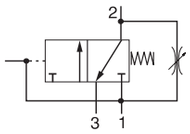

- Modular design with 1/4" or 1/2" integral ports (NPT & BSPP)
- Provides for the safe introduction of pressure
- The 3-way, 2-position function automatically dumps downstream pressure on the loss of pilot signal
- Adjustable slow start
- Solenoid or air pilot options
- High flow & exhaust capability
- Silencer included

Parker Global Series Combined Soft Start / Dump Valves, provide for the safe introduction of pressure to machines or systems. Soft Start / Dump Valves when set, allow the pressure to gradually build to the set point before fully opening to deliver full flow at line pressure.

The controlled introduction of pressure can be an important safety factor and prevent damage to tooling when air pressure is introduced at machine or system start up.

To maintain these units in the open position a pilot supply to the air pilot operated version or an electrical signal to the solenoid operated version must be maintained. The valve will automatically dump when the holding signal is removed.

Options:

P31TA [ ] [ ] [ ] [ ] **N** [ ] [ ]

Body size

Soft start / dump valve (1/4")	P31TA
Soft start / dump valve (1/2")	P32TA

Thread type

BSPP	**1**
NPT	9

Port size

Global modular mini (1/4")	**2**
Global modular compact (1/2")	**4**

Pilot type

P	**External air pilot**
S	**Solenoid pilot**

Actuator interface

G	**15mm solenoid (P31 only)**
C	**30mm solenoid**
P	**Threaded air pilot**

Solenoid type only

Solenoid type

0	**None (For P32 series - Operator is fitted to valve)**
C	**15mm (P31 series only)**
A	**30mm CNOMO coil (P32 only)**
D	**30mm CNOMO coil (M12 connection) (P32 only)**

Solenoid voltage

000	**Solenoid / Coil not fitted**
2CN	**24VDC non locking manual overide**
3GN	120VAC non locking manual overide
1FN	120VAC non locking manual override (P31 series only)

Note:
P32 unit used for both P32 & P33 series
Bold items are most common.

Port size	Description	Flow‡ dm^3/s (scfm)	Max. bar (psig)	Height mm (inches)	Width mm (inches)	Depth mm (inches)	Weight kg (lbs)	Part number†
1/4"	Solenoid operated (not included)	17 (36)	10 (150)	115.6 (4.5)	57 (2.2)	40 (1.5)	0.37 (0.8)	**P31TA12SGN0000**
1/4"	24VDC Solenoid & cable plug	17 (36)	10 (150)	166‡ (6.5)	57 (2.2)	40 (1.5)	0.41 (0.9)	**P31TA12SGNC2CN**
1/4"	External air pilot operated	17 (36)	17 (250)	115.6 (4.5)	57 (2.2)	40 (1.5)	0.37 (0.8)	**P31TA12PPN**
1/2"	Solenoid operated (not included)	46 (97)	10 (150)	162.5‡ (6.3)	88 (3.4)	57.2 (2.2)	0.87 (1.9)	**P32TA14SCN0000**
1/2"	24VDC 30mm coil & cable plug incl.	46 (97)	10 (150)	227.5‡ (8.9)	88 (3.4)	57.2 (2.2)	0.91 (2.0)	**P32TA14SCNA2CN**
1/2"	External air pilot operated	46 (97)	17 (250)	162.5‡ (6.3)	75 (2.9)	57.2 (2.2)	0.87 (1.9)	**P32TA14PPN**

‡ Includes exhaust silencer. Flow with 6.3 bar (91.3) psig) inlet and 1 bar (14.5 psig) pressure drop.
† **Standard part numbers shown in bold. For other models refer to Options chart above.**

Technical Information

Fluid:		Compressed air
Max. pressure solenoid operated:		10 bar (150 psig)
Max. pressure air pilot operated:		17 bar (250 psig)
Min. operating pressure:		3 bar (44 psig)
Temperature Max.* solenoid operated:		-10°C to 50°C (14°F to 122°F)
Temperature Max.* air pilot operated:		-20°C to 80°C (-4°F to 176°F)
Air pilot port:		1/8"
Exhaust port:		**P31T** - 1/4" / **P32T** - 1/2"
Gauge port:		**P31T** - 1/8" / **P32T** - 1/4"
Typical flow with 6.3 bar inlet pressure and 1 bar pressure drop:	**P31T**	17 dm^3/s (36 scfm)
	P32T	48 dm^3/s (101 scfm)

* Air supply must be dry enough to avoid ice formation at temperatures below +2°C
Snap pressure: Full flow when downstream pressure reaches 50% of the inlet pressure

Material Specifications

Body:	Aluminum
Body cover:	Polyester
Seals:	Nitrile NBR

Mounting Brackets

Description	Part number **P31T**
L-bracket mounting kit	**P3HKA00ML**
Foot bracket mounting kit	**P3HKA00MC**

Note:
For solenoid operators and cable plugs (connectors) see pages 74 to 75.

Flow Charts

P31TA 1/4" Soft Start & Dump Valve

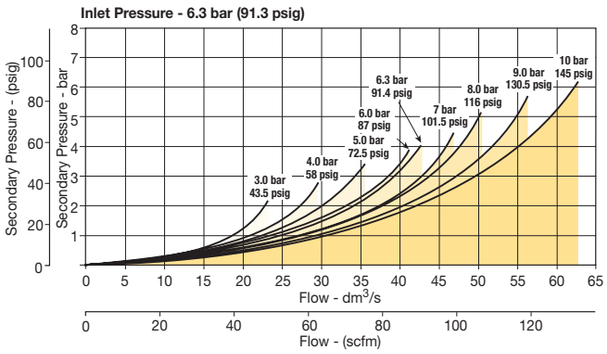

P32TA 1/2" Soft Start & Dump Valve

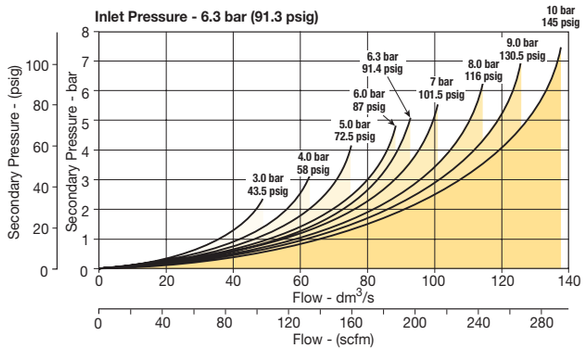

Dimensions mm (inches)

P31T

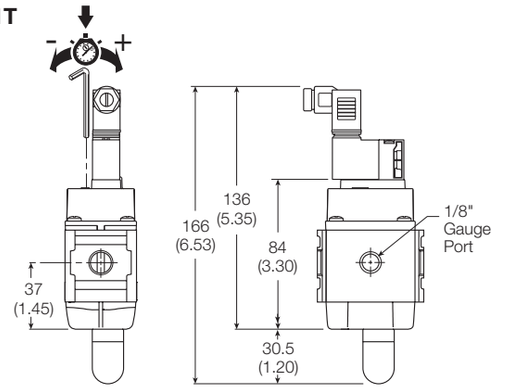

Soft Start Function:

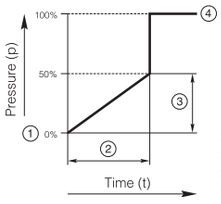

① Start signal
② Switching time delay
③ Gradual pressure build up
④ Operating pressure p^2 (=p^1)

P32T

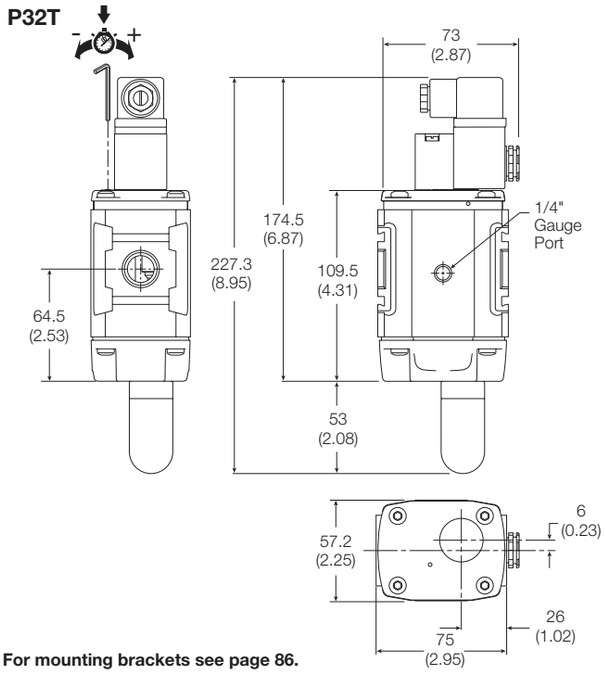

For mounting brackets see page 86.

Solenoid operator - CNOMO

Order key

P 2 F P 2 3 N 4 B

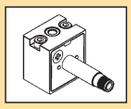

	Operator Type
2	CNOMO 22 x 30 Plastic

	Pressure / Temp
N	10 bar / -10°C to +50°C

	Manual / Override
B	Non locking - monostable - Flush - Brass

Technical data - Solenoid operators, coil combinations

	NC Normal Operator with 30 x 30 standard coil	NC Normal Operator with 22 x 30 standard coil
Working pressure	0 to10 bar	0 to 10 bar
Ambient temperature	-10 °C to 60 °C (1)	-10 °C to 60 °C (1)
Orifice	1.3/1.5mm	1.3/1.5mm
Flow Qn	0.84 dm^3/s	0.84 dm^3/s
Power (DC)	2.7W	4.8W
Power (AC)	4.9VA	8.5VA
Voltage tolerance	+/- 10%	+/- 10%
Duty cycle	100%	100%
Insulation class	F	F
Electric connection	Form A	Industrial B
Protection	IP65	IP65
Shock & Vibration	1g	1g
Approval	UL/CSA	
Working media	All neutral media such as compressed air and inert gases.	

(1) limited to 50°C if use with 100% duty cycle

Transients

Interrupting the current through the solenoid coil produces momentary voltage peaks which, under unfavourable conditions, can amount to several hundred times the rated operating voltage. Normally, these transients do not cause problems, but to achieve the maximum life of relays in the circuit (and particularly of transistors, thyristors and integrated circuits) it is desirable to provide protection by means of voltage-dependent resistors (varistors). All connectors/cable plugs EN175301-803 with LED's include this type of circuit protection.

Materials

Pilot Valve

Body:	Polyamide
Armature tube:	Brass
Plunger & core:	Corrosion resistant Cr-Ni steel
Seals:	FKM (Viton™)
Screws:	Stainless steel

Coil

Encapsualtion material:	Thermoplastic as standard Duroplast for M12 connection

Solenoid coils with Din A or Industrial B connection

Voltage Order code DIN A Standard	30mm x 30mm Weight (Kg)	Order code Industrial B Standard	22mm x 30mm Weight (Kg)	
Direct current				
12V DC	**P2FCA445**	0.105	**P2FCB445**	0.093
24V DC	**P2FCA449**	0.105	**P2FCB449**	0.093
48V DC	**P2FCA453***	0.105	**P2FCB451**	0.093
Alternative current				
12V 50/60Hz	**P2FCA440**	0.105	**P2FCB440**	0.093
24V 50/60Hz	**P2FCA442**	0.105	**P2FCB442**	0.093
48V 50/60Hz	**P2FCA469#**	0.105		
110V 50Hz, 120V 60Hz	**P2FCA453***	0.105	**P2FCB453**	0.093
230V 50Hz, 230V 60Hz	**P2FCA457**	0.105	**P2FCB457**	0.093

* P2FCA453 is compatible with 110 V AC and 48 V DC
\# P2FCA469 is 24 V DC 6.8W or 48 V 50Hz 9.9 VA

Solenoid coils with M12 connection

Voltage	Order code Form A 30 x 30	W (Kg)	Order code Form B 22 x 30	W (Kg)
Direct current 24V DC	**P2FC6419**	0.065	**P2FC7419**	0.065

Spare Solenoid Operators

Solenoid pilot operator CNOMO NC

Description	Order code Non-lock manual override	Weight (Kg)
Standard duty	**P2FP23N4B**	0.065

Note.
Solenoid pilot operators are fitted to the Global range. Order the above part numbers for spares. The operators are supplied with mounting screws and interface 'O' rings.
Coils and connectors must be ordered separately.

Spare Solenoid Nuts

Valves requiring captured exhaust should be fitted with plastic knurled nut

Order code
P2FNP

Valves with vented exhaust are fitted with diffuser plastic nut

Order code
P2FND

Solenoid Connectors / Cable Plugs EN175301-803

	Description	Order code 15mm Form C ISO15217	Order code 22mm Form B Industrial	Order code 30mm Form A ISO4400
With large headed screw suitable for mounting in inaccessible or recess position	Standard IP65	**P8C-C**		
	24V DC LED and protection IP65	**P8C-C26C**		
	110V AC LED and protection IP65	**P8C-C21E**		
With standard screw	Standard IP65 without flying lead	**P8C-D**	**3EV10V10**	**3EV290V10**
	With LED and protection 24V AC/DC	**P8C-D26C**	**3EV10V20-24**	**3EV290V20-24**
	With LED and protection 110V AC	**P8C-D21E**	**3EV10V20-110**	**3EV290V20-110**
	With LED and protection 230V AC		**3EV10V20-230**	**3EV290V20-230**
With cable	Standard with 2m cable IP65	**P8L-C2**		
	Standard with 5m cable IP65	**P8L-C5**		
	24V AC/DC, 2m cable LED and protection IP65	**P8L-C226C**		
	24V AC/DC, 5m cable LED and protection IP65	**P8L-C526C**	**3EV10V20-24L5**	**3EV290V20-24L5**
	24V AC/DC, 10m cable LED and protection IP65	**P8L-CA26C**		
	110V AC/DC, 2m cable LED and protection IP65	**P8L-C221E**		
	110V AC/DC, 5m cable LED and protection IP65	**P8L-C521E**	**3EV10V20-110L5**	**3EV290V20-110L5**
	230V AC, 5m cable LED and protection IP65		**3EV10V20-230L5**	**3EV290V20-230L5**

Solenoid Coil & Cable Plug Dimensions (mm)

P2F - CNOMO - 22 x 30mm

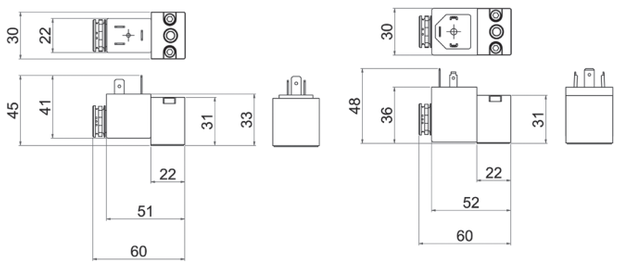

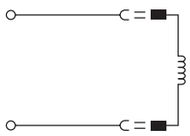

P8C-C
P8C-D
P8L-C2
P8L-C5
3EV10V10

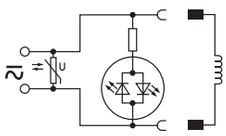

P8C-D26C	**P8L-C226C**
P8C-D21E	**P8L-C526C**
P8C-C26C	**P8L-CA26C**
P8C-C21E	**P8L-C221E**
	P8L-C521E
3EV10V20-24	**3EV10V20-24L5**
3EV10V20-110	**3EV10V20-110L5**
3EV10V20-230	**3EV10V20-230L5**

Form C
Cable plugs

P8C-C
P8C-C26C
P8C-C21E
P8C-D
P8C-D26C
P8C-D21E

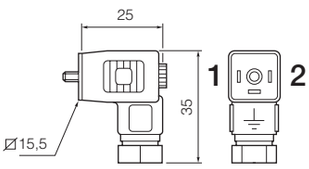

Form C
Cable plugs

P8L-C2
P8LC5
P8L-C226C
P8L-C526C
P8L-CA26C
P8L-C221E
P8L-C521E

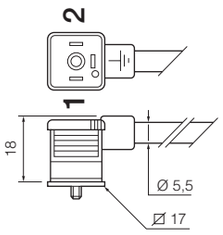

Form B
Cable plugs

3EV10V10

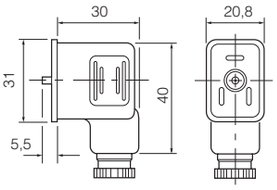

Form A
Cable plugs

3EV290V10

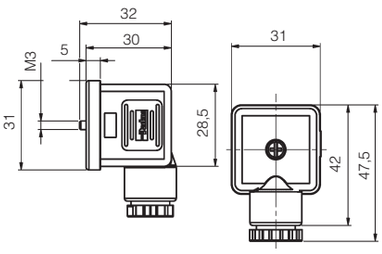

Machine Directive - EN ISO 13849-1 Global combined soft start / dump valves to meet Catergory 2

- Safetey Standard ISO13849-1 for Catergory 2, compliant with performance level. (contact the division for details).
- This product is designed to be used as a component within a system. The single unit alone cannot be considered as a Catergory 2 safetey product.
- Sensor is energised in the Dump / Exhaust position.

Note: For other Technical Data, see pages 72 - 73

Remote operated dump valve & Combined soft start dump valve

Port size	Description	Order code	Note
1/2	Solenoid operated (not included)	**P32DA14SC20000**	Product is supplied / tested and fitted with electronic sensor **P8S-GPMHX**
1/2	Solenoid operated (not included)	**P32TA14SC20000**	

For thread type: NPT **9**

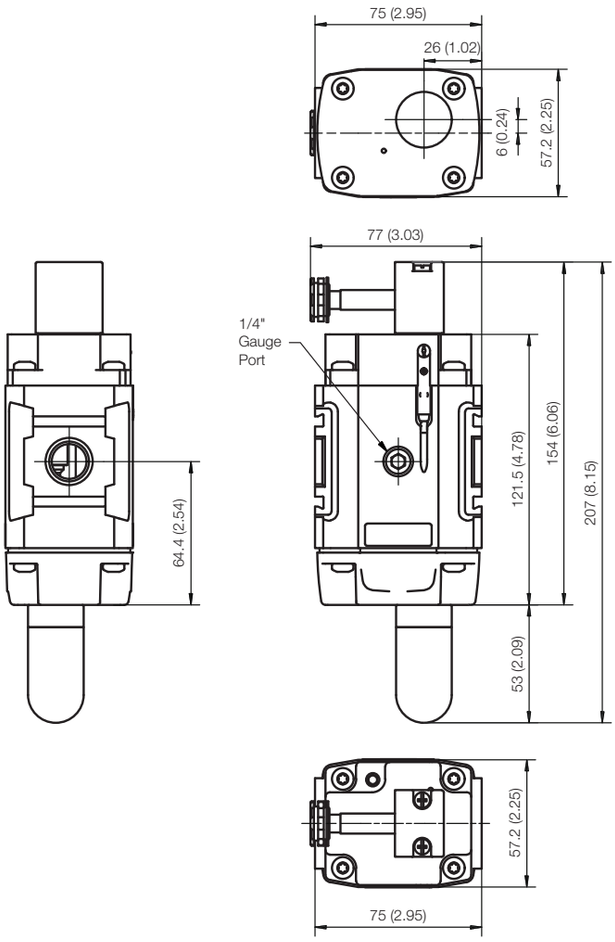

Ordering data

Electronic sensors, 10-30 V DC
PNP type, normally open : 0,27 m PUR-cable and M12 screw male connector

P8S-GPMHX

M12

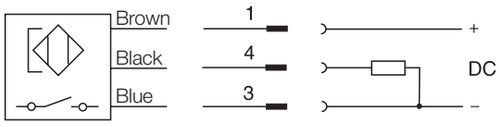

For solenoid operators and cable plugs (connectors) see pages 74 - 75

Global Products Fitted with Pressure Sensor

Additional methods of pressure monitoring, is to fit a MPS Pressure Sensor in the Global product gauge port.
See page 84-85 for details.

A reducer Male/Female fitting can be used for P32 series and Manifold accessories.

Reducer, Male/Female BSPP and Metric Thread

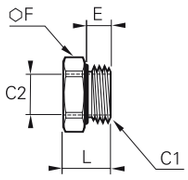

C1	C2	E	F	L	Weight (Kg)	**Order code**
G1/4	G1/8	5.5	16	9.5	0.006	**0178 13 10**
G3/8	G1/8	5.5	20	10.5	0.016	**0178 17 10**
	G1/4	5.5	20	10.5	0.011	**0178 17 13**
G1/2	G1/4	7.5	24	12.5	0.024	**0178 21 13**
	G3/8	7.5	24	12.5	0.016	**0178 21 17**
G3/4	G1/2	7.5	32	13.5	0.035	**0178 27 21**

With integrated O-ring seal

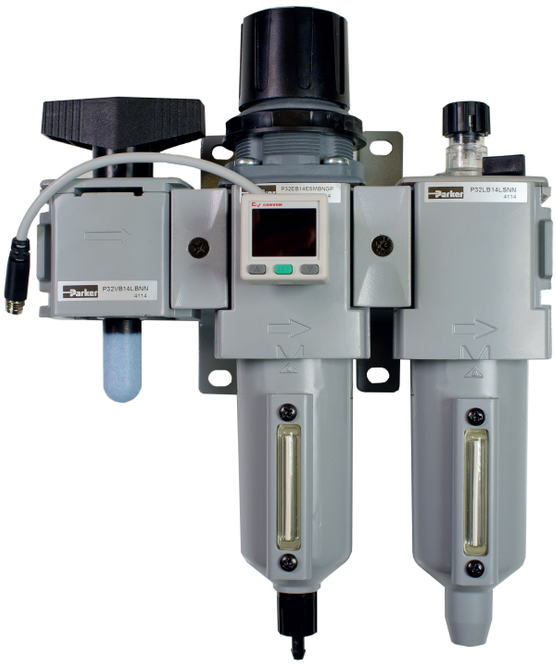

Redundant Safety Exhaust Valve

P33T Schematic

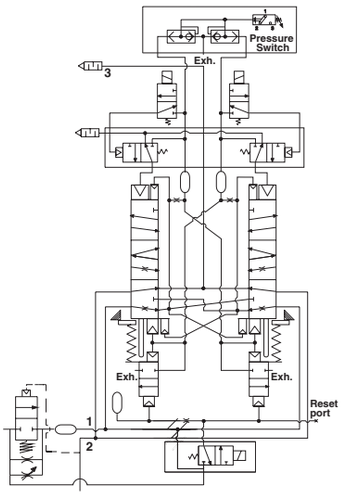

Symbol

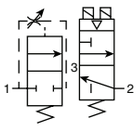

- Proven control reliable technology with integrated soft start
- Soft start application of air to the system when energized; can be adjusted for slower or faster buildup of system pressure
- Rapid exhaust of downstream air when de-energized to remove stored energy and allow safe access
- Memory, monitoring, and air flow control functions are integrated into two identical valve elements. Valves lock-out if asynchronous movement of valve elements occurs during actuation or de-actuation, resulting in a residual outlet pressure of less than 1% of supply.
- Reset can only be accomplished by the integrated electrical (solenoid) reset. Cannot be reset by removing and re-applying supply pressure.
- Basic 3/2 normally closed valve function: Dirt tolerant, wear compensating poppet design for quick response and high flow capacity.
- LED indicators of main solenoid operation, reset solenoid operation, and status indicator condition.
- Optional transducer for monitoring of downstream pressure in the system.
- Dual exhaust silencers included.
- Not for use with clutch / brake applications.
- For use in conjunction with a safety relay or safety PLC.

Options:

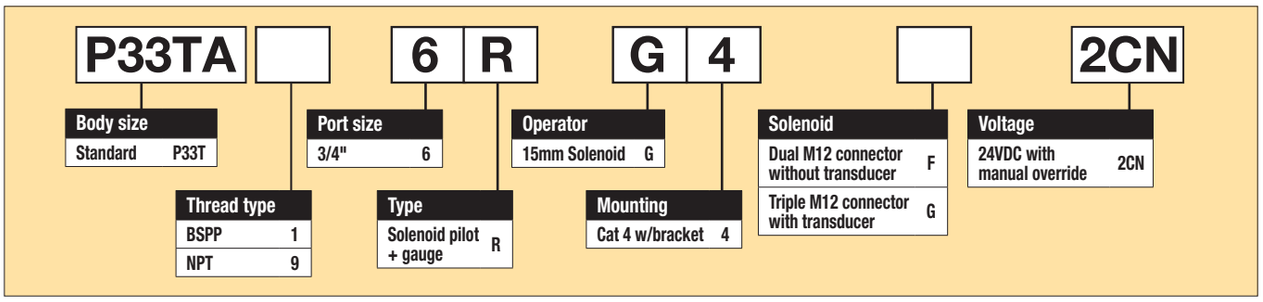

Port size			Cv		Height	Width	Depth	Weight	
Inlet	Outlet	Transducer	1 to 2	2 to 3	mm (inches)	mm (inches)	mm (inches)	kg (lb)	Part number*
3/4	3/4	w/o transducer	3.7	8.5	273.8 (10.78)	136.0 (5.35)	147.6 (581)	7.3 (16.1)	**P33TA16RG4F2CN**
3/4	3/4	w/ transducer	3.7	8.5	273.8 (10.78)	136.0 (5.35)	147.6 (581)	7.4 (16.3)	**P33TA16RG4G2CN**

* BSPP port threads. For NPT threads, replace "1" in the part number with a "9".

Technical Information

Pilot Solenoids:	According to VDE 0580
Enclosure rating:	According to DIN 400 50 IP65
Connector socket:	According to DIN 43650 Form A
	Three solenoids, rated for continuous duty
Standard voltages:	24VDC
Power consumption (each solenoid): for primary and reset solenoids:	1.2 Watts on DC
Enclosure rating:	IP65, IEC 60529
Electrical connection:	M12, 5-pin
Ambient temperature:	15°F to 122°F (-10°C to 50°C)
Media temperature:	40°F to 175°F (4°C to 80°C)
Flow media:	Compressed Air, Filtered to Minimum 40 Micron
Inlet pressure:	30 to 150 PSIG (2 to 10 bar)
Pressure switch rating (Status indicator):	5 Amps at 30 Volts DC.
Monitoring:	Dynamically, cyclically, internally during each actuating and de-actuating movement. Monitoring function has memory and requires an overt act to reset unit after lockout.
Mounting orientation:	Vertically with pilot solenoids on top
Port threads:	3/4 NPT, 3/4 BSPP
Control reliable:	Category 4 (Cat 4); performance Level e (PLe) in accordance with Machine directive - EN ISO 13849-1 (Certification pending)

Repair and Service Kits

Description	Part number
Black grill	1834C05-001
Body connector	P32KA00CB
Cables	
M12, 5-pin female to flying lead cable, TPE; 2 m (6.6 ft)	RKC 4.5-2/S1587
M12, 5-pin male to flying lead cable, TPE; 2 m (6.6 ft)	RSC 4.5-2/S1587
Port block kit	
1/2 NPT	P32KA94CP
3/4 NPT	P32KA96CP
1/2 BSPP	P32KA14CP
3/4 BSPP	P32KA16CP
Pressure switch	1227A30-001
Pressure transducer (Optional)	1232H30-001
T-bracket w/ body connector	P32KA00MT
T-bracket (Fits to body connector or port block)	P32KA00MB
Silencer(s) 3/4"	5500A5013
Solenoid (Main & reset)	1527B7916-001
Square flush mounting gauge kit, 0-160 psig	K4511SCR160

Valve Wiring

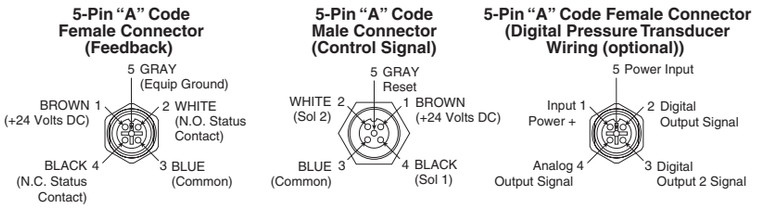

Dimensions mm (inches)

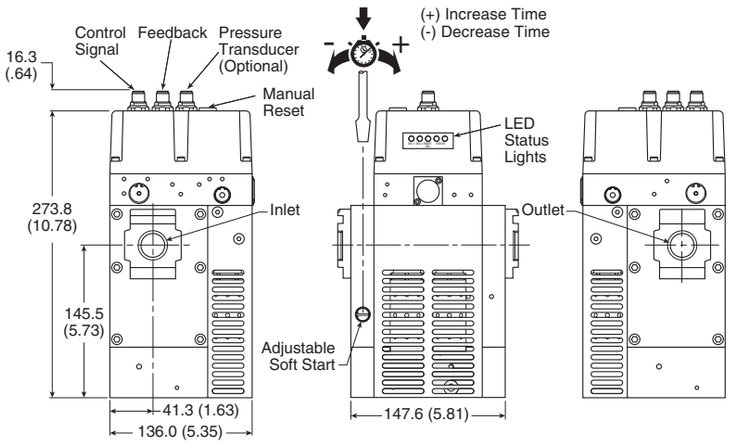

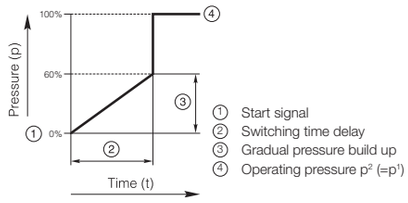

Angle Mounting Bracket

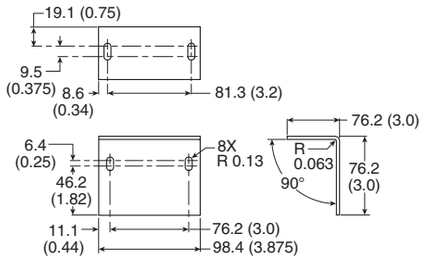

Note: Mounting bracket and installation screws included and required to install unit in the system.

Valve de-actuated (ready-to-run):

The flow of inlet air pressure to the inlet chamber of the main valve internals is restricted by a fixed orifice and an adjustable flow control as well as an air piloted 2-way normally closed poppet valve. The flow of inlet air pressure into the crossover passages is restricted by the size of the passage between the stem and the valve body opening. Flow is sufficient to quickly pressurize pilot supply / timing chambers 1 and 2. The inlet poppets prevent air flow from crossover passages into the outlet chamber. Air pressure acting on the inlet poppets and return pistons securely hold the valve elements in the closed position. (Reset adapter omitted for clarity.)

The green “Status” LED will be illuminated indicating the valve is operational.

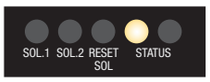

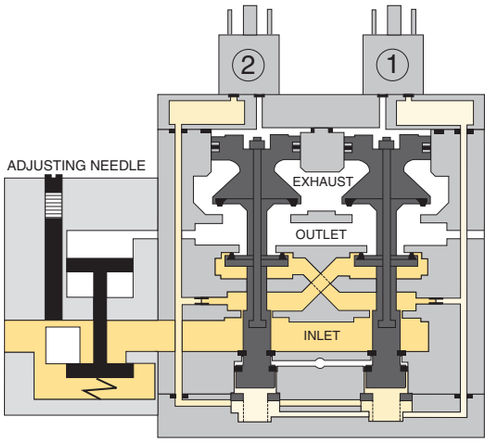

Valve actuated:

Energizing the pilot valves simultaneously applies pressure to both pistons, forcing the internal parts to move to their actuated (open) position, where inlet air flow to crossover passages is fully open, inlet poppets are fully open and exhaust poppets are fully closed. The outlet is then pressurized at a rate allowed by the fixed orifice and the adjusted flow control. Once the air pressure in the outlet chamber reaches approximately 60% of inlet pressure, the air piloted 2-way normally closed poppet valve opens fully and the pressure in the inlet, crossovers, outlet, and timing chambers are quickly equalized. The adjustable flow control will control the time it takes for the outlet air pressure to reach approximately 60% of inlet pressure.

De-energizing the pilots quickly causes the valve elements to return to the ready-to-run position.

Solenoid 1, Solenoid 2 and the green “Status” LED’s will be illuminated indicating the valve is operating properly.

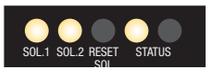

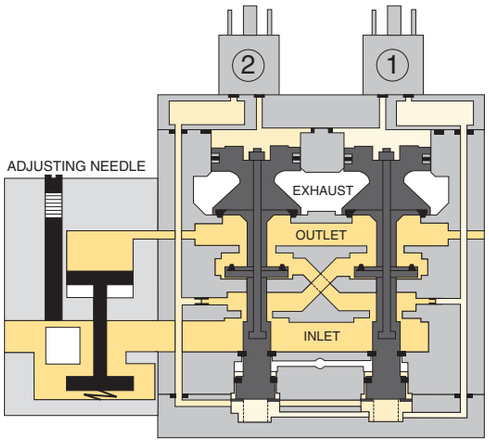

Soft start function:

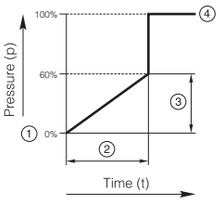

1. Start signal
2. Switching time delay
3. Gradual pressure build up
4. Operating pressure p^2 (=p^1)

Valve fault and lock-out:

Whenever the valve elements operate in a sufficiently asynchronous manner, either on actuation or de-actuation, the valve will move to a locked-out position. In the locked-out position, one crossover and its related timing chamber will be exhausted, and the other crossover and its related timing chamber will be fully pressurized. The valve element (side 2) that is partially actuated has pilot air available to fully actuate it, but no air pressure on the return piston to fully de-actuate the valve element.

Air pressure in the crossover acts on the differential of side 2 stem diameters creating a latching force. Side 1 is in a fully closed position, and has no pilot air available to actuate, but has full pressure on the inlet poppet and return piston to hold the element in the fully closed position. Inlet air flow on side 1 into its crossover is restricted, and flows through the open inlet poppet on side 2, through the outlet into the exhaust port, and from the exhaust port to atmosphere. Residual pressure in the outlet is less than 1% of inlet pressure. The return springs are limited in travel, and can only return the valve elements to the intermediate (locked-out) position. Sufficient air pressure acting on the return pistons is needed to return the valve elements to a fully closed position.

The red “Status” LED will be illuminated indicating the valve in fault and lock-out must be reset

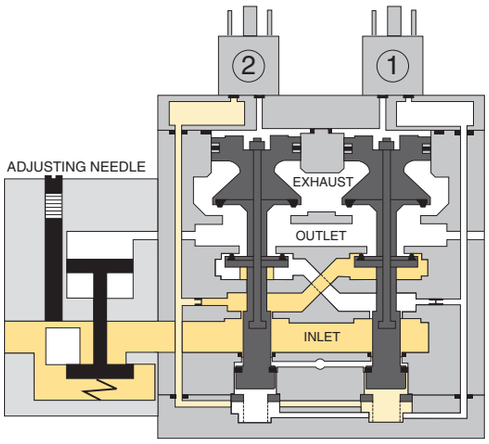

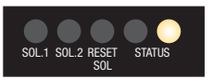

Valve reset (electrical or manual):

The reset procedure is as follows:

- Remove the electrical signals to the main coils
- Ensure there is air supplied to the valve
- Energize the reset solenoid for a minimum of 200 ms
- Allow a 200 ms delay after de-energizing the reset solenoid and re-energizing the main solenoids

The valve will remain in the locked-out position, even if the inlet air supply is removed and re-applied.

A remote reset signal must be applied to reset the valve. A momentary, remote electrical signal must be applied to the reset solenoid to apply pressure to the reset pistons in the valve. Actuation of the reset piston physically pushes the main valve elements to their closed position. Inlet air fully pressurizes the crossovers and holds the inlet poppets on seat. Actuation of the reset piston opens the reset poppet, thereby, immediately exhausting pilot supply air, thus, preventing valve operation during reset (Reset adapter added to illustration.). De-actuation of reset pistons causes the reset poppets to close and pilot supply to fully pressurize. Reset air pressure is applied by a 3/2 normally closed solenoid, or a manual push button mounted on the reset adapter in the top valve cover.

The green “Status” LED will be illuminated once the valve is reset.

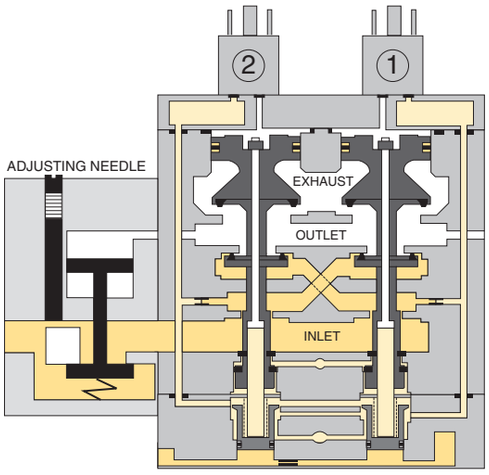

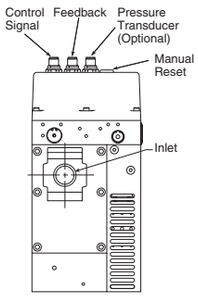

Ball Valve / Lockout Valve

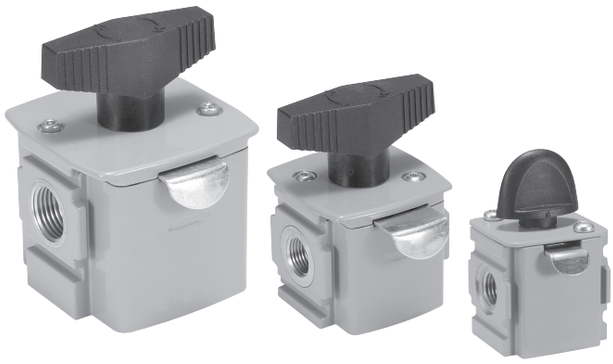

Symbol

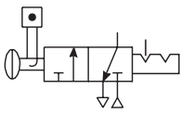

Features

The Ball / Lockout Valve shuts off downstream line pressure in the closed position with a 90°turn of the handle. In the closed position, inlet air pressure is blocked and downstream / system air is exhausted through a threaded port. To prevent unauthorized adjustment, the padlock slide may be assembled on either side. It is recommended that this slide is installed after final system assembly.

Note: This padlock slide is a permanent assembly and may not be removed later, any unauthorized tampering will void any warranty claims. The valve can only be locked in the closed position.

Ordering Information

Model type	Port size	Exhaust port	Thread type	Flow dm^3/s (scfm)	Modular ball valve flow from left to right
P31	1/4"	1/4"	BSPP	20 (42.4)	**P31VB12LBNN**
P32	3/8"	1/4"	BSPP	90 (190.7)	**P32VB13LBNN**
	1/2"	1/4"	BSPP	122 (258.5)	**P32VB14LBNN**
P33	1/2"	1/2"	BSPP	265 (561.5)	**P33VB14LBNN**
	3/4"	1/2"	BSPP	320 (678)	**P33VB16LBNN**

For thread type: NPT **9**

Specifications

Operating temperature		-40°C to 80°C (-40°F to 176°F)
Max. supply pressure		17 bar (250 psig)
Port size	BSPP / NPT	1/4, 3/8, 1/2, 3/4
Weight	**P31:**	0.15 kg (0.33 lbs)
	P32:	0.36 kg (0.79 lbs)
	P33:	0.55 kg (1.21 lbs)

Material Specifications

Body		Aluminum
Seals		PTFE
Ball	**P31**	Stainless Steel
	P32 / **P33**	Stainless Steel

Dimensions mm (inches)

P31

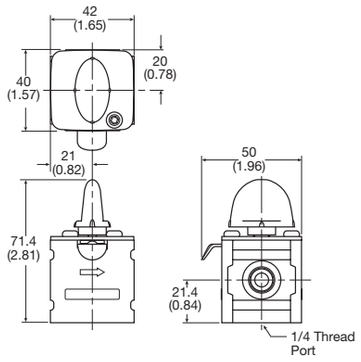

P32

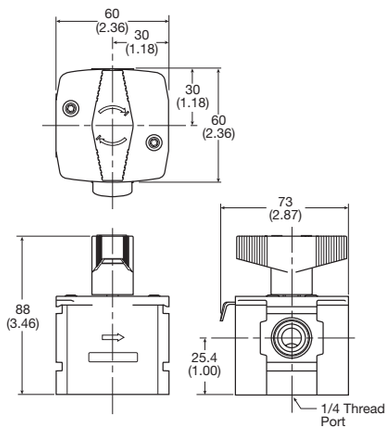

P33

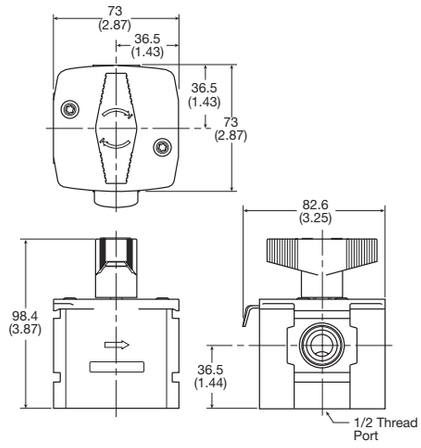

Manifold Blocks

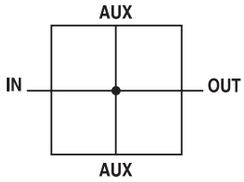

Features

- Available in 1/4, 1/2 & 3/4 threaded inlet / outlet ports
- Two additional top and bottom auxiliary ports standard
- Can be mounted anywhere in the FRL system

Manifold Blocks

Model Type	In / Out Port Size	Auxiliary Port Size Top	Auxilliary Port Size Bottom	Thread Type	Order Code
P31	1/4"	1/4"	1/4"	BSPP	**P31MA12022N**
P32	1/2"	1/4"	1/2"	BSPP	**P32MA14024N**
P33	3/4"	1/4"	1/2"	BSPP	**P33MA16024N**

For thread type: BSPP **1** NPT **9**

Branch Manifold

P32	1/2"	1/4"	1/4"	BSPP	**P32MD14022N**
P32	1/4"	1/4"	1/4"	BSPP	**P32MD12022N**

Materials of Construction

Body	Aluminium

Specifications

Max Operating Temperature		65.5°C (150°F)
Max Supply Pressure		20.7 bar (300 psi)
Weight	**P31:**	0.19 kg (0.42 lbs)
	P32:	0.30 kg (0.66 lbs)
	P32MD:	0.14 kg (0.31 lbs)
	P33:	0.34 kg (0.75 lbs)

Branch Manifold Dimensions - P32

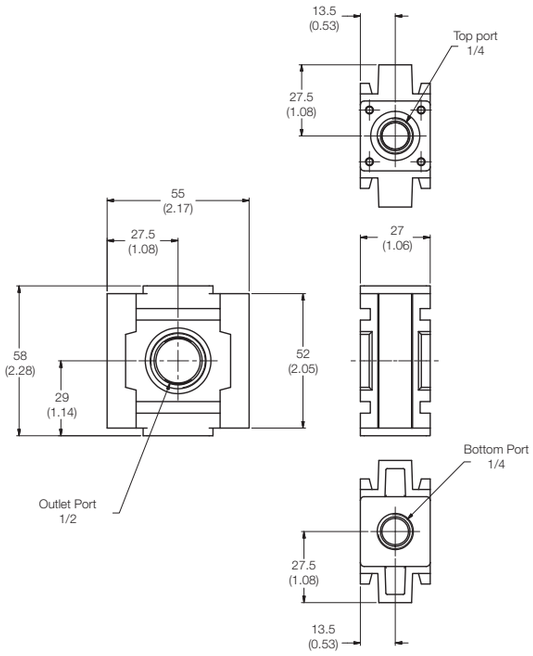

Manifold Block - Dimensions

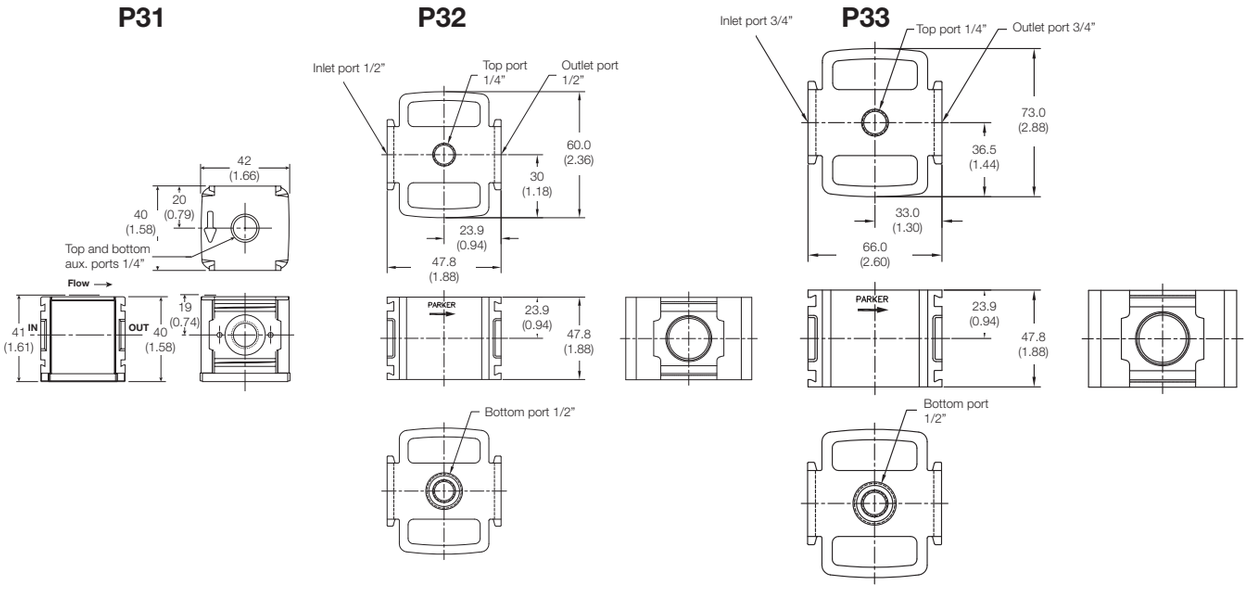

Pressure Sensors
MPS-34, 2-Colour Panel Mount

- Sensor output:
  PNP Open collector
  Transistor output, 30VDC, 125mA with Analog output, 4 to 20mA
- Output response time less than 2.0 milliseconds
- RoHS
- Air and non-corrosive gases
- Sensor face includes icons to show sensor programming status

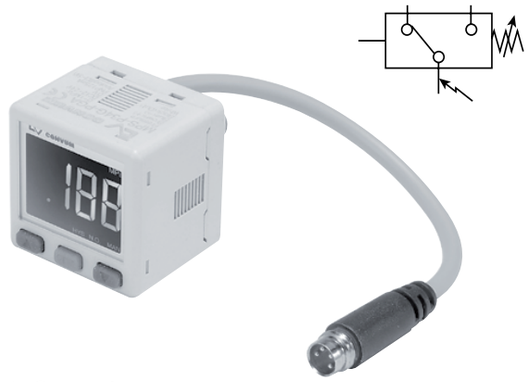

Red ⟷ Green Display

Programming options

Outputs change N.O. / N.C.	✔
Units of measure change	✔
Hysteresis mode	✔
Window comparator mode	✔
Auto teach mode	✔
Output response time	✔
Lockout option	✔
Password lockout	–
Max. value display	✔
Min. value display	✔
Zero reset	✔
Red / Green LED display options	✔
Error output mode	✔

MPS-34 Sensor Only Ordering Numbers

			Order code	
Pressure range	Electrical output	Electrical connection	1/8 NPSF male	1/8 BSPP male
0-30 inHg	(1) PNP with (1) 4-20ma	M8, 4 Pin	**MPS-V34N-PCI**	**MPS-V34G-PCI**
0-145 PSI	(1) PNP with (1) 4-20ma	M8, 4 Pin	**MPS-P34N-PCI**	**MPS-P34G-PCI**

MPS-34 Accessories

Description	Order code
M8, 4-pin, 2 meter cable	**CB-M8-4P-2M-PUR**
M8, 4-pin, 5 meter cable	**CB-M8-4P-5M-PUR**

Internal circuit for open collector and analog output wiring

PNP Output (Analog (4-20mA)

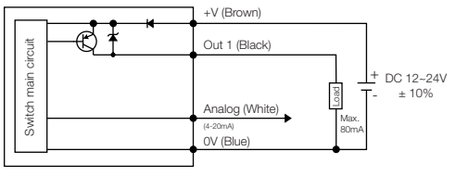

Sensor pin out with analog output

Pin #

1 Brown: 24VDC
2 White: 4 to 20mA
3 Blue: 0VDC
4 Black: PNP Open Collector Output 1

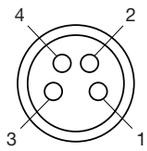

Specifications

	Vacuum (V)	Positive (P)
Pressure range	-101.3 to 0 kPa (-14.5 to 0 PSI)	-0.1 to 1 Mpa (0 to 145 PSI)
Proof pressure	0.3 Mpa (44PSI)	1.5 Mpa (218 PSI)
Display resolution, Units of measure	0.1, kPa 0.001, kgf/cm2 0.001, bar 0.01, PSI 0.01, inHg 1, mmHg	1, kPa 0.01, kgf/cm² 0.01, bar 0.1, PSI - -
Media	Air & non-corrosive gases	
Pressure port	(N) 1/8" NPT male, (G) 1/8 BSPP male both with M5 female port	
Operating temperature	32 to 122°F (0 to 50°C)	
Storage temperature	-4 to 140°F (-20 to 60°C)	
Humidity	35 to 85% RH (no condensation)	
Electrical connection	(C) 4-pin, M8 connector on 150mm lead wire	
Power supply	12 to 24VDC ±10%, Ripple (P-P) 10% or less	
Display	3 + 1/2 digit, 2 color, 7-segment RED / GREEN LED	
Display refresh	Timing update : 0.1 ~ 3 sec. (Factory Set Unit: 0.1 sec.)	

Switch output	Output signal, PNP, Normally open or closed, LED indicator, 125 mA max. output load
Output modes	Hysteresis or Window Comparator
Response time	≤ 2.5ms (chattering-proof function: 24ms, 250ms, 500ms, 1000ms and 1500ms selections)
Repeatability	± 0.2% of F.S. ± 1 digit
Output current	Output current 4 to 20mA; Linearity ±1.0% of F.S.; Maximum load impedance 300Ω at power supply of 12V; 600Ω at power supply of 12V; Minimum load impedance 50Ω
Thermal error	32 to 122°F (0 to 50°C) 25°C (77°C) + 2% of F.S. or less at range of 32 to 122°F (0 to 50°C)
General protection	IP40, CE marked, EMC-EN61000-6-2: 2001
Current consumption	45mA (with no load)
Vibration resistance	10 to 150Hz, Double amplitude 1.5mm, XYZ, 2 hrs.
Shock resistance	980 m/s² (about 10G), 3 times/each directions X, Y, Z
Noise Resistance	Vp-p400V, 10 ms, 0.5μs noise simulator
Material	Housing: ABS (gray) , Pressure port: Zinc die-cast, Diaphragm: Silicon
Mass	1.45 oz. (45g) with M8 connector

Dimensions

1/8" Male

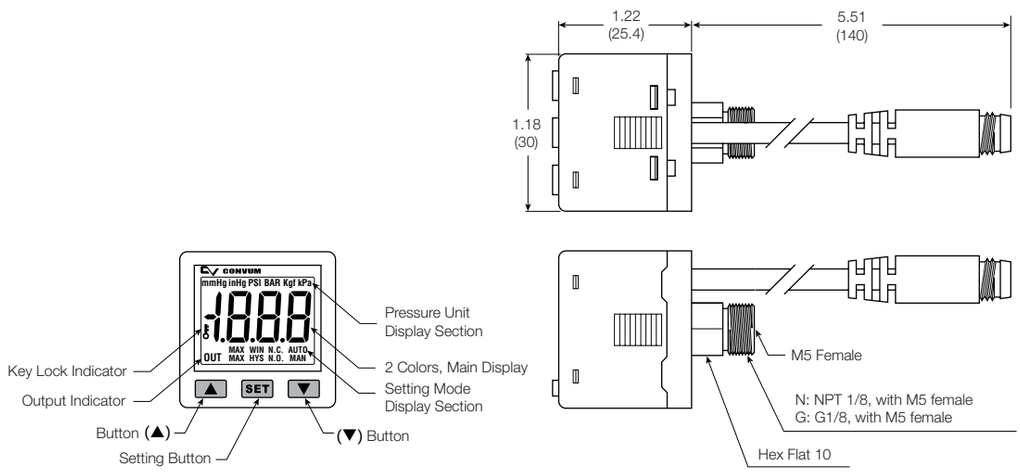

Accessories - P31 Series

C-Bracket
(Fits to filter and lubricator body)

P31KA00MW

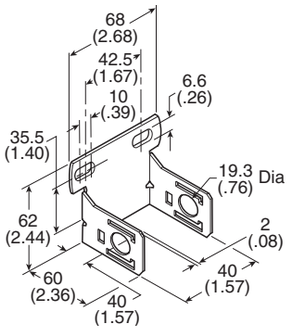

T-Bracket w/ Body Connector
(O-ring not shown)

P31KA00MT

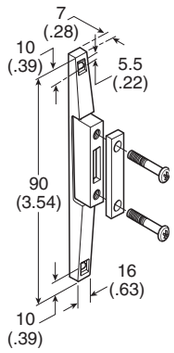

Body Connector
(O-ring not shown)

P31KA00CB

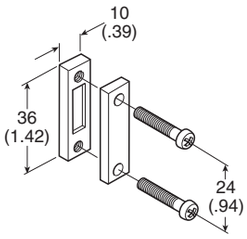

Port Block Kit
(O-ring not shown)

1/8 NPT **P31KA91CP**
1/4 NPT **P31KA92CP**
3/8 NPT **P31KA93CP**
1/8 BSPP **P31KA11CP**
1/4 BSPP **P31KA12CP**
3/8 BSPP **P31KA13CP**

Port Block Kit w/ T-Bracket
(O-ring not shown)

1/8 NPT **P31KA91CN**
1/4 NPT **P31KA92CN**
3/8 NPT **P31KA93CN**
1/8 BSPP **P31KA11CN**
1/4 BSPP **P31KA12CN**
3/8 BSPP **P31KA13CN**

Angle Bracket
(Fits to regulator and filter/regulator body)

P31KB00MR

P31KB00MS - with Metal Nut

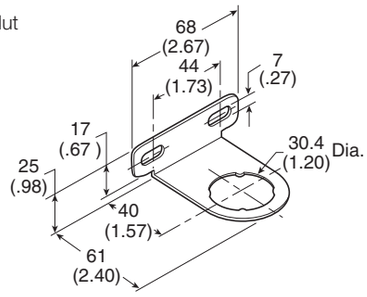

Accessories - P32 Series

T-Bracket w/ Body Connector

P32KA00MT

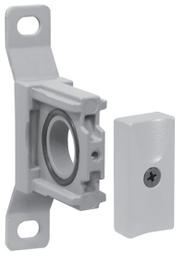

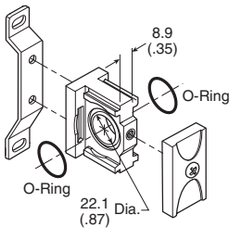

Body Connector

P32KA00CB

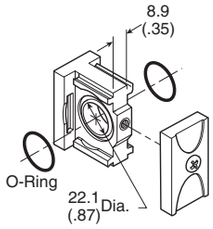

Port Block Kit

1/4 NPT..... **P32KA92CP**
3/8 NPT..... **P32KA93CP**
1/2 NPT..... **P32KA94CP**
3/4 NPT..... **P32KA96CP**
1/4 BSPP **P32KA12CP**
3/8 BSPP **P32KA13CP**
1/2 BSPP **P32KA14CP**
3/4 BSPP **P32KA16CP**

Angle Bracket

(Fits to regulator and filter/regulator bonnet)

P32KB00MR

P32KB00MS - with Metal Nut

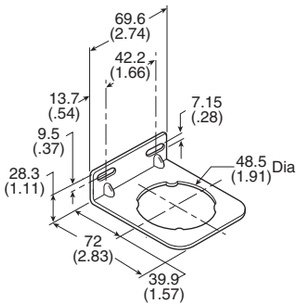

L-Bracket

(Fits to filter and lubricator body)

P32KA00ML

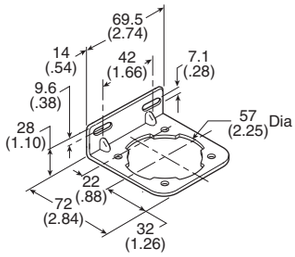

T-Bracket

(fits to body connector or port block)

P32KA00MB

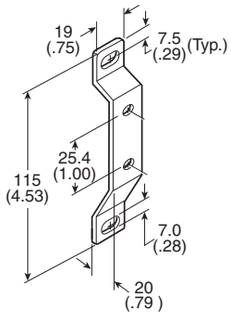

Accessories - P33 Series

T-Bracket w/ Body Connector

P32KA00MT

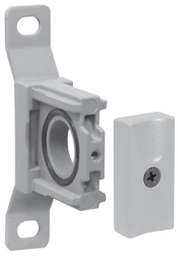

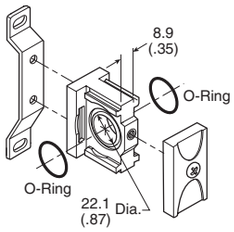

Body Connector

P32KA00CB

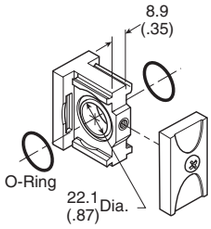

Port Block Kit

1/4 NPT..... **P32KA92CP**
3/8 NPT..... **P32KA93CP**
1/2 NPT..... **P32KA94CP**
3/4 NPT..... **P32KA96CP**
1/4 BSPP **P32KA12CP**
3/8 BSPP **P32KA13CP**
1/2 BSPP **P32KA14CP**
3/4 BSPP **P32KA16CP**

Angle Bracket

(Fits to regulator and filter/regulator bonnet)

P33KA00MR

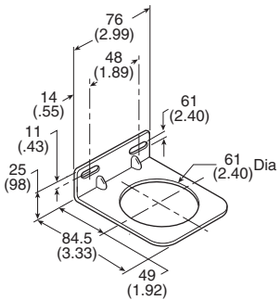

L-Bracket

(Fits to filter and lubricator body)

P33KA00ML

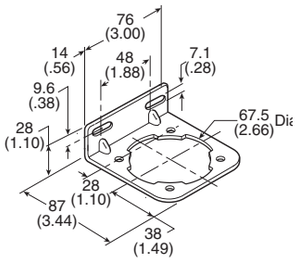

T-Bracket

(fits to body connector or port block)

P32KA00MB

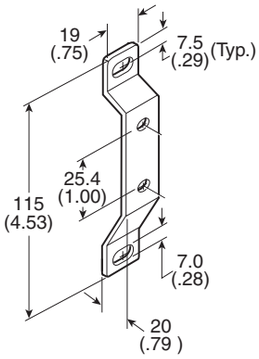

Series	Description	Part number	
P31 P32 P33	Panel Mount Nut (Plastic)	**P31KA00MP** **P32KA00MP** **P33KA00MP**	
P31 P32 P33	Panel Mount Nut (Aluminum)	**P31KA00MM** **P32KA00MM** **P33KA00MM**	
P31 P32 P33	5µ Element Kit	**P31KA00ESE** **P32KA00ESE** **P33KA00ESE**	
P31 P32 P33	1µ Element Kit	**P31KA00ES9** **P32KA00ES9** **P33KA00ES9**	
P31 P32 P33	0.01µ Element Kit	**P31KA00ESC** **P32KA00ESC** **P33KA00ESC**	
P31 P32 P33	Adsorber Element Kit	**P31KA00ESA** **P32KA00ESA** **P33KA00ESA**	
P32 / P33	Auto Drain Kit	**P32KA00DA**	
P31 P32 / P33	Differential Pressure Indicator Kit	**P31KB00RQ** **P32KA00RQ**	
P31 / P32 / P33	Drip Control Assembly Kit	**P32KA00PH**	
P31 P32 / P33	Fill Plug Kit	**P31KB00RQ** **P32KA00PL**	
P31 P32 P33	Lubricator - Plastic Bowl w/ Bowl Guard No Drain	**P31KB00BGN** **P32KB00BGN** **P33KA00BGN**	

Series	Description	Part number	
P31 P32 P33	Lubricator - Metal Bowl w/o Sight Gauge No Drain	**P31KB00BMN** **P32KB00BMN** **P33KA00BMN**	
P32 P33	Lubricator - Metal Bowl w/ Sight Gauge No Drain	**P32KB00BSN** **P33KA00BSN**	
P31 P32 P33	Metal Bowl w/o Sight Gauge & Manual Drain	**P31KB00BMM** **P32KB00BMM** **P33KA00BMM**	
P31	Metal Bowl w/o Sight Gauge & Pulse Drain	**P31KB00BMB**	
P32 P33	Metal Bowl w/o Sight Gauge & Auto Drain	**P32KB00BMA** **P33KA00BMA**	
P32 P33	Metal Bowl w/ Sight Gauge & Manual Drain	**P32KB00BSM** **P33KA00BSM**	
P32 P33	Metal Bowl w/ Sight Gauge & Auto Drain	**P32KB00BSA** **P33KA00BSA**	
P31 P32 P33	Plastic Bowl w/ Bowl Guard & Manual Drain	**P31KB00BGM** **P32KB00BGM** **P33KA00BGM**	
P31	Plastic Bowl w/ Bowl Guard & Pulse Drain	**P31KB00BGB**	
P32 P33	Plastic Bowl w/ Bowl Guard & Auto Drain	**P32KB00BGA** **P33KA00BGA**	

Series	Description	Connection		Part number	
P31	Square Flush Mounting Gauge Kit	0-4 bar 0-11 bar 0-60 psig 0-160 psig		**K4511SCR04B** **K4511SCR11B** **K4511SCR060** **K4511SCR160**	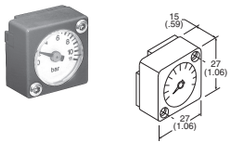
P31	Square Mounting Gauge with Adapter Kit	0-4 bar 0-11 bar 0-60 psig 0-160 psig		**P6G-PR11040** **P6G-PR11110** **P6G-PR90060** **P6G-PR90160**	
P31	40mm Round Gauge	0-30 psig / 0-2 bar 0-60 psig / 0-4.1 bar 0-160 psig / 0-10 bar	1/8" 1/8" 1/8"	**P3D-KAB1AYN** **P3D-KAB1ALN** **P3D-KAB1ANN**	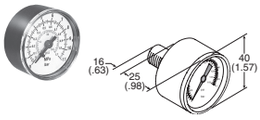
P32 / P33	40mm Round Gauge	0-60 psig / 0-4.1 bar 0-160 psig / 0-10 bar 0-300 psig / 0-20 bar	1/4" 1/4" 1/4"	**P6G-ERB2040** **P6G-ERB2110** **P6G-ERB2200**	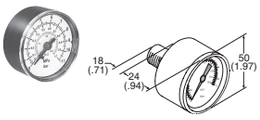
P31 P32 / P33	Body Connector O-ring (Replacement kit) (Pack of 10)			**P31KA00CY** **P32KA00CY**	
P31 P32	Tamperproof Knob Kit			**P31KB00AT** **P32KB00AT**	
P31 P32	Tamperproof Lockable Kit			**P31KB00AL** **P32KB00AL**	

Plugs to DIN EN 175301-803, Form A, ISO 4400

Standard version

Version with LEDs

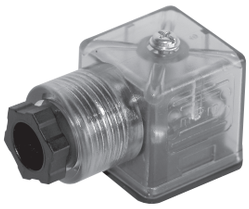

Plugs to DIN EN 175301-803, Form A, ISO 4400

Description	Type	**Order code**
Standard version	GSD-30DS	**KL3349**
Version with LEDs 24 V	GSD-30DSL24V	**KL3350**
Version with LEDs 230 V	GSD-30DSL230V	**KL3351**

Pressure Switches G1/8”, G1/4”

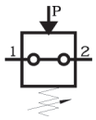

Break contact

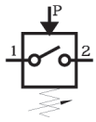

Make contact

Characteristics

Safety pressure relief P_{max}	300 bar
Port size	G1/8, G1/4
Medium and ambient T_{max} temperature range	+100 °C
Switch back difference	Max. 5 - 15%
Voltage	Max. 48 V
Current	0.5 A
Degree of protection	IP 65
Switching frequency	Max. 200 s/min

Material

Housing	Passivated steel
Diaphragm	Buna N

Switching function

Make contact	Closes the circuit when the set pressure is reached
Break contact	Interrupts the circuit when the set pressure is reached

Dimensions and order instructions

Order instructions Type	Port size A	Function	Setting range (bar)	**Order code**
PR / 0.1-1 NC ST 1/4 48	G1/4	Break contact	0.1-1	**KL3439**
PR / 0.1-1 NO ST 1/4 48	G1/4	Make contact	0.1-1	**KL3440**
PR / 1-10 NC ST 1/8 48	G1/8	Break contact	1-10	**KL3437**
PR / 1-10 NC ST 1/4 48	G1/4	Break contact	1-10	**KL3436**
PR / 1-10 NO ST 1/8 48	G1/8	Make contact	1-10	**KL3438**
PR / 1-10 NO ST 1/4 48	G1/4	Make contact	1-10	**KL3435**

Order instructions Type	Port size A	Function	Setting range (bar)	**Order code**
PR / 0.2-1 NO SR 1/4 48	G1/4	Make contact	0.2-1	**KL3445**
PR / 0.1-1 NC SR 1/4 48	G1/4	Break contact	0.1-1	**KL3454**
PR / 0.1-1 NO SR 1/4 48	G1/4	Make contact	0.1-1	**KL3455**
PR / 1-10 NC SR 1/8 48	G1/8	Break contact	1-10	**KL3452**
PR / 1-10 NC SR 1/4 48	G1/4	Break contact	1-10	**KL3451**
PR / 1-10 NO SR 1/8 48	G1/8	Make contact	1-10	**KL3453**
PR / 1-10 NO SR 1/4 48	G1/4	Make contact	1-10	**KL3450**

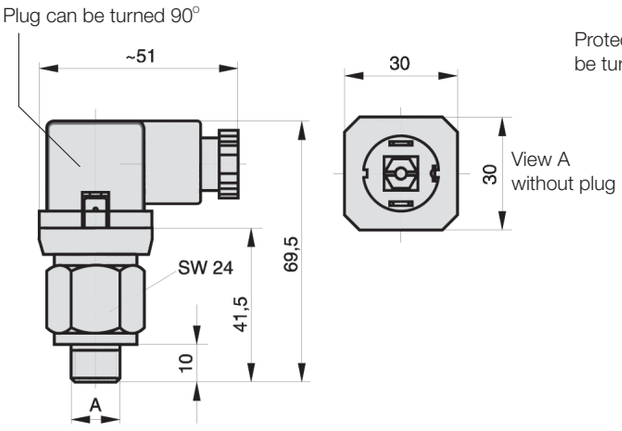

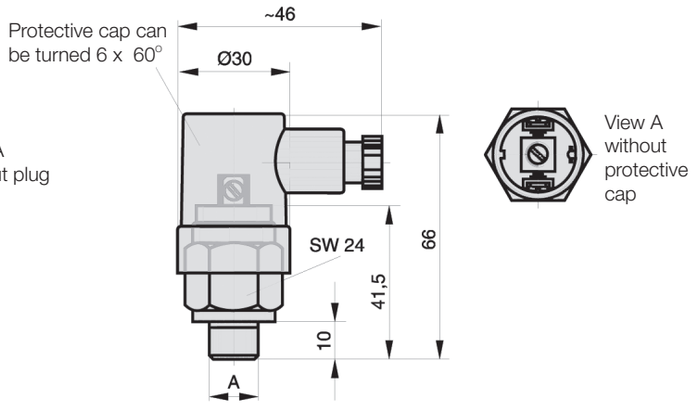

Dimensions in mm

Safety Guide For Selecting And Using Pneumatic Division Products And Related Accessories

⚠ WARNING:

FAILURE OR IMPROPER SELECTION OR IMPROPER USE OF PNEUMATIC DIVISION PRODUCTS, ASSEMBLIES OR RELATED ITEMS ("PRODUCTS") CAN CAUSE DEATH, PERSONAL INJURY, AND PROPERTY DAMAGE. POSSIBLE CONSEQUENCES OF FAILURE OR IMPROPER SELECTION OR IMPROPER USE OF THESE PRODUCTS INCLUDE BUT ARE NOT LIMITED TO:

- Unintended or mistimed cycling or motion of machine members or failure to cycle
- Work pieces or component parts being thrown off at high speeds.
- Failure of a device to function properly for example, failure to clamp or unclamp an associated item or device.
- Explosion
- Suddenly moving or falling objects.
- Release of toxic or otherwise injurious liquids or gasses.

Before selecting or using any of these Products, it is important that you read and follow the instructions below.

1. GENERAL INSTRUCTIONS

1.1. Scope: This safety guide is designed to cover general guidelines on the installation, use, and maintenance of Pneumatic Division Valves, FRLs (Filters, Pressure Regulators, and Lubricators), Vacuum products and related accessory components.

1.2. Fail-Safe: Valves, FRLs, Vacuum products and their related components can and do fail without warning for many reasons. Design all systems and equipment in a fail-safe mode, so that failure of associated valves, FRLs or Vacuum products will not endanger persons or property.

1.3 Relevant International Standards: For a good guide to the application of a broad spectrum of pneumatic fluid power devices see: ISO 4414:1998, Pneumatic Fluid Power – General Rules Relating to Systems. See www.iso.org for ordering information.

1.4. Distribution: Provide a copy of this safety guide to each person that is responsible for selection, installation, or use of Valves, FRLs or Vacuum products. Do not select, or use Parker valves, FRLs or vacuum products without thoroughly reading and understanding this safety guide as well as the specific Parker publications for the products considered or selected.

1.5. User Responsibility: Due to the wide variety of operating conditions and applications for valves, FRLs, and vacuum products Parker and its distributors do not represent or warrant that any particular valve, FRL or vacuum product is suitable for any specific end use system. This safety guide does not analyze all technical parameters that must be considered in selecting a product. The user, through its own analysis and testing, is solely responsible for:

- Making the final selection of the appropriate valve, FRL, Vacuum component, or accessory.
- Assuring that all user's performance, endurance, maintenance, safety, and warning requirements are met and that the application presents no health or safety hazards.
- Complying with all existing warning labels and / or providing all appropriate health and safety warnings on the equipment on which the valves, FRLs or Vacuum products are used; and,
- Assuring compliance with all applicable government and industry standards.

1.6. Safety Devices: Safety devices should not be removed, or defeated.

1.7. Warning Labels: Warning labels should not be removed, painted over or otherwise obscured.

1.8. Additional Questions: Call the appropriate Parker technical service department if you have any questions or require any additional information. See the Parker publication for the product being considered or used, or call 1-800-CPARKER, or go to www.parker.com, for telephone numbers of the appropriate technical service department.

2. PRODUCT SELECTION INSTRUCTIONS

2.1. Flow Rate: The flow rate requirements of a system are frequently the primary consideration when designing any pneumatic system. System components need to be able to provide adequate flow and pressure for the desired application.

2.2. Pressure Rating: Never exceed the rated pressure of a product. Consult product labeling, Pneumatic Division catalogs or the instruction sheets supplied for Maximum pressure ratings.

2.3. Temperature Rating: Never exceed the temperature rating of a product. Excessive heat can shorten the life expectancy of a product and result in complete product failure.

2.4. Environment: Many environmental conditions can affect the integrity and suitability of a product for a given application. Pneumatic Division products are designed for use in general purpose industrial applications. If these products are to be used in unusual circumstances such as direct sunlight and/or corrosive or caustic environments, such use can shorten the useful life and lead to premature failure of a product.

2.5. Lubrication and Compressor Carryover: Some modern synthetic oils can and will attack nitrile seals. If there is any possibility of synthetic oils or greases migrating into the pneumatic components check for compatibility with the seal materials used. Consult the factory or product literature for materials of construction.

2.6. Polycarbonate Bowls and Sight Gauges: To avoid potential polycarbonate bowl failures:

- Do not locate polycarbonate bowls or sight gauges in areas where they could be subject to direct sunlight, impact blow, or temperatures outside of the rated range.
- Do not expose or clean polycarbonate bowls with detergents, chlorinated hydro-carbons, ketones, esters or certain alcohols.
- Do not use polycarbonate bowls or sight gauges in air systems where compressors are lubricated with fire resistant fluids such as phosphate ester and di-ester lubricants.

2.7. Chemical Compatibility: For more information on plastic component chemical compatibility see Pneumatic Division technical bulletins Tec-3, Tec-4, and Tec-5

2.8. Product Rupture: Product rupture can cause death, serious personal injury, and property damage.
- Do not connect pressure regulators or other Pneumatic Division products to bottled gas cylinders.
- Do not exceed the Maximum primary pressure rating of any pressure regulator or any system component.
- Consult product labeling or product literature for pressure rating limitations.

3. PRODUCT ASSEMBLY AND INSTALLATION INSTRUCTIONS

3.1. Component Inspection: Prior to assembly or installation a careful examination of the valves, FRLs or vacuum products must be performed. All components must be checked for correct style, size, and catalog number. DO NOT use any component that displays any signs of nonconformance.

3.2. Installation Instructions: Parker published Installation Instructions must be followed for installation of Parker valves, FRLs and vacuum components. These instructions are provided with every Parker valve or FRL sold, or by calling 1-800-CPARKER, or at www.parker.com.

3.3. Air Supply: The air supply or control medium supplied to Valves, FRLs and Vacuum components must be moisture-free if ambient temperature can drop below freezing

4. VALVE AND FRL MAINTENANCE AND REPLACEMENT INSTRUCTIONS

4.1. Maintenance: Even with proper selection and installation, valve, FRL and vacuum products service life may be significantly reduced without a continuing maintenance program. The severity of the application, risk potential from a component failure, and experience with any known failures in the application or in similar applications should determine the frequency of inspections and the servicing or replacement of Pneumatic Division products so that products are replaced before any failure occurs. A maintenance program must be established and followed by the user and, at Minimum, must include instructions 4.2 through 4.10.

4.2. Installation and Service Instructions: Before attempting to service or replace any worn or damaged parts consult the appropriate Service Bulletin for the valve or FRL in question for the appropriate practices to service the unit in question. These Service and Installation Instructions are provided with every Parker valve and FRL sold, or are available by calling 1-800-CPARKER, or by accessing the Parker web site at www.parker.com.

4.3. Lockout / Tagout Procedures: Be sure to follow all required lockout and tagout procedures when servicing equipment. For more information see: OSHA Standard – 29 CFR, Part 1910.147, Appendix A, The Control of Hazardous Energy – (Lockout / Tagout)

4.4. Visual Inspection: Any of the following conditions requires immediate system shut down and replacement of worn or damaged components:
- Air leakage: Look and listen to see if there are any signs of visual damage to any of the components in the system. Leakage is an indication of worn or damaged components.
- Damaged or degraded components: Look to see if there are any visible signs of wear or component degradation.
- Kinked, crushed, or damaged hoses. Kinked hoses can result in restricted air flow and lead to unpredictable system behavior.
- Any observed improper system or component function: Immediately shut down the system and correct malfunction.
- Excessive dirt build-up: Dirt and clutter can mask potentially hazardous situations.

Caution: Leak detection solutions should be rinsed off after use.

4.5. Routine Maintenance Issues:
- Remove excessive dirt, grime and clutter from work areas.
- Make sure all required guards and shields are in place.

4.6. Functional Test: Before initiating automatic operation, operate the system manually to make sure all required functions operate properly and safely.

4.7. Service or Replacement Intervals: It is the user's responsibility to establish appropriate service intervals. Valves, FRLs and vacuum products contain components that age, harden, wear, and otherwise deteriorate over time. Environmental conditions can significantly accelerate this process. Valves, FRLs and vacuum components need to be serviced or replaced on routine intervals. Service intervals need to be established based on:
- Previous performance experiences.
- Government and / or industrial standards.
- When failures could result in unacceptable down time, equipment damage or personal injury risk.

4.8. Servicing or Replacing of any Worn or Damaged Parts: To avoid unpredictable system behavior that can cause death, personal injury and property damage:
- Follow all government, state and local safety and servicing practices prior to service including but not limited to all OSHA Lockout Tagout procedures (OSHA Standard – 29 CFR, Part 1910.147, Appendix A, The Control of Hazardous Energy – Lockout / Tagout).
- Disconnect electrical supply (when necessary) before installation, servicing, or conversion.
- Disconnect air supply and depressurize all air lines connected to system and Pneumatic Division products before installation, service, or conversion.
- Installation, servicing, and / or conversion of these products must be performed by knowledgeable personnel who understand how pneumatic products are to be applied.
- After installation, servicing, or conversions air and electrical supplies (when necessary) should be connected and the product tested for proper function and leakage. If audible leakage is present, or if the product does not operate properly, do not put product or system into use.
- Warnings and specifications on the product should not be covered or painted over. If masking is not possible, contact your local representative for replacement labels.

4.9. Putting Serviced System Back into Operation: Follow the guidelines above and all relevant Installation and Maintenance Instructions supplied with the valve FRL or vacuum component to insure proper function of the system.

Parker Worldwide

Europe, Middle East, Africa

AE – United Arab Emirates, Dubai
Tel: +971 4 8127100
parker.me@parker.com

AT – Austria, Wiener Neustadt
Tel: +43 (0)2622 23501-0
parker.austria@parker.com

AT – Eastern Europe, Wiener Neustadt
Tel: +43 (0)2622 23501 900
parker.easteurope@parker.com

AZ – Azerbaijan, Baku
Tel: +994 50 2233 458
parker.azerbaijan@parker.com

BE/LU – Belgium, Nivelles
Tel: +32 (0)67 280 900
parker.belgium@parker.com

BG – Bulgaria, Sofia
Tel: +359 2 980 1344
parker.bulgaria@parker.com

BY – Belarus, Minsk
Tel: +375 17 209 9399
parker.belarus@parker.com

CH – Switzerland, Etoy
Tel: +41 (0)21 821 87 00
parker.switzerland@parker.com

CZ – Czech Republic, Klecany
Tel: +420 284 083 111
parker.czechrepublic@parker.com

DE – Germany, Kaarst
Tel: +49 (0)2131 4016 0
parker.germany@parker.com

DK – Denmark, Ballerup
Tel: +45 43 56 04 00
parker.denmark@parker.com

ES – Spain, Madrid
Tel: +34 902 330 001
parker.spain@parker.com

FI – Finland, Vantaa
Tel: +358 (0)20 753 2500
parker.finland@parker.com

FR – France, Contamine s/Arve
Tel: +33 (0)4 50 25 80 25
parker.france@parker.com

GR – Greece, Athens
Tel: +30 210 933 6450
parker.greece@parker.com

HU – Hungary, Budaörs
Tel: +36 23 885 470
parker.hungary@parker.com

IE – Ireland, Dublin
Tel: +353 (0)1 466 6370
parker.ireland@parker.com

IT – Italy, Corsico (MI)
Tel: +39 02 45 19 21
parker.italy@parker.com

KZ – Kazakhstan, Almaty
Tel: +7 7273 561 000
parker.easteurope@parker.com

NL – The Netherlands, Oldenzaal
Tel: +31 (0)541 585 000
parker.nl@parker.com

NO – Norway, Asker
Tel: +47 66 75 34 00
parker.norway@parker.com

PL – Poland, Warsaw
Tel: +48 (0)22 573 24 00
parker.poland@parker.com

PT – Portugal, Leca da Palmeira
Tel: +351 22 999 7360
parker.portugal@parker.com

RO – Romania, Bucharest
Tel: +40 21 252 1382
parker.romania@parker.com

RU – Russia, Moscow
Tel: +7 495 645-2156
parker.russia@parker.com

SE – Sweden, Spånga
Tel: +46 (0)8 59 79 50 00
parker.sweden@parker.com

SL – Slovenia, Novo Mesto
Tel: +386 7 337 6650
parker.slovenia@parker.com

TR – Turkey, Istanbul
Tel: +90 216 4997081
parker.turkey@parker.com

UA – Ukraine, Kiev
Tel: +380 44 494 2731
parker.poland@parker.com

UK – United Kingdom, Warwick
Tel: +44 (0)1926 317 878
parker.uk@parker.com

ZA – South Africa, Kempton Park
Tel: +27 (0)11 961 0700
parker.southafrica@parker.com

North America

CA – Canada, Milton, Ontario
Tel: +1 905 693 3000

US – USA, Cleveland
Tel: +1 216 896 3000

Asia Pacific

AU – Australia, Castle Hill
Tel: +61 (0)2-9634 7777

CN – China, Shanghai
Tel: +86 21 2899 5000

HK – Hong Kong
Tel: +852 2428 8008

IN – India, Mumbai
Tel: +91 22 6513 7081-85

JP – Japan, Tokyo
Tel: +81 (0)3 6408 3901

KR – South Korea, Seoul
Tel: +82 2 559 0400

MY – Malaysia, Shah Alam
Tel: +60 3 7849 0800

NZ – New Zealand, Mt Wellington
Tel: +64 9 574 1744

SG – Singapore
Tel: +65 6887 6300

TH – Thailand, Bangkok
Tel: +662 186 7000

TW – Taiwan, Taipei
Tel: +886 2 2298 8987

South America

AR – Argentina, Buenos Aires
Tel: +54 3327 44 4129

BR – Brazil, Sao Jose dos Campos
Tel: +55 12 4009 3500

CL – Chile, Santiago
Tel: +562 2303 9640

MX – Mexico, Toluca
Tel: +52 72 2275 4200

European Product Information Centre
Free phone: 00 800 27 27 5374
(from AT, BE, CH, CZ, DE, DK, EE, ES, FI, FR, IE, IL, IS, IT, LU, MT, NL, NO, PL, PT, RU, SE, SK, UK, ZA)

© 2015 Parker Hannifin Corporation. All rights reserved.

Catalogue PDE2676TCUK - V4 - September 2015

Parker Hannifin Ltd.
Tachbrook Park Drive
Tachbrook Park,
Warwick, CV34 6TU
United Kingdom
Tel.: +44 (0) 1926 317 878
Fax: +44 (0) 1926 317 855
parker.uk@parker.com
www.parker.com