Skinner Valve

Two-Way, Three-Way and Four-Way Solenoid Valves

Catalog CFL00897

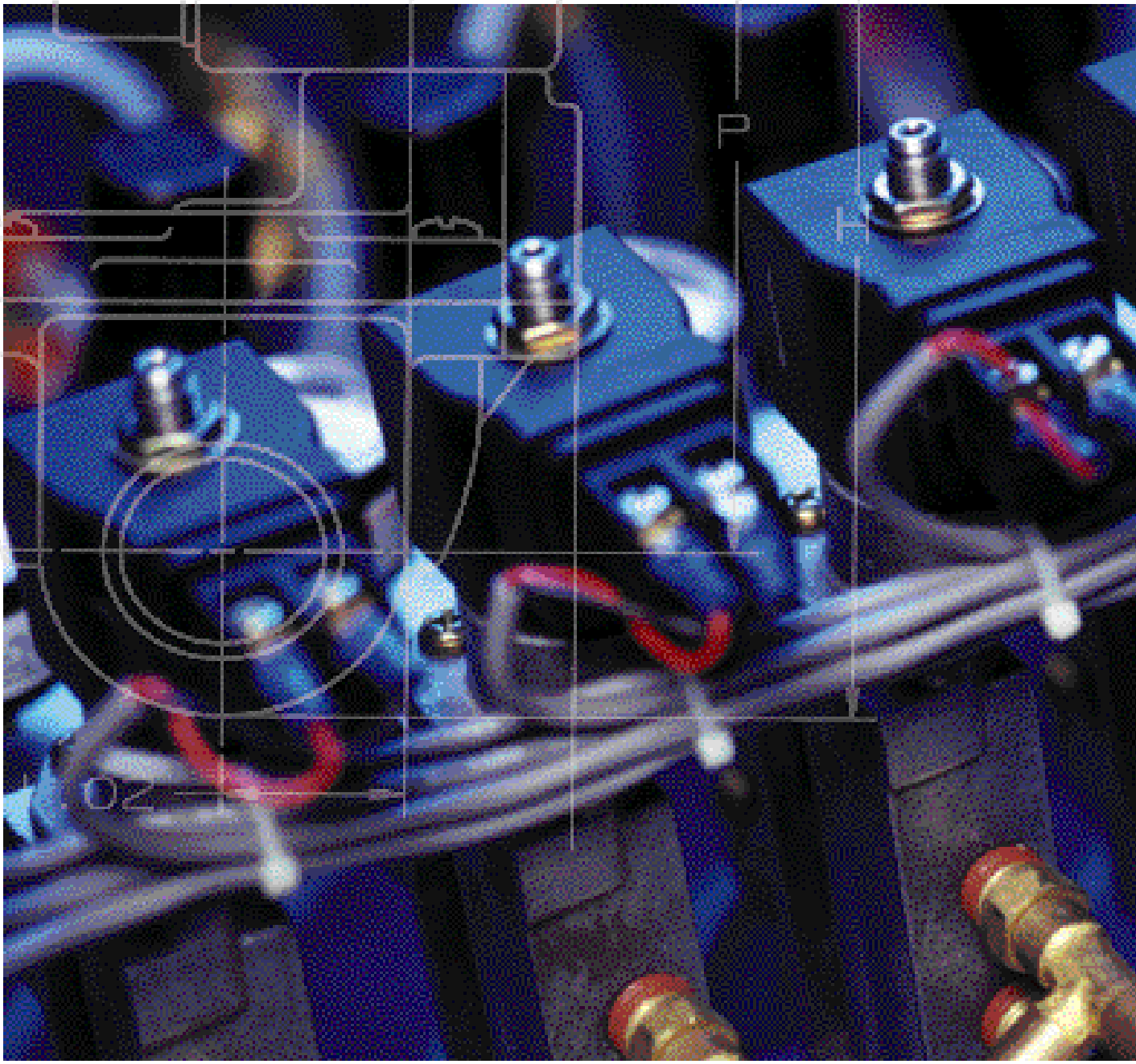

Climate & Industrial Controls

Table of Contents

Skinner Valve Introduction

Skinner Solenoid Valve Division

Skinner has been recognized as a leader in solenoid valve technology since 1949 when they first started manufacturing solenoid valves.

The Skinner and Lucifer facilities are both vertically integrated, manufacturing a large percentage of their component parts complete from the raw material level. This permits a high degree of control over the quality and availability of products. Each facility is equipped with a complete staff of experienced design engineers permitting rapid completion of customized valve designs for specific user requirements. Also, each facility has well equipped evaluation and testing laboratories to ensure proper valve operation, long cycle life, and optimum reliability of the product in the application.

With many affiliates worldwide, an extensive distribution network, and broad product breadth, Parker is in a unique position to service the world's requirements for solenoid valves.

WARNING

FAILURE OR IMPROPER SELECTION OR IMPROPER USE OF THE PRODUCTS AND/OR SYSTEMS DESCRIBED HEREIN OR RELATED ITEMS CAN CAUSE DEATH, PERSONAL INJURY AND PROPERTY DAMAGE.

This document and other information from Parker Hannifin Corporation, its subsidiaries and authorized distributors provide product and/or system options for further investigation by users having technical expertise. It is important that you analyze all aspects of your application and review the information concerning the product or system in the current product catalog. Due to the variety of operating conditions and applications for these products or systems, the user, through its own analysis and testing, is solely responsible for making the final selection of the products and systems and assuring that all performance, safety and warning requirements of the application are met.

The product described herein, including without limitation, product features, specifications, designs, availability and pricing, are subject to change by Parker Hannifin Corporation and its subsidiaries at any time without notice.

Offer of Sale

The items described in this document are hereby offered for sale by Parker Hannifin Corporation, its subsidiaries or its authorized distributors. This offer and its acceptance are governed by the provisions stated on the separate page of this document entitled "Terms and Conditions of Sale." (See page 145.)

Skinner Product Lines

The Skinner 7000 Series

7000 Series products have been designed to offer customers the ultimate in performance, versatility and quality. Every valve is engineered for optimal operation, is constructed with modern machinery that uses stringent processes, and provides standard features not offered in any competitive line. The 7000 Series is truly a world class product offering.

The Skinner 3000 Series

When reliable performance, economy and a compact design count, depend on Skinner Valve's 3000 Series. Developed with fully interchangeable components, the 3000 Series is user-flexible by design.

The Skinner 3000 Series is available in two- and three-way configurations, and is particularly adaptable to original equipment manufacturers involved in the development of fluid power/fluid control equipment in dispensing, blending, bio-medical and dental applications.

A, B, C, MB and V9 Products

Skinner A, B, C, MB and V9 line of solenoid valves include a wide variety of valve types, sizes and functional variations. They include 2-, 3- and 4-way valves designed specifically for use in hydraulic and pneumatic systems, as well as many varieties of general service products.

Available in a wide array of enclosures, coil types and seal materials, this product portfolio satisfies a wide range of end user application needs.

Skinner Intrinsically Safe Series

When designed into an intrinsically safe system, Skinner Valve's Intrinsically Safe solenoid valves provide a number of significant performance advantages: Low-Power Consumption; Low Temperature Rise; a Wide Range of Sizes; a Variety of Mounting Possibilities; Media Compatibility; a Wide Selection of Options; and Watertight Construction.

Skinner Intrinsically Safe solenoid valves have approvals for use in the United States and Canada in hazardous classifications for Classes I, II, III, Division 1 and 2, and in the United Kingdom for Division 0, 1 and 2. In Europe our valves are approved according to CENELEC standards.

Skinner K-Series

K-Series solenoid valves include a broad range of three-and four-way models designed to satisfy most pneumatic application requirements. Small in size, each valve includes features and performance capabilities usually found only on larger, more expensive solenoid valves.

The K-Series includes direct-acting and pilot-operated models in body-ported and subbase-mounted configurations. All models are supplied with non-locking manual overrides with lead wire or plug-in connectors. Valves with plug-in connectors include LED status indicators, reverse voltage protection and surge suppression.

Additional Skinner Products and Catalogs

Skinner Valve Actuation Series Catalog

The Valve Actuation Series includes a variety of three- and four-way valves designed with unique features and options enhancing their performance, operational reliability and application versatility.

The Series includes 7700 and 7300 Line, All-Ports-In-Body valves, Intrinsically Safe valves, Quick Exhaust valves, Direct Mount valves with NAMUR interface, Ultra Low-Power valves, along with a host of accessories and options. In addition, to satisfy the most stringent environmental demands, most valves are available in a choice of body materials including brass, stainless steel, and aluminum, as well as a variety of elastomeric seals.

Technical Reference Manual CTRM12-90

The Skinner Technical Reference Manual provides an overview of solenoid valve technology. Material provided includes a review of the components and functional varieties of solenoid valves available from Skinner Valve. In addition, the manual contains information considered essential in selecting valves for most standard applications.

Skinner Condensed Valve Listing

Pipe Size NPT	Pressure Vessel Number	Page	Operating Pressure Differential (PSI)			
			Min.	AC+ psi	DC+ psi	Body Mat'l
Two-Way Hydraulic Valves						
1/8"	A126LB13001	112	0	-	3000	SS
1/8"	A12LB13002	112	0	3000	-	SS
1/8"	71211SN1MM00	90	0	1000	1000	SS
1/8"	71221SN1MM00	90	0	1000	1000	SS
1/8"	A116LB13001	112	0	-	3000	SS
1/8"	A11LB13002	112	0	3000	-	SS
Two-Way MultiPurpose Valves						
1/8"	71235SN1AN00	20	0	400	400	SS
1/8"	71235SN1EN00	20	0	180	180	SS
1/8"	71235SN1GN00	20	0	110	110	SS
1/8"	71235SN1KN00	20	0	70	70	SS
1/8"	71235SN1MN00	20	0	45	45	SS
1/4"	71235SN2AN00	20	0	400	400	SS
1/4"	71235SN2EN00	20	0	180	180	SS
1/4"	71235SN2GN00	20	0	110	110	SS
1/4"	71235SN2KN00	20	0	70	70	SS
1/4"	71235SN2MN00	20	0	45	45	SS
Two-Way Normally Closed Valves						
Flange	7121FBF4GF00	15	0	1000	435	BR
Flange	7121FBF4NF00	15	0	365	125	BR
1/8"	71216SN1BL00	34	0	3000	2500	SS
1/8"	71216SN1FU00	34	0	1500	1000	SS
1/8"	71216SN1GL00	34	0	1250	500	SS
1/8"	7121KBN1GF00	15/34	0	1000	435	BR
1/8"	71215SN1EF00	16/34	0	1000	520	SS
1/8"	3121BBN1AN00	41	0	800	800	BR
1/8"	3121BSN1AN00	41	0	800	800	SS
1/8"	71215SN1GF00	16/34	0	700	350	SS
1/8"	7121KBN1LR00	34	0	500	175	BR
1/8"	71216SN1JT00	34	0	500	200	SS
1/8"	3121BBN1EN00	41	0	500	500	BR
1/8"	3121BSN1EN00	41	0	500	500	SS
1/8"	3121BSA6EN00	42	0	500	500	SS
1/8"	71215SN1EN00	16	0	450	450	SS
1/8"	B2*1400	43	0	400	400	SS
1/8"	7121KBN1NF00	15	0	365	125	BR
1/8"	71215SN1GN00	16	0	350	350	SS
1/8"	3121BBN1GN00	41	0	300	300	BR
1/8"	3121BSN1GN00	41	0	300	300	SS
1/8"	3121BSA6GN00	42	0	300	300	SS
1/8"	71215SN1KN00	16	0	275	275	SS
1/8"	C2*1277	45	0	275	-	BR
1/8"	71215SN1KF00	16	0	260	130	SS
1/8"	B2*1250	43	0	250	250	SS
1/8"	C2*1251	45	0	-	250	BR
1/8"	71215SN1MF00	16	0	200	100	SS
1/8"	71215SN1MN00	16	0	200	150	SS
1/8"	3121BBN1JN00	41	0	200	200	BR
1/8"	3121BSN1JN00	41	0	200	200	SS
1/8"	B2*1175	43	0	175	175	SS
1/8"	3121BBN1LN00	41	0	175	175	BR
1/8"	3121BSN1LN00	41	0	175	175	SS
1/8"	3121BSA6LN00	42	0	175	175	SS
1/8"	C2*1132	45	0	130	-	BR
1/8"	C2D420CF	45	0	130	-	BR
1/8"	71215SN1QN00	16	0	110	60	SS
1/8"	3121BBN1NN00	41	0	100	100	BR
1/8"	3121BSN1NN00	41	0	100	100	SS

Pipe Size NPT	Pressure Vessel Number	Page	Operating Pressure Differential (PSI)			
			Min.	AC+ psi	DC+ psi	Body Mat'l
1/8"	C2*1092	45	0	90	-	BR
1/8"	C2*1081	45	0	-	80	BR
1/8"	71215SN1SN00	16	0	80	25	SS
1/8" Male	71214LE1KN00	92	0	70	70	N
1/8"	C2*1062	45	0	60	-	BR
1/8" Male	71214LE1MN00	92	0	50	50	N
1/8"	B2*1052	43	0	50	-	SS
1/8"	C2*1051	45	0	-	50	BR
1/8"	3121BBN1QN00	41	0	50	50	BR
1/8"	3121BSN1QN00	41	0	50	50	SS
1/8"	3121BSA6QN00	42	0	50	50	SS
1/8"	71215SN1VN00	16	0	40	10	SS
1/8" Male	71214LE1QN00	92	0	35	35	N
1/8"	C2*1031	45	0	-	30	BR
1/8"	B2*1026	43	0	-	25	SS
1/8" Male	71214LE1SN00	92	0	20	20	N
1/4"	71216SN2BL00	34	0	3000	2500	SS
1/4"	73216BN2MT00	35	5	1500	800	BR
1/4"	73216SN2MT00	35	5	1500	800	SS
1/4"	71216SN2FU00	34	0	1500	1000	SS
1/4"	71216SN2GL00	34	0	1250	500	SS
1/4"	7121KBN2GR00	34	0	1100	435	BR
1/4"	7121KBN2GF00	15/34	0	1000	435	BR
1/4"	71215SN2EF00	15/34	0	1000	520	SS
1/4"	7121KBN2JR00	34	0	700	260	BR
1/4"	71215SN2GF00	15/34	0	700	350	SS
1/4"	7321HBN2SN00	35	5	600	435	BR
1/4"	7121KBN2LR00	34	0	500	175	B
1/4"	71216SN2JT00	34	0	500	200	SS
1/4"	71215SN2EN00	16	0	450	450	SS
1/4"	7121KBN2NF00	15	0	365	125	BR
1/4"	7121KBN2NR00	34	0	365	125	BR
1/4"	71215SN2GN00	16	0	350	350	SS
1/4"	73212BN2MN00	23	5	300	300	BR
1/4"	73212SN2MN00	23	5	300	300	SS
1/4"	7321KBY61640	25	3	300	45	BR
1/4"	71215SN2KN00	16	0	275	275	SS
1/4"	71215SN2KF00	16	0	260	130	SS
1/4"	71215SN2MF00	16	0	200	100	SS
1/4"	71215SN2MN00	16	0	200	150	SS
1/4"	7321KBN2RN00	23	3	150	60	BR
1/4"	7121KBN2NV00	15	0	145	125	BR
1/4"	7121KBN2QV00	15	0	120	60	BR
1/4"	71215SN2QN00	16	0	110	60	SS
1/4"	7121KBN2SV00	16	0	80	30	BR
1/4"	71215SN2SN00	16	0	80	25	SS
1/4"	71214VN2KN00	92	0	70	70	SS
1/4"	71214VN2KT00	92	0	70	70	SS
1/4"	71214TN2KT00	92	0	70	70	T
1/4"	71214VN2MN00	92	0	50	50	SS
1/4"	71214VN2MT00	92	0	50	50	SS
1/4"	71214TN2MT00	92	0	50	50	T
1/4"	71215SN2VN00	16	0	40	10	SS
1/4"	71214VN2QN00	92	0	35	35	SS
1/4"	71214VN2QT00	92	0	35	35	SS
1/4"	71214TN2QT00	92	0	35	35	T
1/4"	71214VN2SN00	92	0	20	20	SS
1/4"	71214VN2ST00	92	0	20	20	SS
1/4"	71215SN21N00	16	0	20	3	SS
1/4"	71214TN2ST00	92	0	20	20	T
3/8"	7321HBN3TN00	35	5	600	435	BR
3/8"	73212BN3SN00	23	5	300	300	BR
3/8"	7321KBY63200	25	3	300	45	BR

Pipe Size NPT	Pressure Vessel Number	Page	Operating Pressure Differential (PSI)			
			Min.	AC+ psi	DC+ psi	Body Mat'l
3/8”	7221GBN3VN00	21	0	230	100	BR
3/8”	73218BN3TN00	23	5	150	150	BR
3/8”	7321KBN3SN00	23	3	150	60	BR
3/8”	7321KBN3SNW0	37	3	150	60	BR
3/8”	72218BN3TN00	21	0	100	40	BR
3/8”	72218RN3TV00	21	0	100	40	SS
3/8” Barb	71214LT3KN00	92	0	70	70	N
3/8”	7121KBN3UV00	15	0	55	20	BR
3/8” Barb	71214LT3MN00	92	0	50	50	N
3/8” Barb	71214LT3QN00	92	0	35	35	N
3/8” Barb”	71214LT3SN00	92	0	20	20	N
3/8”	71215SN33N00	16	0	6	5	SS
3/8”	71215SN33NHP	16	0	5-11	0	SS
1/2”	7321HBN4UN00	35	5	600	435	BR
1/2”	73212BN4TN00	23	5	300	300	BR
1/2”	7321KBY6320A	25	3	300	45	BR
1/2”	7221GBN4VN00	21	0	230	100	BR
1/2”	73218BN4UN00	23	5	150	150	BR
1/2”	7321KBN4SN00	23	3	150	60	BR
1/2”	7321KBN4SNW0	37	3	150	60	BR
1/2”	72218BN4UN00	21	0	100	40	BR
1/2”	72218RN4UV00	21	0	100	40	SS
1/2”	7121KBN44V00	15	0	17.5	5	BR
1/2”	A2LB4017	48	0	15	-	BR
1/2”	A26LB4006	48	0	-	5	BR
3/4”	73212BN52N00	23	5	300	300	BR
3/4”	7321GBN53N00	23	5	230	230	BR
3/4”	7321GBN53NMC	37	5	230	230	BR
3/4”	7221GBN51N00	21	0	230	100	BR
3/4”	7221GBN51NC0	37	0	230	100	BR
3/4”	73218BN5VN00	23	5	150	150	BR
3/4”	72218BN5VN00	21	0	100	40	BR
3/4”	72218RN5VV00	21	0	100	40	SS
3/4”	XLG2O760	95	5	-	50	BR
3/4”	XLG2O600	95	5	50	-	BR
1”	XLG2O1060	95	5	-	50	BR
1”	73212BN63N00	23	5	300	300	BR
1”	7321GBN64N00	23	5	230	230	BR
1”	7321GBN64NMC	37	5	230	230	BR
1”	7221GBN61N00	21	0	230	100	BR
1”	7221GBN61NC0	37	0	230	100	BR
1”	7221GBN64N00	21	0	230	85	BR
1”	7221GBN64NC0	37	0	230	85	BR
1”	73218BN64N00	23	5	125	125	BR
1”	LB27BB6127	47	0	125	-	BR
1”	LB27B110	47	0	125	-	BR
1”	XLG2O1030	95	5	50	-	BR
1 1/4”	7321GBN76N00	23	5	230	230	BR
1 1/4”	7321GBN76NMC	37	5	230	230	BR
1 1/4”	73218BN75N00	23	5	125	125	BR
1 1/4”	LB27BB7127	47	0	125	-	BR
1 1/4”	LB27B120	47	0	125	-	BR
1 1/2”	7321GBN88N00	23	5	230	200	BR
1 1/2”	7321GBN88NMC	37	5	230	200	BR
1 1/2”	73218BN87N00	23	5	125	125	BR
1 1/2”	LB27BB8127	47	0	125	-	BR
1 1/2”	LB27B130	47	0	125	-	BR
1 1/2”	XLG2O1530	95	5	50	-	BR
2”	7321GBN99N00	23	5	230	200	BR
2”	7321GBN99NMC	37	5	230	200	BR

Pipe Size NPT	Pressure Vessel Number	Page	Operating Pressure Differential (PSI)			
			Min.	AC+ psi	DC+ psi	Body Mat'l
Two-Way Normally Open Valves						
1/8”	71225SN1EF00	18/35	0	750	750	SS
1/8”	7122KBN1GF00	18/34	0	435	435	BR
1/8”	7122KBN1PR00	34	0	435	-	BR
1/8”	71225SN1GF00	18/34	0	400	400	SS
1/8”	71295SN1ENJ1	19	0	400	400	SS
1/8”	B11*1400	43	0	400	400	SS
1/8”	71295SN1GNJ1	19	0	325	325	SS
1/8”	3129BBN1AN00	41	0	300	300	BR
1/8”	3129BSN1AN00	41	0	300	300	SS
1/8”	71295SN1KNJ1	19	0	250	250	SS
1/8”	B11*1200	43	0	200	200	SS
1/8”	3129BBN1EN00	41	0	200	200	BR
1/8”	3129BSN1EN00	41	0	200	200	SS
1/8”	7122KBN1LF00	18	0	175	175	BR
1/8”	71225SN1KF00	18	0	170	170	SS
1/8”	3129BBN1GN00	41	0	150	150	BR
1/8”	3129BSN1GN00	41	0	150	150	SS
1/8”	3129BBN1JN00	41	0	80	80	BR
1/8”	3129BSN1JN00	41	0	80	80	SS
1/8”	B11*1040	43	0	40	40	SS
1/8”	3129BBN1LN00	41	0	40	40	BR
1/8”	3129BSN1LN00	41	0	40	40	SS
1/4”	71225SN2EF00	18/34	0	750	750	SS
1/4”	7322HBN2SV00	35	5	600	600	BR
1/4”	7122KBN2GF00	18/34	0	435	435	BR
1/4”	71225SN2GF00	18/35	0	400	400	SS
1/4”	71295SN2ENJ1	19	0	400	400	SS
1/4”	71295SN2GNJ1	19	0	325	325	SS
1/4”	71295SN2KNJ1	19	0	250	250	SS
1/4”	73222BN2MN00	26	5	200	200	BR
1/4”	73222SN2MN00	26	5	200	200	SS
1/4”	7122KBN2LF00	18	0	175	175	BR
1/4”	71225SN2KF00	18	0	170	170	SS
3/8”	7322HBN3TN00	35	5	600	600	BR
3/8”	73222BN3SN00	26	5	200	200	BR
3/8”	73228BN3TN00	26	5	150	150	BR
3/8”	72228BN3TV00	22	0	125	125	BR
3/8”	72228RN3TV00	22	0	125	125	SS
1/2”	7322HBN4UN00	35	5	600	600	BR
1/2”	73222BN4TN00	26	5	200	200	BR
1/2”	73228BN4UN00	26	5	150	150	BR
1/2”	72228BN4UV00	22	0	125	125	BR
1/2”	72228RN4UV00	22	0	125	125	SS
3/4”	7322GBN53N00	26	5	230	230	BR
3/4”	7322GBN53NC0	37	5	230	230	BR
3/4”	73222BN52N00	26	5	200	200	BR
3/4”	73228BN5VN00	26	5	150	150	BR
3/4”	72228BN5VV00	22	0	125	125	BR
3/4”	72228RN5VV00	22	0	125	125	SS
1”	7322GBN64N00	26	5	230	230	BR
1”	7322GBN64NC0	37	5	230	230	BR
1”	73222BN63N00	26	5	200	200	BR
1”	73228BN64N00	26	5	125	125	BR
1 1/4”	7322GBN76N00	26	5	230	230	BR
1 1/4”	7322GBN76NC0	37	5	230	230	BR
1 1/4”	73228BN75N00	26	5	125	125	BR
1 1/2”	7322GBN88N00	26	5	170	170	BR
1 1/2”	7322GBN88NC0	37	5	170	170	BR
1 1/2”	73228BN87N00	26	5	125	125	BR
2”	7322GBN99N00	26	5	170	170	BR
2”	7322GBN99NC0	37	5	170	170	BR

Skinner Condensed Valve Listing continued

Pipe Size NPT	Pressure Vessel Number	Page	Operating Pressure Differential (PSI)			
			Min.	AC+ psi	DC+ psi	Body Mat'l
Two-Way External and Remote Pilot Valves						
3/8"	75232BN3SN00	40	0	190	-	BR
3/8"	74232BN3SNJ1	28	0	150	150	BR
1/2"	75232BN4TN00	40	0	190	-	BR
1/2"	74232BN4TNJ1	28	0	150	150	BR
3/4"	75232BN52N00	40	0	190	-	BR
3/4"	74232BN52NJ1	28	0	150	150	BR
1"	75232BN63N00	40	0	190	-	BR
1"	74232BN63NJ1	28	0	150	150	BR
Hot Water and Steam Valves						
Two-Way Normally Closed Valves						
1/4"	7321KBN2RE00	30	3	150	60	BR
1/4"	7121KBN2SE00	29	0	100	40	BR
1/4"	7321KBN2RES0	30	3	45	45	BR
1/4"	7121KBN2SES0	29	0	40	40	BR
3/8"	73218BN3TE00	30	5	150	150	BR
3/8"	7321KBN3SE00	30	3	150	60	BR
3/8"	7221GBN3VE00	29	0	150	100	BR
3/8"	73218BN3TTS0	30	3	125	-	BR
3/8"	72218BN3TE00	29	0	100	40	BR
3/8"	72218RN3TE00	30	0	100	40	SS
3/8"	73218BN3TES0	30	5	50	50	BR
3/8"	72218BN3TES0	29	0	50	-	BR
3/8"	72218RN3TES0	30	0	50	-	SS
3/8"	7321KBN3SES0	30	3	45	45	BR
3/8"	7221GBN3VES0	29	0	45	45	BR
1/2"	73218BN4UE00	30	5	150	150	BR
1/2"	7321KBN4SE00	30	3	150	60	BR
1/2"	7221GBN4VE00	29	0	150	100	BR
1/2"	73218BN4UTS0	30	3	125	-	BR
1/2"	72218BN4UE00	29	0	100	40	BR
1/2"	72218RN4UE00	30	0	100	40	SS
1/2"	73218BN4UES0	30	5	50	50	BR
1/2"	72218BN4UES0	29	0	50	-	BR
1/2"	72218RN4UES0	30	0	50	-	SS
1/2"	7321KBN4SES0	30	3	45	45	BR
1/2"	7221GBN4VES0	29	0	45	45	BR
3/4"	73218BN5VE00	30	5	150	150	BR
3/4"	7221GBN51E00	29	0	150	100	BR
3/4"	73218BN5VTS0	30	3	125	-	BR
3/4"	72218BN5VE00	29	0	100	40	BR
3/4"	72218RN5VE00	30	0	100	40	SS
3/4"	73218BN5VES0	30	5	50	50	BR
3/4"	72218BN5VES0	29	0	50	-	BR
3/4"	72218RN5VES0	30	0	50	-	SS
3/4"	7221GBN51ES0	29	0	45	45	BR
1"	7221GBN61E00	29	0	150	100	BR
1"	7221GBN64E00	29	0	150	100	BR
1"	73218BN64E00	30	5	125	125	BR
1"	73218BN64TS0	30	5	125	-	BR
1"	73218BN64ES0	30	5	50	50	BR
1"	7221GBN61ES0	29	0	45	45	BR
1"	7221GBN64ES0	29	0	45	45	BR
1 1/4"	73218BN75E00	30	5	125	125	BR
1 1/4"	73218BN75TS0	30	5	125	-	BR
1 1/4"	73218BN75ES0	30	5	50	50	BR
1 1/2"	73218BN87E00	30	5	125	125	BR
1 1/2"	73218BN87TS0	30	5	125	-	BR
1 1/2"	73218BN87ES0	30	5	50	50	BR

Pipe Size NPT	Pressure Vessel Number	Page	Operating Pressure Differential (PSI)			
			Min.	AC+ psi	DC+ psi	Body Mat'l
Two-Way Normally Open Valves						
3/8"	73228BN3TTS0	31	5	125	-	BR
3/8"	72228BN3TE00	30	0	125	125	BR
3/8"	72228RN3TE00	30	0	125	125	SS
3/8"	72228BN3TES0	30	0	50	-	BR
3/8"	72228RN3TES0	30	0	50	-	SS
1/2"	73228BN4UTS0	31	5	125	-	BR
1/2"	72228BN4UE00	30	0	125	125	BR
1/2"	72228RN4UE00	30	0	125	125	SS
1/2"	72228BN4UES0	30	0	50	-	BR
1/2"	72228RN4UES0	30	0	50	-	SS
3/4"	73228BN52TS0	31	5	125	-	BR
3/4"	72228BN5VE00	30	0	125	125	BR
3/4"	72228RN5VE00	30	0	125	125	SS
3/4"	72228BN5VES0	30	0	50	-	BR
3/4"	72228RN5VES0	30	0	50	-	SS
1"	73228BN64TS0	31	5	125	-	BR
1 1/4"	73228BN75TS0	31	5	125	-	BR
1 1/2"	73228BN87TS0	31	5	125	-	BR

+ *Pressure ratings apply to typical coil wattage ratings. See appropriate catalog page for specific power ratings.*
* *Denotes various coil and enclosure options. Refer to appropriate catalog page.*
^ *These valves are remote pressure operated, not solenoid operated. Refer to catalog listings for additional information.*

Pipe Size NPT	Pressure Vessel Number	Page	Operating Pressure Differential (PSI)			
			Min.	AC+ psi	DC+ psi	Body Mat'l
Three-Way Hydraulic Valves						
1/8”	71381SN1MM00	94	0	1000	1000	SS
1/8”	A16LB13002	113	0	3000	-	SS
1/8”	A166LB13001	113	0	-	3000	SS
1/8”	71331SN1MM00	94	0	1000	1000	SS
1/8”	71311SN1MM00	94	0	1000	1000	SS
1/8”	A13LB13002	113	0	3000	-	SS
1/8”	A136LB13001	113	0	-	3000	SS
1/8”	71321SN1MM00	94	0	1000	1000	SS
1/8”	A15LB13002	113	0	3000	-	SS
1/8”	A156LB13001	113	0	-	3000	SS
Three-Way Directional Control Valves						
1/8”	B16*1250	72	0	250	250	SS
1/8”	71385SN1GNJ1	56	0	235	235	SS
1/8”	3138BBN1AN00	70	0	230	230	BR
1/8”	3138BSN1AN00	70	0	230	230	SS
1/8”	B16*1200	72	0	200	200	SS
1/8”	B16*1175	72	0	175	175	SS
1/8”	3138BBN1EN00	70	0	160	160	BR
1/8”	3138BSN1EN00	70	0	160	160	SS
1/8”	3138BSA6EN00	70	0	160	160	SS
1/8”	71385SN1KNJ1	56	0	140	140	SS
1/8”	71385SN1MNJ1	56	0	125	125	SS
1/8”	3138BBN1GN00	70	0	120	120	BR
1/8”	3138BSN1GN00	70	0	120	120	SS
1/8”	3138BSA6GN00	70	0	120	120	SS
1/8”	3138BBN1JN00	70	0	80	80	BR
1/8”	3138BSN1JN00	70	0	80	80	SS
1/8”	3138BBN1LN00	70	0	60	60	BR
1/8”	3138BSN1LN00	70	0	60	60	SS
1/8”	B16*1050	72	0	50	50	SS
1/8”	3138BBN1NN00	70	0	35	35	BR
1/8”	3138BSN1NN00	70	0	35	35	SS
1/8”	3138BSA6NN00	70	0	35	35	SS
1/8”	3138BBN1QN00	70	0	20	20	BR
1/8”	3138BSN1QN00	70	0	20	20	SS
1/8”	3138BSA6QN00	70	0	20	20	SS
1/4”	A66LB2251	77	0	-	250	zinc
1/4”	A66LB2176	77	0	-	175	zinc
1/4”	A66LB2126	77	0	-	125	zinc
1/4”	A6LB2252	77	0	250	-	zinc
1/4”	71385SN2GNJ1	56	0	235	235	SS
1/4”	A6LB2177	77	0	175	-	zinc
1/4”	71385SN2KNJ1	56	0	140	140	SS
1/4”	71385SN2MNJ1	56	0	125	125	SS
1/4”	A6LB2127	77	0	125	-	zinc
3/8”	73382BN3RNJ1	60	10	180	180	BR
1/2”	73382BN4UNJ1	60	10	180	180	BR
3/4”	73382BN52NJ1	60	10	180	180	BR
Three-Way MultiPurpose Valves						
#10-32	MBD002	114	0	150	150	P
Flange	7133FBF4LVJ1	54	0	60	60	BR
1/8”	71335SN1ANJ1	56	0	400	400	SS
1/8”	71335SN1ENJ1	56	0	180	180	SS
1/8”	7133KBN1GVJ1	54	0	150	150	BR
1/8”	C4*1150	74	0	150	150	BR
1/8”	3133BBN1AN00	69	0	150	150	BR

Pipe Size NPT	Pressure Vessel Number	Page	Operating Pressure Differential (PSI)			
			Min.	AC+ psi	DC+ psi	Body Mat'l
1/8”	3133BSN1AN00	69	0	150	150	SS
1/8”	B14*1150	72	0	150	150	SS
1/8”	71335SN1GNJ1	56	0	115	115	SS
1/8”	7133KBN1JVJ1	54	0	100	100	BR
1/8”	3133BBN1EN00	69	0	100	100	BR
1/8”	3133BSN1EN00	69	0	100	100	SS
1/8”	3133BSA6EN00	70	0	100	100	SS
1/8”	B14*1100	72	0	100	100	SS
1/8”	71335SN1KNJ1	56	0	80	80	SS
1/8”	3133BBN1GN00	69	0	80	80	BR
1/8”	3133BSN1GN00	69	0	80	80	SS
1/8”	3133BSA6GN00	70	0	80	80	SS
1/8”	C4*1075	74	0	75	75	BR
1/8”	B14*1075	72	0	75	75	SS
1/8”	7133KBN1LVJ1	54	0	60	60	BR
1/8”	3133BBN1JN00	69	0	60	60	BR
1/8”	3133BSN1JN00	69	0	60	60	SS
1/8”	C4*1052	74	0	50	-	BR
1/8”	3133BBN1LN00	69	0	35	35	BR
1/8”	3133BSN1LN00	69	0	35	35	SS
1/8”	B14*1030	72	0	30	30	SS
1/8”	C4*1031	74	0	-	30	BR
1/8”	3133BBN1NN00	69	0	20	20	BR
1/8”	3133BSN1NN00	69	0	20	20	SS
1/8”	3133BSA6NN00	70	0	20	20	SS
1/8”	3133BBN1QN00	69	0	10	10	BR
1/8”	3133BSN1QN00	69	0	10	10	SS
1/8”	3133BSA6QN00	70	0	10	10	SS
1/4”	7133KBN2BVJ1	54	0	435	435	BR
1/4”	71335SN2ANJ1	56	0	400	400	SS
1/4”	71335SN2ENJ1	56	0	180	180	SS
1/4”	7133KBN2GVJ1	54	0	150	150	BR
1/4”	7133TVN2GV00	56	0	150	150	SS
1/4”	A4LB2152	76	0	150	-	zinc
1/4”	A46LB2151	76	0	-	150	zinc
1/4”	71335SN2GNJ1	56	0	115	115	SS
1/4”	7133KBN2JVJ1	54	0	100	100	BR
1/4”	7133TBN2JV00	54	0	100	100	BR
1/4”	7133TVN2JV00	56	0	100	100	SS
1/4”	A4LB2102	76	0	100	-	zinc
1/4”	A46LB2101	76	0	-	100	zinc
1/4”	71335SN2KNJ1	56	0	80	80	SS
1/4”	A4LB2077	76	0	75	-	zinc
1/4”	A46LB2076	76	0	-	75	zinc
1/4”	7133KBN2LVJ1	54	0	60	60	BR
1/4”	7133TBN2LV00	54	0	60	60	BR
1/4”	7133TVN2LV00	56	0	60	60	SS
1/4”	7133TBN2NV00	54	0	30	30	BR
1/4”	7133TVN2NV00	56	0	30	30	SS
Three-Way Normally Closed Valves						
Flange	7131FBF4LV00	50	0	100	100	BR
1/8”	71313SN1EN00	62	0	250	250	SS
1/8”	71313SN1ENJ1	62	0	250	250	SS
1/8”	71315SN1EN00	50	0	250	250	SS
1/8”	71315SN1ENJ1	50	0	250	250	SS
1/8”	7131KBN1GV00	50	0	215	215	BR
1/8”	71313SN1GN00	62	0	200	200	SS
1/8”	71313SN1GNJ1	62	0	200	200	SS
1/8”	71315SN1GN00	50	0	200	200	SS
1/8”	71315SN1GNJ1	50	0	200	200	SS
1/8”	3131BBN1AN00	69	0	200	200	BR

Pipe Size NPT	Pressure Vessel Number	Page	Operating Pressure Differential (PSI)			
			Min.	AC+ psi	DC+ psi	Body Mat'l
1/8"	3131BSN1AN00	69	0	200	200	SS
1/8"	B13*1200	72	0	200	200	SS
1/8"	B13A*1200	72	0	200	200	SS
1/8"	C3*1175	74	0	175	175	BR
1/8"	C3A*1175	74	0	175	175	BR
1/8"	3131BBN1EN00	69	0	150	150	BR
1/8"	3131BSN1EN00	69	0	150	150	SS
1/8"	3131BSA6EN00	70	0	150	150	SS
1/8"	B13*1150	72	0	150	150	SS
1/8"	B13A*1150	72	0	150	150	SS
1/8"	71313SN1KN00	62	0	125	125	SS
1/8"	71313SN1KNJ1	62	0	125	125	SS
1/8"	71315SN1KN00	50	0	125	125	SS
1/8"	71315SN1KNJ1	50	0	125	125	SS
1/8"	C3*1125	74	0	125	125	BR
1/8"	C3A*1125	74	0	125	125	BR
1/8"	7131KBN1LV00	50	0	100	100	BR
1/8"	3131BBN1GN00	69	0	100	100	BR
1/8"	3131BSN1GN00	69	0	100	100	SS
1/8"	3131BSA6GN00	70	0	100	100	SS
1/8"	B13*1100	72	0	100	100	SS
1/8"	B13A*1100	72	0	100	100	SS
1/8"	71313SN1MN00	62	0	90	90	SS
1/8"	71313SN1MNJ1	62	0	90	90	SS
1/8"	71315SN1MN00	50	0	90	90	SS
1/8"	71315SN1MNJ1	50	0	90	90	SS
1/8"	3131BBN1JN00	69	0	80	80	BR
1/8"	3131BSN1JN00	69	0	80	80	SS
1/8"	C3*1075	74	0	75	75	BR
1/8"	C3A*1075	74	0	75	75	BR
1/8"	3131BBN1LN00	69	0	60	60	BR
1/8"	3131BSN1LN00	69	0	60	60	SS
1/8"	C3*1050	74	0	50	50	BR
1/8"	C3A*1050	74	0	50	50	BR
1/8"	3131BBN1NN00	69	0	40	40	BR
1/8"	3131BSN1NN00	69	0	40	40	SS
1/8"	3131BSA6NN00	70	0	40	40	SS
1/8"	B13*1040	72	0	40	40	SS
1/8"	B13A*1040	72	0	40	40	SS
1/8"	71315SN1SN00	50	0	25	25	SS
1/8"	71315SN1SNJ1	50	0	25	25	SS
1/8"	3131BBN1QN00	69	0	10	10	BR
1/8"	3131BSN1QN00	69	0	10	10	SS
1/8"	3131BSA6QN00	70	0	10	10	SS
1/8"	71315SN1VNJ1	50	0	VAC	VAC	SS
1/4"	7131KBN2BR00	64	0	1100	1100	BR
1/4"	7131KBN2BF00	64	0	580	580	BR
1/4"	7131KBN2ER00	64	0	435	435	BR
1/4"	71313SN2EN00	62	0	250	250	SS
1/4"	71313SN2ENJ1	62	0	250	250	SS
1/4"	71315SN2EN00	50	0	250	250	SS
1/4"	71315SN2ENJ1	50	0	250	250	SS
1/4"	A3LB2252	76	0	250	-	zinc
1/4"	A36LB2251	76	0	-	250	zinc
1/4"	7131KBN2GV00	50	0	215	215	BR
1/4"	71313SN2GN00	62	0	200	200	S
1/4"	71313SN2GNJ1	62	0	200	200	SS
1/4"	71315SN2GN00	50	0	200	200	SS
1/4"	71315SN2GNJ1	50	0	200	200	SS
1/4"	7131TVN2GV00	50	0	200	200	SS
1/4"	A3LB2177	76	0	175	-	zinc

Pipe Size NPT	Pressure Vessel Number	Page	Operating Pressure Differential (PSI)			
			Min.	AC+ psi	DC+ psi	Body Mat'l
1/4"	A36LB2176	76	0	-	175	zinc
1/4"	7131KBN2JV00	50	0	150	150	BR
1/4"	7131TBN2JV00	50	0	150	150	BR
1/4"	7131TVN2JV00	50	0	150	150	SS
1/4"	71313SN2KN00	62	0	125	125	SS
1/4"	71313SN2KNJ1	62	0	125	125	SS
1/4"	71315SN2KN00	50	0	125	125	SS
1/4"	71315SN2KNJ1	50	0	125	125	SS
1/4"	A3LB2127	76	0	125	-	zinc
1/4"	A36LB2126	76	0	-	125	zinc
1/4"	7131TBN2LV00	50	0	110	110	BR
1/4"	7131TVN2LV00	50	0	110	110	SS
1/4"	7131EBN2LN00	62	0	100	100	BR
1/4"	7131KBN2LV00	50	0	100	100	BR
1/4"	71313SN2MN00	62	0	90	90	SS
1/4"	71313SN2MNJ1	62	0	90	90	SS
1/4"	71315SN2MN00	50	0	90	90	SS
1/4"	71315SN2MNJ1	50	0	90	90	SS
1/4"	7131TVN2NV00	50	0	70	70	SS
1/4"	7131TBN2RV00	50	0	30	30	BR
1/4"	71315SN2SN00	50	0	25	25	SS
1/4"	71315SN2SNJ1	50	0	25	25	SS
1/4"	71315SN2VNJ1	50	0	VAC	VAC	SS
3/8"	73312BN3RNJ0	57	10	180	180	BR
3/8"	73312BN3RNJ1	57	10	180	180	BR
1/2"	73312BN4UNJ0	57	10	180	180	BR
1/2"	73312BN4UNJ1	57	10	180	180	BR
3/4"	73312BN52NJ0	57	10	180	180	BR
3/4"	73312BN52NJ1	57	10	180	180	BR
Three-Way Normally Open Valves						
1/8"	71395SN1ENJ1	53	0	250	250	SS
1/8"	B15*1200	72	0	200	200	SS
1/8"	C5*1175	74	0	175	175	BR
1/8"	3139BBN1AN00	69	0	160	160	BR
1/8"	3139BSN1AN00	69	0	160	160	SS
1/8"	71395SN1GNJ1	53	0	150	150	SS
1/8"	B15*1150	72	0	150	150	SS
1/8"	71395SN1KNJ1	53	0	125	125	SS
1/8"	3139BBN1EN00	69	0	125	125	BR
1/8"	3139BSN1EN00	69	0	125	125	SS
1/8"	3139BSA6EN00	70	0	125	125	SS
1/8"	B15*1125	72	0	125	125	SS
1/8"	C5*1100	74	0	100	100	BR
1/8"	3139BBN1GN00	69	0	100	100	BR
1/8"	3139BSN1GN00	69	0	100	100	SS
1/8"	3139BSA6GN00	70	0	100	100	SS
1/8"	3139BBN1JN00	69	0	80	80	BR
1/8"	3139BSN1JN00	69	0	80	80	SS
1/8"	C5*1060	74	0	60	60	BR
1/8"	3139BBN1LN00	69	0	60	60	BR
1/8"	3139BSN1LN00	69	0	60	60	SS
1/8"	3139BBN1NN00	69	0	40	40	BR
1/8"	3139BSN1NN00	69	0	40	40	SS
1/8"	3139BSA6NN00	70	0	40	40	SS
1/8"	B15*1040	72	0	40	40	SS
1/8"	3139BBN1QN00	69	0	10	10	BR
1/8"	3139BSN1QN00	69	0	10	10	SS

Pipe Size NPT	Pressure Vessel Number	Page	Operating Pressure Differential (PSI)			
			Min.	AC+ psi	DC+ psi	Body Mat'l
1/8"	3139BBN1NN00	69	0	40	40	BR
1/8"	3139BSN1NN00	69	0	40	40	SS
1/8"	3139BSA6NN00	70	0	40	40	SS
1/8"	B15*1040	72	0	40	40	SS
1/8"	3139BBN1QN00	69	0	10	10	BR
1/8"	3139BSN1QN00	69	0	10	10	SS
1/8"	3139BSA6QN00	70	0	10	10	SS
1/4"	71395SN2ENJ1	53	0	250	250	SS
1/4"	A5LB2252	76	0	250	-	zinc
1/4"	A56LB2251	76	0	-	250	zinc
1/4"	A5LB2177	76	0	175	-	zinc
1/4"	A56LB2176	76	0	-	175	zinc
1/4"	7132TBN2NV00	53	0	150	-	BR
1/4"	71395SN2GNJ1	53	0	150	150	SS
1/4"	71395SN2KNJ1	53	0	125	125	SS
1/4"	A5LB2127	76	0	125	-	zinc
1/4"	A56LB2126	76	0	-	125	zinc
3/8"	73322BN3RNJ0	59	10	180	180	BR
3/8"	73322BN3RNJ1	59	10	180	180	BR
1/2"	73322BN4UNJ0	59	10	180	180	BR
1/2"	73322BN4UNJ1	59	10	180	180	BR
3/4"	73322BN52NJ0	59	10	180	180	BR
3/4"	73322BN52NJ1	59	10	180	180	BR
Three-Way External and Remote Pilot Valves						
3/8"	75332BN3RN00	68	0	180	-	BR
3/8"	74332BN3RNJ1	61	0	170	170	BR
1/2"	75332BN4UN00	68	0	180	-	BR
1/2"	74332BN4UNJ1	61	0	170	170	BR
3/4"	75332BN52N00	68	0	180	-	BR
3/4"	74332BN52NJ1	61	0	170	170	BR

+ Pressure ratings apply to typical coil wattage ratings.
See appropriate catalog pages for specific power ratings.
** Denotes various coil and enclosure options. Refer to appropriate catalog page.*
^ These valves are remote pressure operated, not solenoid operated.
Refer to catalog losting for additional information.

Pipe Size NPT	Pressure Vessel Number	Page	Operating Pressure Differential (PSI)			
			Min.	AC+ psi	DC+ psi	Body Mat'l
Four-Way Hydraulic Valves						
1/8"	A35LB12002	116	0	2000	-	SS
1/8"	A356LB12001	116	0	-	2000	SS
Four-Way Valves						
1/8"	7341LAN1HNM0	79	15	150	150	ALUM
1/4"	76419AN2NNCA	81	0	150	150	ALUM
1/4"	76419AN2NNCB	81	0	150	150	ALUM
1/4"	76429AN2NN00	81	0	150	150	ALUM
1/4"	76469AN2NN00	81	0	150	150	ALUM
1/4"	73419AN2NN00	80	15	150	150	ALUM
1/4"	73419AN2NNM0	80	15	150	150	ALUM
1/4"	7341LMN2NNM0	79	15	150	150	ZINC
1/4"	73417BN2KN00	82	30	150	150	BR
1/4"	73477BN2KN00	82	30	150	150	BR
1/4"	73417BN2PN00	82	30	150	150	BR
1/4"	73477BN2PN00	82	30	150	150	BR
1/4"	73417VN2KN00	82	30	150	150	SS
1/4"	73417VN2PN00	82	30	150	150	SS
1/4"	73477VN2KN00	82	30	150	150	SS
1/4"	73477VN2PN00	82	30	150	150	SS
1/4"	75419AN2NN00	80	^	150	150	ALUM
1/4"	V933L**2150	87	0	150	150	ZINC
1/4"	V935L**2150	87	0	150	150	ZINC
1/4"	V955L**2150	87	0	150	150	ZINC

Pipe Size NPT	Pressure Vessel Number	Page	Operating Pressure Differential (PSI)			
			Min.	AC+ psi	DC+ psi	Body Mat'l
1/4"	V933L**2100	87	0	100	100	ZINC
1/4"	V935L**2100	87	0	100	100	ZINC
1/4"	V955L**2100	87	0	100	100	ZINC
1/4"	V933L**2075	87	0	75	75	ZINC
1/4"	V933L**2050	87	0	50	50	ZINC
1/4"	V935L**2050	87	0	50	50	ZINC
1/2"	73417BN4UN00	82	30	150	150	BR
1/2"	73477BN4UN00	82	30	150	150	BR

+ Pressure ratings apply to typical coil wattage ratings. See appropriate catalog page for specific power ratings.
** Denotes various coil and enclosure options. Refer to appropriate catalog page.*
^ These valves are remote pressure operated, not solenoid operated. Refer to catalog listings for additional information.

Pipe Size NPT	Pressure Vessel Number	Page	Operating Pressure Differential (PSI)			
			Min.	AC+ psi	DC+ psi	Body Mat'l
Intrinsically Safe Valves						
Two-Way Normally Closed Valves						
1/4"	7121KBN2CV90	99	0	-	150	BR
1/4"	7121KBN2EV90	99	0	-	100	BR
1/4"	7121KBN2GV90	99	0	-	75	BR
1/2"	7321HBN4UN90	99	5	-	150	BR
3/4"	7321GBN53N90	99	5	-	150	BR
1"	7321GBN64N90	99	5	-	150	BR
1 1/4""	7321GBN76N90	99	5	-	150	BR
1 1/2"	7321GBN88N90	99	5	-	150	BR
2"	7321GBN99N90	99	5	-	150	BR
Three-Way Normally Closed Valves						
Flange	7131FBF4CV90	101	0	-	150	BR
Flange	7131FBNFEV90	101	0	-	100	BR
Flange	7131FBNFGV90	101	0	-	75	BR
1/4"	7131KBN2CV90	101	0	-	150	BR
1/4"	7131KBN2EV90	101	0	-	100	BR
1/4"	7131KBN2GV90	101	0	-	75	BR
1/4"	7131VVN2CV90	101	0	-	150	SS
1/4"	7131VVN2EV90	101	0	-	100	SS
1/4"	7131VVN2GV90	101	0	-	75	SS
1/4"	7331BAN2KN90	101	15	-	150	Alum
1/4"	U131E0391	103	1.5	-	105	BR
1/4"	U133X5196	101	0	-	150	SS
1/4"	U033X5156	103	0	-	150	SS
1/2"	7331LAV4TN90	101	7	-	150	Alum
Three-Way Universal Valves						
1/4"	U133X5196	101	0	-	150	SS
1/4"	U033X5156	103	0	-	150	SS
Four-Way Valves						
1/4"	7341BAN2JN90	104	15	-	150	Alum
1/4"	7347LMN2NN90	104	15	-	150	Zinc
1/2"	7341LAV4TN90	104	7	-	150	Alum
1"	7341LAV62N90	104	15	-	150	Alum

Pipe Size NPT	Pressure Vessel Number	Page	Operating Pressure Differential (PSI)			
			Min.	AC+ psi	DC+ psi	Body Mat'l
Manual Reset Valves						
Two-Way Normally Closed Valves						
1/4"	70215SN2KVVR	39	0	150	150	SS
1/4"	70215SN2KVET	39	0	150	150	SS
1/2"	70218BN4UNVR	39	5	150	150	BR
1/2"	70218BN4UNET	39	5	150	150	BR
3/4"	70212BN52NVR	39	5	300	300	BR
3/4"	70212BN52NET	39	5	300	300	BR
1"	70218BN64NVR	39	5	125	125	BR
1"	70218BN64NET	39	5	125	125	BR
1 1/4"	70218BN75NVR	39	5	125	125	BR
1 1/4"	70218BN75NET	39	5	125	125	BR
1 1/2"	70218BN87NVR	39	5	125	125	BR
1 1/2"	70218BN87NET	39	5	125	125	BR
Two-Way Normally Open Valves						
3/4"	70222BN52NVR	39	5	300	300	BR
3/4"	70222BN52NET	39	5	300	300	BR
1"	70228BN64NVR	39	5	125	125	BR
1"	70228BN64NET	39	5	125	125	BR
1 1/4"	70228BN75NVR	39	5	125	125	BR
1 1/4"	70228BN75NET	39	5	125	125	BR
1 1/2"	70228BN87NVR	39	5	125	125	BR
1 1/2"	70228BN87NET	39	5	125	125	BR
Three-Way Normally Closed Valves						
1/4"	70315SN2ENVR	66	0	200	200	SS
1/4"	70315SN2ENET	66	0	200	200	SS
1/4"	70315SN2GVVR	66	0	150	150	SS
1/4"	70315SN2GVET	66	0	150	150	SS
1/4"	70315SN2KVVR	66	0	90	90	SS
1/4"	70315SN2KVET	66	0	90	90	SS
1/4"	70315SN2MNVR	66	0	60	60	SS
1/4"	70315SN2MNET	66	0	60	60	SS
3/8"	70312BN3RNVR	66	10	180	180	BR
3/8"	70312BN3RNET	66	10	180	180	BR
1/2"	70312BN4UNVR	66	10	180	180	BR
1/2"	70312BN4UNET	66	10	180	180	BR
3/4"	70312BN52NVR	66	10	180	180	BR
3/4"	70312BN52NET	66	10	180	180	BR
Three-Way Normally Open Valves						
1/4"	70325SN2GNVR	66	0	150	150	SS
1/4"	70325SN2GNET	66	0	150	150	SS
3/8"	70322BN3RNVR	66	10	180	180	BR
3/8"	70322BN3RNET	66	10	180	180	BR
1/2"	70322BN4UNVR	66	10	180	180	BR
1/2"	70322BN4UNET	66	10	180	180	BR
3/4"	70322BN52NVR	66	10	180	180	BR
3/4"	70322BN52NET	66	10	180	180	BR

Pipe Size NPT	Pressure Vessel Number	Page	Operating Pressure Differential (PSI)			
			Min.	AC+ psi	DC+ psi	Body Mat'l
Three-Way Universal Valves						
1/4"	7033TVN2GVVR	67	0	150	150	SS
1/4"	7033TVN2GVET	67	0	150	150	SS
1/4"	U033X5156	67	0	145	145	SS
1/4"	7033TBN2JVVR	66	0	100	100	BR
1/4"	7033TBN2JVET	66	0	100	100	BR
1/4"	7033TVN2JVVR	67	0	100	100	SS
1/4"	7033TVN2JVET	67	0	100	100	SS
1/4"	7033TBN2NVVR	66	0	50	50	BR
1/4"	7033TBN2NVET	66	0	50	50	BR
1/4"	7033TVN2NVVR	67	0	50	50	SS
1/4"	7033TVN2NVET	67	0	50	50	SS
Four-Way Valves						
1/4"	70419AN2NNVR	84	15	150	150	Alum
1/4"	70419AN2NNET	84	15	150	150	Alum

Pipe Size NPT	Pressure Vessel Number	Page	Operating Pressure Differential (PSI)			
			Min.	AC+ psi	DC+ psi	Body Mat'l
K-Series						
Three-Way Valves						
	K3P01	117	0	100	-	Alum
	K3P02	117	0	100	-	Alum
	K3P03	117	0	114	-	Alum
	K3P04	117	0	114	-	Alum
	K3H01	117	28	-	100	Alum
	K3H02	117	28	-	100	Alum
	K3H03	117	28	-	100	Alum
	K3H04	117	28	-	100	Alum
	K3F01	117	0	-	100	Alum
	K3F02	117	0	-	100	Alum
Four-Way Valves						
	K4H01	119	28	-	100	Alum
	K4H02	119	28	-	100	Alum
	K4H03	119	28	-	100	Alum
	K4H04	119	28	-	100	Alum
	K4H05	119	28	-	100	Alum
	K4H06	119	28	-	100	Alum
	K4H07	119	28	-	100	Alum
	K4H08	119	28	-	100	Alum
	K4H09	119	28	-	100	Alum
	K4H10	119	28	-	100	Alum
	K4M01	121	0	-	120	Alum
	K4M02	121	0	-	120	Alum
	K4M03	121	0	-	120	Alum
	K4M04	121	0	-	120	Alum
	K4M05	121	0	-	120	Alum
	K4M06	121	0	-	120	Alum
	K4M07	121	0	-	120	Alum
	K4M08	121	0	-	120	Alum
	K4P01	122	21	100	100	Alum
	K4P02	122	21	100	100	Alum
	K4P03	122	21	114	114	Alum
	K4P04	122	21	114	114	Alum
	K4R01	123	28	100	100	Alum
	K4R02	123	28	100	100	Alum
	K4R03	123	28	100	100	Alum
	K4R04	123	28	100	100	Alum
	K4R05	123	28	100	100	Alum
	K4R06	123	28	100	100	Alum
	K4R07	123	28	100	100	Alum
	K4RL01	123	28	100	100	Alum
	K4RL02	123	28	100	100	Alum
	K5R01	123	28	100	100	Alum
	K5R02	123	28	100	100	Alum
	K5R03	123	28	100	100	Alum
	K5R04	123	28	100	100	Alum
	K5R05	123	28	100	100	Alum
	K5R06	123	28	100	100	Alum

Ordering Information

7000 SERIES

The 7000 Series product line uses a significant numbering system that allows every user an easy method to select, identify and understand the product being purchased. Each of the 20 characters denote a specific feature. The complete number provides a description of the valve configuration.

There are 6 different product categories that can be ordered. These product categories are:

Item	Description
1	Fully assembled valves with integrated coils
2	Fully assembled valves with conventional coils and enclosures
3	Pressure Vessels only
4	Integrated Coils only
5	Coil/Enclosure Assemblies
6	Accessories

Ordering Items 1 and 2, Fully Assembled Valves

Step 1: Select the Pressure Vessel catalog number based on the application requirements. The catalog number is specified in the individual catalog sections.

Step 2: Use the Mechanical Options Table, if required, to write the option code in place of the last two pressure vessel digits "00". See page 135.

Step 3: Select the appropriate integrated coil, and enter (N0 = nut and washer) in the 13th and 14th digit, or enclosure and conventional coil. See page 134 and 135.

Step 4: Use the Electrical Options Table, if required, to write the option code in place of the last two digits. See page 135.

Step 5: Use the Voltage Code to specify the correct voltage for the valve.

Pressure Vessel	Enclosure	Coil	Voltage Code
7121KBN2NV00	+ N0	+ C111	+ P3
7121KBN2NV00N0C111P3			
71215SN2VV00	+ N0	+ H222	+ C2
71215SN2VV00N0H222P3			

Ordering Items 3 and 4, Pressure Vessels, Integrated Coils

Pressure Vessels can be ordered as separate items. Simply select the catalog number and submit the order. If a mechanical option is desired, make sure that it is included in place of the last two "00" digits in the pressure vessel number.

Integrated Coils can also be ordered as separate items. Simply select the coil number and add the correct voltage code. If an electrical option is desired, make sure that it is included in place of the last two digits in the coil number, then specify the voltage by its code.

Example: Select integrated coil "C111" for a 120/60-110/50 voltage, the number to order this coil then becomes "C111P3".

Ordering Item 5, Coil/Enclosure Assemblies

Step 1: Select the appropriate enclosure
Step 2: Select the appropriate coil.
Step 3: Determine the correct voltage code.

Enclosure		Coil		Voltage Code
A0	+	J111	+	C2

A0J111C2 = Standard enclosure, molded Class F coil, 24VDC

Ordering Item 6, Accessories

Accessories can be purchased by simply specifying the part number with the accessories on page 137. If an enclosure or electrical option is being purchased as a separate item (as an accessory on pages 134 and 135) select the option number and place the order.

Example: To buy a 1/2" conduit DIN plug (electrical option code D2) as a separate accessory simply order "ELECD2".

Ordering Products Not Listed in the Catalog

When an application demands a combination of features not listed in the catalog, use the significant numbering system to specify the exact valve needed. Skinner Valve personnel will then assist in determining the applicability, availability and price of the new product.

Example: A 71215SN2GN00 with BSP porting can be requested by asking for a 71215SR2GN00. In this example the N (for NPT) was substituted with an R (for BSP) in the valve number.

If an application requires a combination of options not listed in the catalog, contact the Skinner Valve Customer Response Center at 860-827-2300 for a valve number and pricing.

3000 SERIES

The 3000 Series product line uses a significant numbering system to specify a particular valve. Each of the 20 characters or combination of characters denotes a specific feature or valve configuration. To order a 3000 Series valve, specify the full 20 digit number using the codes in the chart on page 140.

The first 12 digits designate the configuration of the Pressure Vessel, the next two digits (13th and 14th) designate the Enclosure, and the last 6 digits (15th through 20th) designate the Coil. Please note that the voltage is indicated by the last two digits of the coil and valve number.

The 12 digit pressure vessel number is selected based on the application requirements located in the 3000 Series catalog section.

Also note that not all combinations of materials or constructions are possible. If an application requires combinations of options not listed in the catalog, contact the Skinner Valve Customer Response Center at 860 827-2300 for a valve number and pricing.

A, B, C, MB AND V9 SERIES VALVES

Ordering Modified Valves for Exact Requirements:

Skinner valves can be easily modified to meet many special application requirements. Contact the Skinner Valve Customer Response Center at 860 827-2300 for a valve number and pricing.

A new valve number will be assigned after entry of the order. It will include any options specified at time of order entry.

Ordering MB Series Multiple Station Valve Manifolds:

MB Series valves may be manifolded to create any number of valve stations desired. Accessory kits and manifold bases for their assembly are described in the catalog section, MB Series Air Service Valves. See page 114 for detailed instructions on ordering manifold configurations.

Ordering Standard Catalog Valves:

Example:

1) Specify the valve catalog number-B2DA1250
2) Specify the required voltage-120V, 60Hz

Ordering Catalog Valves with Optional Features and/or Accessories:

Example:

1) Specify the valve catalog number-C2DA1251
2) Specify the option code-RM (Main Stream Metering)
3) Specify the required voltage-120V, 60Hz
4) Specify the accessory part number-VO-233 (Wrench Nut)

INTRINSICALLY SAFE VALVE ORDERING INFORMATION

Skinner Valve's Intrinsically Safe solenoid valves are available with a variety of coils and enclosures. Valve part numbers ending with 90 accept the following FM-approved coil numbers:

490885
490890
490895
490880
490860

Those valve part numbers ending with 91 and 96 only accept coil numbers:

490860
482660
483330.01

To Order a Complete Valve

Step 1: Select the base valve which meets the application requirements from pages 99 through 105. For special valve requirements or modifications consult Skinner Valve.

Step 2: Select the desired coil/enclosure combination from pages 106 through 110.

Step 3: Delete the first two digits of the coil part number (either 48 or 49) as these numbers are used for indicating a spare part.

Step 4: Add the remaining four digits of the coil part number to the end of the base valve number.

Step 5: All the I.S. coils are designed for 24VDC (nominal) service. Add the voltage code N7.

Example: An application requires a 1/4" NPTF, 3-way normally closed valve for instrument air flow at 1 SCFM. Brass is a suitable body material. The customer would like a splice box style coil enclosure.

1) Select the base valve. In this case: U131K0490.
2) Select the desired coil/enclosure combination. In this case: 490885
3) Delete the first two digits 49 to create the coil/enclosure suffix 0885.
4) Add coil number as a suffix to base valve number: U131K04900885.
5) Finally, add the voltage code N7 (24VDC nominal only): U131K04900885N7.

IS Coil Designs

Skinner's Intrinsically Safe valve offering contains a variety of coil designs. The five different coil styles allow the project engineer to select the optimum coil configuration for the application.

The Splice Box Coil contains a small compartment in which to make the electrical terminations, eliminating the need for a separate junction box. Our Potted Lead Wire Coil has a metal enclosure for maximum environmental protection and integral strain relief on the two meter cable.

Two coils with DIN-style spade terminations are also available. The Potted Coil with DIN connection has a metal enclosure for added protection, while the 32mm DIN Coil is our most compact coil style. The 32mm DIN is ideal for installations with space limitations or for use on our multi-station manifold assemblies.

Finally, the Booster Circuit Coil is used on many of our special purpose valve designs. By generating a brief burst of power, the Booster Circuit Coil can operate our Quick Exhaust valve and high-flow direct operated models.

All five intrinsically safe coil designs are built to meet NEMA 4 Watertight construction, and are approved for T6 temperature classification to address the most demanding applications. If the use of electrical conduit is preferred, 1/2" NPT conduit hub adaptors may be ordered for field installation.

Sleeve Exhaust Adaptor

To facilitate pipe connections to the I.S. valve operator (3-way), a sleeve exhaust adaptor may be ordered separately for field installation. The adaptor, U21-004, contains G 1/8 female (BSP) and 1/4" NPT female threads.

K SERIES ORDERING INFORMATION

To order Skinner K-Series valves follow the three easy steps listed. Remember to use all three charts for each valve type.

Step 1: Choose the valve number from the first chart in the applicable section. (Example: For a K4P valve, the first chart is labeled K-Series Four-Way, Pilot-Operated Valves. Example: K4P01)

Step 2: Specify the desired voltage from the second chart in the applicable section. (Example: For a K4P valve, the second chart is labeled K-Series Four-Way K4P Voltages. Example choice is 24VDC. The number is now K4P01-24VDC.)

Step 3: Select the subbase or manifold from the third chart in the applicable section. (Example: For a K4P valve, the third chart is labeled K-Series Four-Way K4P Manifolds. Example choice is a 2-station manifold. The order number specified now should read K4P01-24VDC with subbase K01-026.)

Coil Information

7000 SERIES COILS

Integrated Coil Offering (These coils utilize enclosure code "N0". For coil dimensions, see page 139.)

	Coil Code	Type of Termination	Wattage	Description
	L111	Leads	10	Class F Molded with 18" leads
	L222	Leads	10	Class H Molded with 18" leads
	L322	Leads	22	Class H Molded with 18" leads
	C111	1/2" Conduit	10	Class F Molded, NEMA 1, 2, 3, 3s, 4, 4x, 18" leads
	C222	1/2" Conduit	10	Class H Molded, NEMA 1, 2, 3, 3s, 4, 4x, 18" leads
	C322	1/2" Conduit	22	Class H Molded, NEMA 1, 2, 3, 3s, 4, 4x, 18" leads
	H111	1/2" Conduit	10	Class F Molded, NEMA 3, 3s, 4, 4x, 7, 9 18" leads
	H222	1/2" Conduit	10	Class H Molded, NEMA 3, 3s, 4, 4x, 7, 9 18" leads
	H322	1/2" Conduit	22	Class H Molded, NEMA 3, 3s, 4, 4x, 7, 9 18" leads
	H1S1	1/2" Conduit Stainless	10	Class F Molded, NEMA 3, 3s, 4, 4x, 7, 9 18" leads, stainless steel
	H2S1	1/2" Conduit Stainless	10	Class H Molded, NEMA 3, 3s, 4, 4x, 7, 9 18" leads, stainless steel
	H3S1	1/2" Conduit Stainless	22	Class H Molded, NEMA 3, 3s, 4, 4x, 7, 9 18" leads, stainless steel
	D100	DIN	10	Class F Molded
	D200	DIN	10	Class H Molded
	D300	DIN	22	Class H Molded
	S100	Screw	10	Class F Molded
	S200	Screw	10	Class H Molded
	S300	Screw	22	Class H Molded
	T100	1/4" Tab	10	Class F Molded

Conventional Coil Offering (These coils require conventional coil enclosures-see page 134.)

	J111	Leads	10	Class F Molded with 18" leads
	J222	Leads	10	Class H Molded with 18" leads
	J322	Leads	22	Class H Molded with 18" leads

Specialty Coils (These coils require conventional coil enclosures-see page 134.)

	J611	18" Leads	1.3	Fluxtron 2 wire, low power, low temperature
	F611	18" Leads	1.1	Fluxtron 4 wire, low power, low temperature (TTL logic level compatible)
	J011	18" Leads	0	Magnelatch 2 wire, DC only
	G011	18" Leads	0	Magnelatch 3 wire, AC or DC (pulse)

Notes:

- *For coil temperature information, refer to Technical Information section beginning on page 128.*
- *Refer to 7000 Series numbering system description beginning on page 133 for voltage code designations.*
- *Ordinary Location Agency: Underwriter's Laboratories Inc. (UL), Ordinary Location File Number MH 155507/ Canadian Standards Association (CSA), Ordinary Location File Number LR 10716*
- *Hazardous location coils certified for Class I, Division 1 and 2, Groups A,B,C,D; Class II, Division 1 and 2, Groups E,F,G. Agency File Numbers: Underwriter's Laboratories Inc. (UL), Hazardous Location File Number E 23267/ Canadian Standards Association (CSA), Hazardous Location File Number LR 16286*
- *DIN terminations per DIN 43650/ ISO 4400 requirements.*
- *Valves with AC Fluxtron coils receive a 10 watt pressure rating. Valves with a DC Fluxtron coil receive a DC pressure rating.*
- *Fluxtron coils are not available for direct lift valves (code 2 in position 2) or for steam service valves (code S0 in position 11,12 of the pressure vessel)*
- *Magnelatch coils are equipped with permanent magnets to retain plunger position after power is removed.*
- *Magnelatch coils receive the same pressure ratings as a valve with a 10 watt coil.*
- *Magnelatch coils are not available for steam service valves (S0 in position 11,12 of the pressure vessel)*
- *Magnelatch coils use minimal average power and have no appreciable temperature rise.*

Available Voltages

Standard available voltages are listed here. Additional voltages can be satisfied with a new coil of a specific voltage. Consult Skinner.

Note: Valves encoded with 4th digit = 2 (i.e. 7122, 7222, 7322, except for 71221 and 73222) do not meet UL temperature approval requirements on 50Hz voltages when supplied with 10 watt or 22 watt dual frequency coils listed here. Consult Skinner if UL approval is required. However, the following voltages and codes can be specified for operating these valves on 60Hz:

120/60	B6
240/60	B8
480/60	1B

Integrated, Conventional and Magnelatch Coil Voltages

DC Voltage	Voltage Code	Agency Approval
12 VDC	C1	Yes
24 VDC	C2	Yes
48 VDC	C4	Yes
120 VDC	C6	Yes
AC Voltage	**Voltage Code**	**Agency Approval**
24/60	B2	Yes
110/50, 120/60	P3	Yes
208/60	2K	Yes
220/50, 240/60	Q3	Yes
440/50, 480/60	Q8	Yes

Fluxtron Coil Voltages

Voltage	Voltage Code	Agency Approval
12 VDC	C1	Yes
24 VDC	C2	Yes
48 VDC	C4	Yes
120 VDC	C6	Yes
24-50/60 AC	P0	Yes
110/50, 120/60 AC	2W	Yes
220/50, 240/60 AC	3W	Yes

Note: Not available in coil types H111, H222, H322

CENELEC Approved Coils

	Coil Code	Type of Termination	Wattage	Protection/ Temperature Class	Description	Certificate of Conformity
	HZ09	3-wire cable gland	10	EEx d II C T4 (IP 65)	Molded Class F, internal and external grounding Cable length: 1500 mm	LCIE 96.D6196X
	HZ10	3-wire cable gland	10	EEx m II T6 (IP 65)	Molded Class H, internal and external grounding Cable length: 1500 mm	LCIE 97.D6126X
	HZ11	3-wire cable gland	22	EEx m II T6 (IP 65)	Molded Class H, internal and external grounding Cable length: 1500 mm	LCIE 97.D6126X
	VZ03	cable connection		EEx me II T3/T4 (IP 65)	Reinforced plastic housing, rectification diodes and varistor protection are encapsulated, screw termination in terminal box	LCIE 92.6036X
	VZ06	cable connection		EEx e II T4 (IP 67)	Metal housing with encapsulated screw terminal coil, internal and external ground screws	LCIE 86.6161X

Notes:
- ** See page 128 for operating temperature classification codes and maximum allowable surface temperatures.*
- ** IP65 and IP67 according to DIN 40050 and IEC 529 standards. Equivalent to NEMA 4 watertight. See page 136 for statement of Degree of Protection of electrical parts.*

3000 SERIES COILS

	Coil Code	Type of Termination	Wattage	Description
	M1S1	1/4" Tab	6	Class B Molded
	M4S1	1/4" Tab	3	Class B Molded
	M3J5	12" leads	6	Class B Molded
	M6J5	12" leads	3	Class B Molded

	Coil Code	Type of Termination	Wattage	Description
	MC11	1/2" Conduit	6	Class F Integrated NEMA 4X, 18" leads
	MH11	1/2" Conduit	6	Class F Integrated NEMA 4X,7,9, 18" leads
	T1J1	12" leads	6	Class B taped
	T3J1	12" leads	3	Class B taped

Notes:
- ** For all 6 watt coils, actual wattage for 24/60 volt is 7.5.*
- ** Hazardous location coils meet requirements for Class I, Division 1 and 2, Groups A,B,C,D; Class II, Division 1 and 2, Groups E,F,G*
- ** Taped leaded coils contain 24 gauge AWG leads.*
- ** Molded leaded coils contain 22 gauge AWG leads.*
- ** AC coils contain full wave bridge rectifier.*
- ** Molded coils are one piece construction.*

Two-Way Valve Contents

SPECIFICATIONS

Mechanical Characteristics

Standard Materials of Construction

- Body – Brass or Stainless Steel (430F)
- Seals – NBR, FKM, PCTFE as listed, EPDM as listed
- Sleeve Tube – Stainless Steel (303 or 304)
- Plunger – Stainless Steel (430FR)
- Stop – Stainless Steel (430FR)
- Springs – Stainless Steel (18-8)
- Shading Rings – Copper
- Pilot Orifice – Stainless Steel (303)

Compatible Fluids

- Lubricated Air, Non-Lubricated Air, Inert Gases, Water, Hydraulic Fluids, Petroleum Products and additional fluids compatible with materials of construction. Use of non-lubricated gaseous media will substantially limit valve life.

Electrical Characteristics

Voltages

- DC–12, 24
- AC–24/60, 110/50-120/60, 208/60, 220/50-240/60, 440/50-480/60 (other AC/DC voltages available upon request)

Agency Approvals

- UL and CSA approvals are available on valves with applicable coil/enclosure combinations. For additional information see page 136.

Power Consumption

- 10, 22 watts
- Fluxtron Electronic Coils and Magnelatch (refer to page 137 for current draw charts)

Miscellaneous

Maximum Ambient Temperature

- 10 watt AC/DC – 150°F
- 22 watt AC/DC – 77°F
- Fluxtron/Magnelatch – 122°F

7121 DIRECT ACTING BRASS VALVES – NORMALLY CLOSED, PCTFE OR FKM SEALS

Pipe Size NPT	Orifice Size (inch)	Cv Factor	Operating Pressure Differential (PSI) Min.	Maximum AC Ratings 10 watt	Maximum AC Ratings 22 watt	Maximum DC Ratings 10 watt	Maximum DC Ratings 22 watt	MAX.* Fluid Temp. (F)	Pressure Vessel Number	UL/CSA** Approval	Const. Ref.
FLG^	1/16	0.11	0	1000		435		165	7121FBF4GF00	GP	1
	1/8	0.31	0	365		125		165	7121FBF4NF00	GP	1
1/8	1/16	0.11	0	1000		435	700	165	7121KBN1GF00	GP	2
	1/8	0.31	0	365		125	205	165	7121KBN1NF00	GP	2
1/4	1/16	0.11	0	1000		435	700	165	7121KBN2GF00	GP	2
	1/8	0.31	0	365		125	205	165	7121KBN2NF00	GP	2
	1/8	0.31	0	145		125	125	185	7121KBN2NV00	SS	2
	5/32	0.52	0	120		60	75	185	7121KBN2QV00	SS	2
	13/64	0.76	0	80		30	40	185	7121KBN2SV00	SS	2
3/8	1/4	0.83	0	55		20	20	185	7121KBN3UV00	SS	2
1/2	7/16	2.5	0	17.5	35	5	10	185	7121KBN44V00	SS	3

^ *2, 3 and 5 station subbases with 1/4" BSP common inlet port and 1/8" BSP outlet port are available for use with D400 and D500 32mm DIN coils only. For details consult factory.*

7121 DIRECT ACTING STAINLESS STEEL VALVES – NORMALLY CLOSED, PCTFE OR NBR SEALS

'5' Family valves listed below containing NBR seals are also available with FKM seals.

Pipe Size NPT	Orifice Size (inch)	Cv Factor	Operating Pressure Differential (PSI) Min.	Maximum AC Ratings 10 watt	Maximum AC Ratings 22 watt	Maximum DC Ratings 10 watt	Maximum DC Ratings 22 watt	Fluid Temp. (F)	MAX.* Pressure Vessel Number	UL/CSA** Approval	Const. Ref.
1/8	3/64	0.06	0	1000		520	1000	165	71215SN1EF00	GP	4
	3/64	0.06	0	450		450		185	71215SN1EN00	SS	4
	1/16	0.1	0	700		350	700	165	71215SN1GF00	GP	4
	1/16	0.1	0	350		350		185	71215SN1GN00	SS	4
	3/32	0.18	0	260	650	130	300	165	71215SN1KF00	GP	4
	3/32	0.18	0	275		275		185	71215SN1KN00	SS	4
	1/8	0.28	0	200	520	100	200	165	71215SN1MF00	GP	4
	1/8	0.28	0	200		150	200	185	71215SN1MN00	SS	4
	5/32	0.4	0	110	150	60	130	185	71215SN1QN00	SS	4
	3/16	0.5	0	80	90	25	70	185	71215SN1SN00	SS	4
	1/4	0.75	0	40	70	10	30	185	71215SN1VN00	SS	4
1/4	3/64	0.06	0	1000		520	1000	165	71215SN2EF00	GP	4
	3/64	0.06	0	450		450		185	71215SN2EN00	SS	4
	1/16	0.1	0	700		350	700	165	71215SN2GF00	GP	4
	1/16	0.1	0	350		350		185	71215SN2GN00	SS	4
	3/32	0.18	0	260	650	130	300	165	71215SN2KF00	GP	4
	3/32	0.18	0	275		275		185	71215SN2KN00	SS	4
	1/8	0.28	0	200	520	100	200	165	71215SN2MF00	GP	4
	1/8	0.28	0	200		150	200	185	71215SN2MN00	SS	4
	5/32	0.4	0	110	150	60	130	185	71215SN2QN00	SS	4
	3/16	0.5	0	80	90	25	70	185	71215SN2SN00	SS	4
	1/4	0.75	0	40	70	10	30	185	71215SN2VN00	SS	4
	5/16	1.1	0	20	55	3	10	185	71215SN21N00	SS	5
3/8	3/8	2	0	6	25		5	185	71215SN33N00	SS	6
	3/8	2	0	5-11				185	71215SN33NHP+	SS	6

* *Maximum fluid temperatures are provided for Class F coils. Valves with FKM seals (letter "V" in 10th position of pressure vessel number) can be used at fluid temperatures up to 240°F on DC and 250°F on AC provided a Class H coil is used.*

** *UL/CSA Approval Information: SS=Safety Shutoff GP=General Purpose Blank=Not Approved*

See page 136 for additional agency approval information.

+ 5-11PSI is the operating pressure range for bubbletight sealing. Valves may leak if the pressure differential falls below 5 PSI. Fluxtron coils not suitable for use with these valves.

DRAWINGS

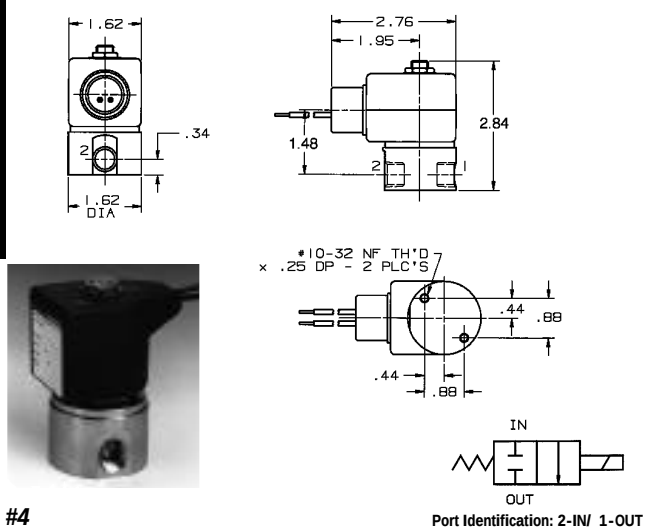

#4

Port Identification: 2-IN/ 1-OUT

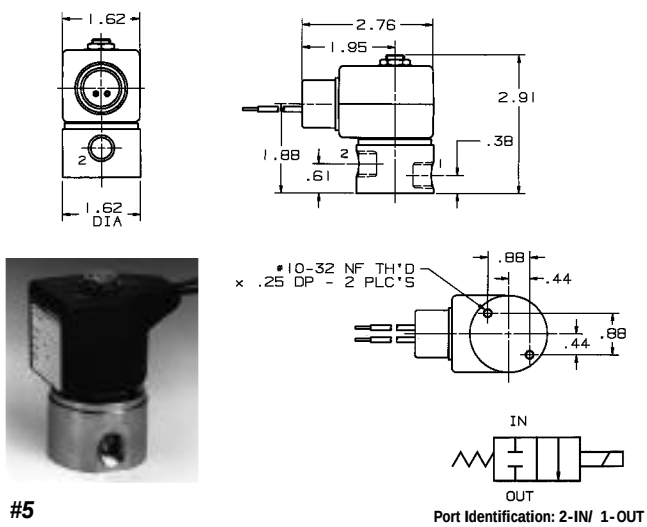

#5

Port Identification: 2-IN/ 1-OUT

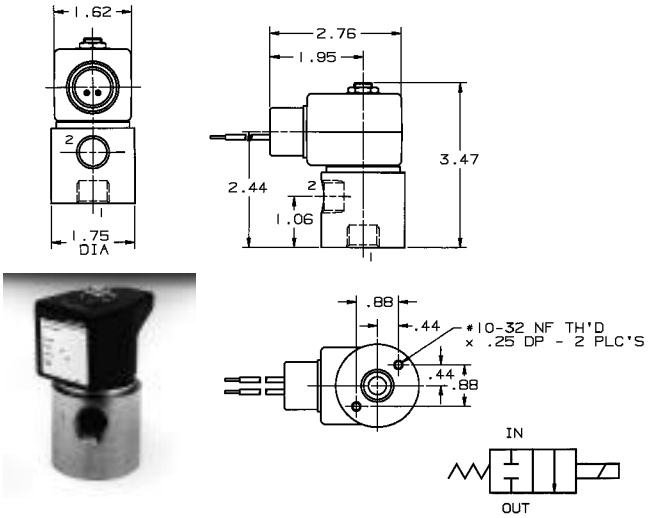

#6 Port Identification: 2-IN/ 1-OUT

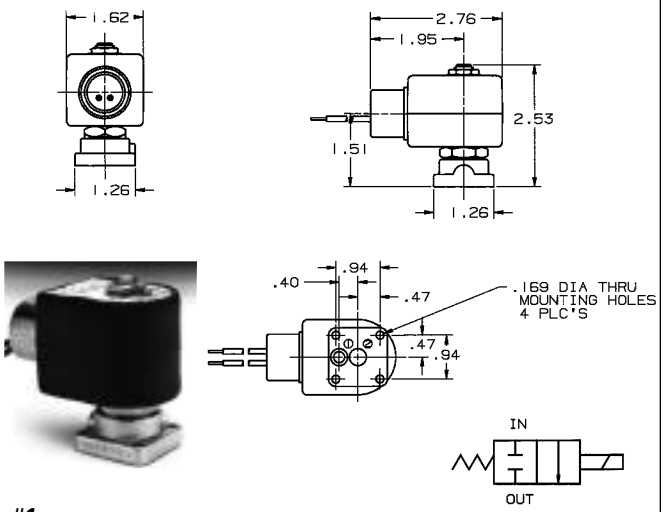

#1 Port Identification: 1-IN/ 2-OUT

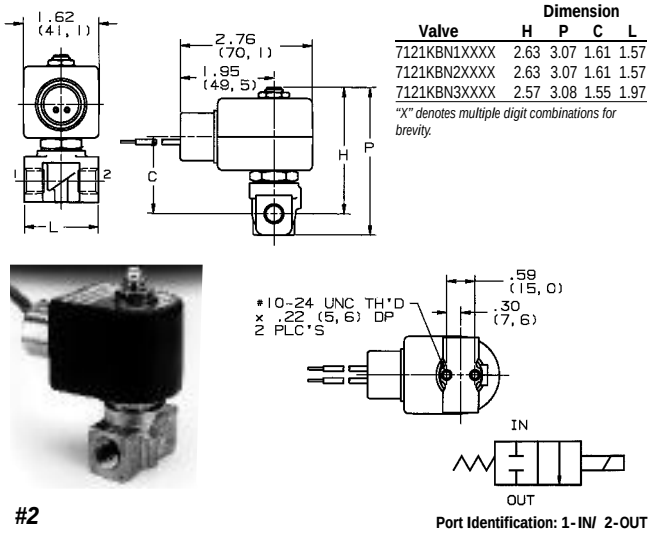

Valve	Dimension H	P	C	L
7121KBN1XXXX	2.63	3.07	1.61	1.57
7121KBN2XXXX	2.63	3.07	1.61	1.57
7121KBN3XXXX	2.57	3.08	1.55	1.97

"X" denotes multiple digit combinations for brevity.

#2 Port Identification: 1-IN/ 2-OUT

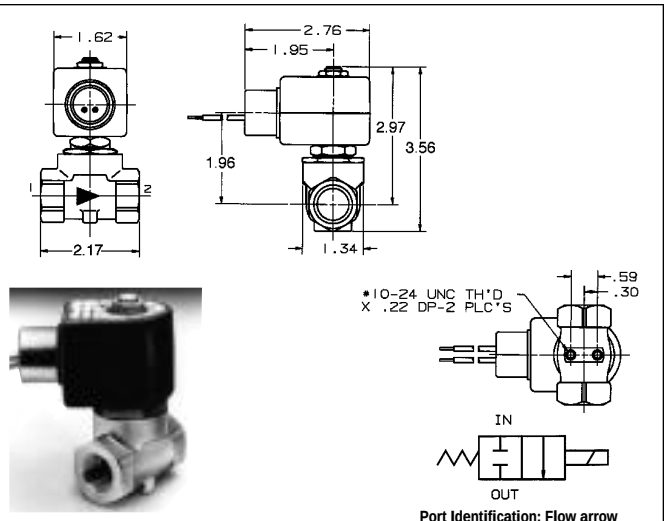

#3 Port Identification: Flow arrow on body indicates flow direction– ports are not marked.

7122 DIRECT ACTING BRASS VALVES – NORMALLY OPEN, PCTFE SEALS

Pipe Size NPT	Orifice Size (inch)	Cv Factor	Operating Pressure Differential (PSI) Min.	Maximum AC Ratings 10 watt	Maximum AC Ratings 22 watt	Maximum DC Ratings 10 watt	Maximum DC Ratings 22 watt	MAX.* Fluid Temp. (F)	Pressure Vessel Number	UL/CSA** Approval	Const. Ref.
1/8	1/16	0.11	0	435		435		165	7122KBN1GF00	GP	96
	3/32	0.21	0	175		175		165	7122KBN1LF00	GP	96
1/4	1/16	0.11	0	435		435		165	7122KBN2GF00	GP	96
	3/32	0.21	0	175		175		165	7122KBN2LF00	GP	96

7122 DIRECT ACTING STAINLESS STEEL VALVES – NORMALLY OPEN, PCTFE SEALS

5' Family valves listed below containing NBR seals are also available with FKM seals.

Pipe Size NPT	Orifice Size (inch)	Cv Factor	Operating Pressure Differential (PSI) Min.	Maximum AC Ratings 10 watt	Maximum AC Ratings 22 watt	Maximum DC Ratings 10 watt	Maximum DC Ratings 22 watt	MAX.* Fluid Temp. (F)	Pressure Vessel Number	UL/CSA** Approval	Const. Ref.
1/8"	3/64	0.05	0	750		750		165	71225SN1EF00	GP	99
	1/16	0.11	0	400		400		165	71225SN1GF00	GP	99
	3/32	0.15	0	170		170		165	71225SN1KF00	GP	99
1/4	3/64	0.05	0	750		750		165	71225SN2EF00	GP	99
	1/16	0.11	0	400		400		165	71225SN2GF00	GP	99
	3/32	0.15	0	170		170		165	71225SN2KF00	GP	99

DRAWINGS

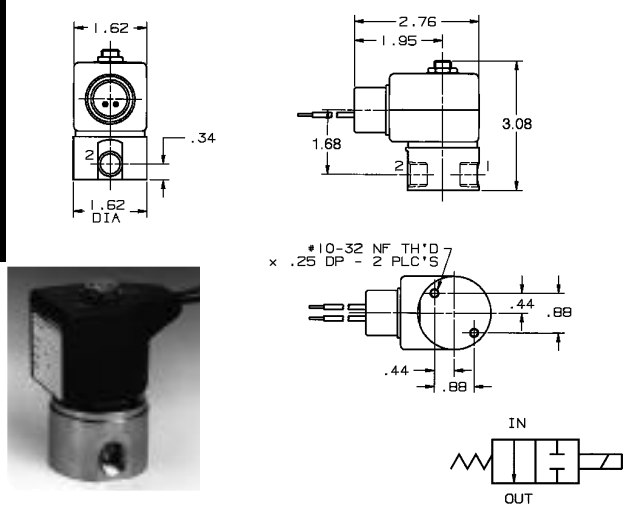

#99

Port Identification: 2-IN/ 1-OUT

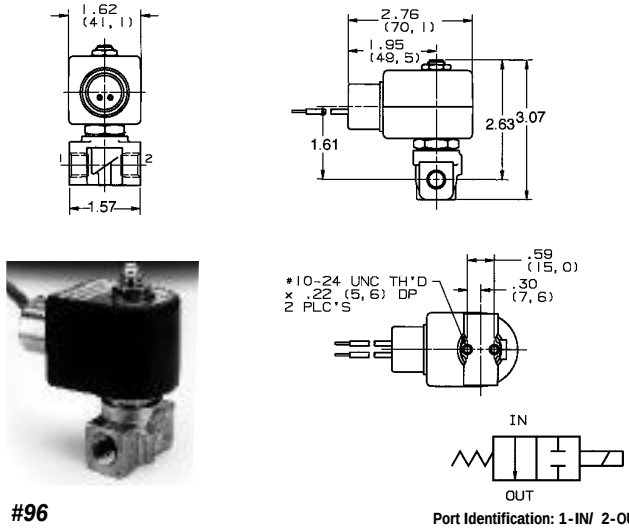

#96

Port Identification: 1-IN/ 2-OUT

7129 DIRECT ACTING STAINLESS STEEL VALVES – NORMALLY OPEN, NBR SEALS

'5' Family valves listed below containing NBR seals are also available with FKM seals.

Pipe Size NPT	Orifice Size (inch)	Cv Factor	Operating Pressure Differential (PSI) Min.	Maximum AC Ratings 10 watt	Maximum AC Ratings 22 watt	Maximum DC Ratings 10 watt	Maximum DC Ratings 22 watt	MAX.* Fluid Temp. (F)	Pressure Vessel Number	UL/CSA** Approval	Const. Ref.
1/8"	3/64	0.05	0	400		400		185	71295SN1ENJ1	GP	7
	1/16	0.11	0	325		325		185	71295SN1GNJ1	GP	7
	3/32	0.15	0	250		250		185	71295SN1KNJ1	GP	7
1/4"	3/64	0.05	0	400		400		185	71295SN2ENJ1	GP	7
	1/16	0.11	0	325		325		185	71295SN2GNJ1	GP	7
	3/32	0.15	0	250		250		185	71295SN2KNJ1	GP	7

* *Maximum fluid temperatures are provided for Class F coils. Valves with FKM seals (letter "V" in 10th position of pressure vessel number) can be used at fluid temperatures up to 240°F on DC and 250°F on AC provided a Class H coil is used.*

***UL/CSA Approval Information: SS = Safety Shutoff GP = General Purpose Blank = Not Approved*
See page 136 for additional agency approval information.

DRAWINGS

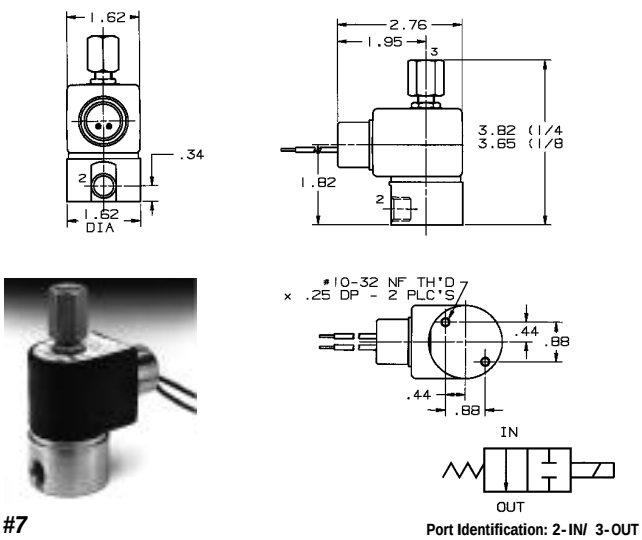

#7

Port Identification: 2-IN/ 3-OUT

7123 DIRECT ACTING STAINLESS STEEL VALVES – DUAL PURPOSE, NBR SEALS

'5' Family valves listed below containing NBR seals are also available with FKM seals.

Pipe Size NPT	Orifice Size (inch)	Cv Factor	Operating Pressure Differential (PSI) Min.	Maximum AC Ratings 10 watt	Maximum AC Ratings 22 watt	Maximum DC Ratings 10 watt	Maximum DC Ratings 22 watt	MAX.* Fluid Temp. (F)	Pressure Vessel Number	UL/CSA** Approval	Const. Ref.
1/8	1/32	0.02	0	400		400		185	71235SN1AN00	SS	100
	3/64	0.06	0	180		180		185	71235SN1EN00	SS	100
	1/16	0.1	0	110		110		185	71235SN1GN00	SS	100
	3/32	0.17	0	70		70		185	71235SN1KN00	SS	100
	1/8	0.28	0	45		45		185	71235SN1MN00	SS	100
1/4	1/32	0.02	0	400		400		185	71235SN2AN00	SS	100
	3/64	0.06	0	180		180		185	71235SN2EN00	SS	100
	1/16	0.1	0	110		110		185	71235SN2GN00	SS	100
	3/32	0.17	0	70		70		185	71235SN2KN00	SS	100
	1/8	0.28	0	45		45		185	71235SN2MN00	SS	100

* *Maximum fluid temperatures are provided for Class F coils. Valves with FKM seals (letter "V" in 10th position of pressure vessel number) can be used at fluid temperatures up to 240°F on DC and 250°F on AC provided a Class H coil is used.*

** *UL/CSA Approval Information: SS=Safety Shutoff GP=General Purpose Blank=Not Approved See page 136 for additional agency approval information.*

DRAWINGS

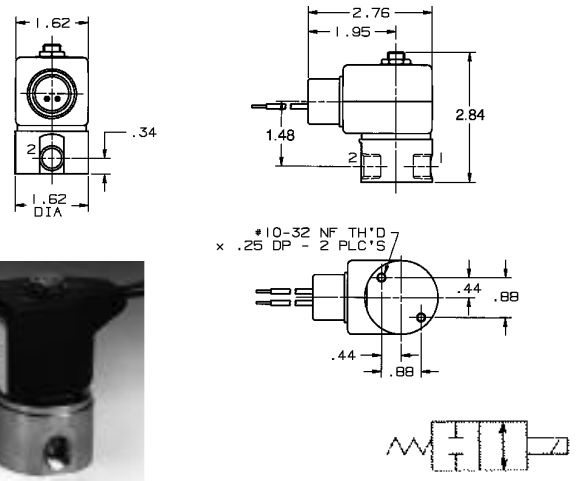

#100

Port Identification: Pressure can be applied to either port.

SPECIFICATIONS

Mechanical Characteristics

Standard Materials of Construction

- Body–Brass or Stainless Steel (316 or 430F)
- Seals–NBR, FKM as listed
- Sleeve Tube–Stainless Steel (303 or 304)
- Plunger–Stainless Steel (430FR)
- Stop–Stainless Steel (430FR)
- Springs–Stainless Steel (18-8)
- Shading Ring–Copper
- Pilot Orifice–Stainless Steel (303)

Compatible Fluids

- Lubricated Air, Non-Lubricated Air, Inert Gases, Water, Hydraulic Fluids, Petroleum Products and additional fluids compatible with materials of construction. Use of non-lubricated gaseous media will substantially limit valve life.

Electrical Characteristics

Voltages

- DC–12, 24
- AC–24/60, 110/50-120/60, 208/60, 220/50-240/60, 440/50-480/60 (other AC/DC voltages available upon request)

Power Consumption

- 10, 22 watts
- Fluxtron* Electronic Coils and Magnelatch

Agency Approvals

- UL and CSA approvals are available on valves with applicable coil/enclosure combinations. For additional information see page 136.

Miscellaneous

Maximum Ambient Temperature

- 10 watt AC/DC–150°F
- 22 watt AC/DC–77°F
- Fluxtron*/Magnelatch–122°F

* Fluxtron coils not for use on direct lift valves.

7221 DIRECT LIFT BRASS VALVES – NORMALLY CLOSED, NBR SEALS

'8' and 'G' Family valves listed below are also available in FKM Seals.

Pipe Size NPT	Orifice Size (inch)	Cv Factor	Operating Pressure Differential (PSI) Min.*	Maximum AC Ratings 10 watt	Maximum AC Ratings 22 watt	Maximum DC Ratings 10 watt	Maximum DC Ratings 22 watt	MAX.** Fluid Temp. (F)	Pressure Vessel Number	UL/CSA*** Approval	Const. Ref.
3/8"	5/8	3.0	0	100			40	185	72218BN3TN00	SS	8
	19/32	4.4	0	230			100	185	7221GBN3VN00	SS	9
1/2"	5/8	4.0	0	100			40	185	72218BN4UN00	SS	8
	19/32	4.4	0	230			100	185	7221GBN4VN00	SS	9
3/4"	3/4	5.0	0	100			40	185	72218BN5VN00	SS	8
	19/32	5.5	0	230			100	185	7221GBN51N00	SS	9
1"	19/32	5.5	0	230			100	185	7221GBN61N00	SS	9
	1	11.7	0	230			85	185	7221GBN64N00	SS	9

7221 DIRECT LIFT STAINLESS STEEL VALVES – NORMALLY CLOSED, FKM SEALS

Pipe Size NPT	Orifice Size (inch)	Cv Factor	Operating Pressure Differential (PSI) Min.*	Maximum AC Ratings 10 watt	Maximum AC Ratings 22 watt	Maximum DC Ratings 10 watt	Maximum DC Ratings 22 watt	MAX.*** Fluid Temp. (F)	Pressure Vessel Number	UL/CSA** Approval	Const. Ref.
3/8"	5/8	3.0	0	100			40	185	72218RN3TV00	SS	8
1/2"	5/8	4.0	0	100			40	185	72218RN4UV00	SS	8
3/4"	3/4	5.0	0	100			40	185	72218RN5VV00	SS	8

* *Direct lift valves will open at zero differential pressure, however full flow through the valve will not be safely achieved. If full flow is required at zero differential pressure, consult Skinner.*

** *Maximum fluid temperatures are provided for Class F coils. Valves with FKM seals (letter "V" in 10th position of pressure vessel number) can be used at fluid temperatures up to 240°F on DC and 250°F on AC provided a Class H coil is used.*

*** *UL/CSA Approval Information: SS=Safety Shutoff GP=General Purpose Blank=Not Approved See page 136 for additional agency approval information.*

DRAWINGS

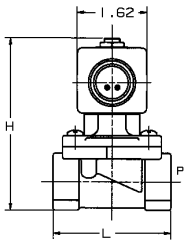

Valve	Dimension H	P	C	L
72218BN3TXXX	3.78	3.23	2.21	2.64
72218BN4UXXX	3.78	3.23	2.21	2.64
72218BN5VXXX	3.99	3.33	2.31	2.72
72218RN3TXXX	3.99	3.33	2.31	2.72
72218RN4UXXX	3.99	3.33	2.31	2.72
72218RN5VXXX	3.99	3.33	2.31	2.72

"X" denotes multiple digit combinations for brevity.

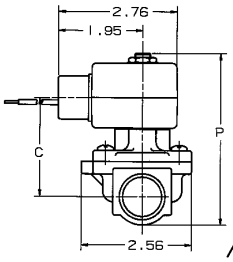

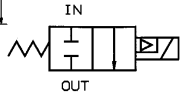

#8

Port Identification: P-IN/ - -OUT

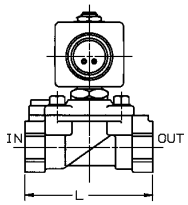

Valve	Dimension H	P	C	L	W
7221GBN3VXXX	3.66	3.07	2.06	2.95	2.09
7221GBN4VXXX	3.66	3.07	2.06	2.95	2.09
7221GBN51XXX	3.75	3.07	2.06	3.15	2.09
7221GBN61XXX	4.03	3.15	2.12	3.35	2.09
7221GBN64XXX	4.25	3.35	2.34	3.94	2.75

"X" denotes multiple digit combinations for brevity.

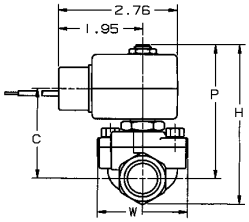

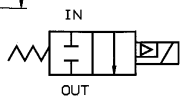

#9

Port Identification: Flow arrow on body indicates flow direction– ports are not marked.

7222 DIRECT LIFT BRASS VALVES – NORMALLY OPEN, FKM SEALS

Pipe Size NPT	Orifice Size (inch)	Cv Factor	Operating Pressure Differential (PSI) Min.*	Maximum AC Ratings 10 watt	Maximum AC Ratings 22 watt	Maximum DC Ratings 10 watt	Maximum DC Ratings 22 watt	MAX.** Fluid Temp. (F)	Pressure Vessel Number	UL/CSA*** Approval	Const. Ref.
3/8"	5/8	3.0	0	125+			125	185	72228BN3TV00	GP	102
1/2"	5/8	4.0	0	125+			125	185	72228BN4UV00	GP	102
3/4"	3/4	5.0	0	125+			125	185	72228BN5VV00	GP	102

* *Direct lift valves will open at zero differential pressure, however full flow through the valve will not be safely achieved. If full flow is required at zero differential pressure, consult Skinner.*

** *Maximum fluid temperatures are provided for Class F coils. Valves with FKM seals (letter "V" in 10th position of pressure vessel number) can be used at fluid temperatures up to 240°F on DC and 250°F on AC provided a Class H coil is used.*

*** *UL/CSA Approval Information: SS=Safety Shutoff GP=General Purpose Blank=Not Approved See page 136 for additional agency approval information.*

\+ *Rating suitable for all 22 watt integrated coils except D300 DIN coil. Consult Skinner Valve for application review.*

DRAWINGS

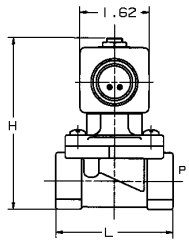

Valve	Dimension H	P	C	L
72228BN3TXXX	4.04	3.49	2.43	2.64
72228BN4UXXX	4.04	3.49	2.43	2.64
72228BN5VXXX	4.24	3.58	2.52	2.72
72228RN3TXXX	4.04	3.49	2.43	2.64
72228RN4UXXX	4.04	3.49	2.43	2.64
72228RN5VXXX	4.24	3.58	2.52	2.72

"X" denotes multiple digit combinations for brevity.

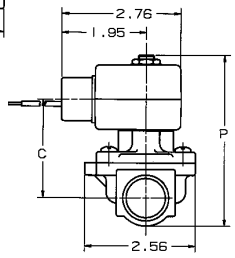

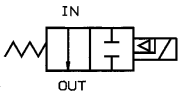

#102

Port Identification: P-IN/ - -OUT

7222 DIRECT LIFT STAINLESS STEEL VALVES – NORMALLY OPEN, FKM SEALS

Pipe Size NPT	Orifice Size (inch)	Cv Factor	Operating Pressure Differential (PSI) Min.*	Maximum AC Ratings 10 watt	Maximum AC Ratings 22 watt	Maximum DC Ratings 10 watt	Maximum DC Ratings 22 watt	MAX.** Fluid Temp. (F)	Pressure Vessel Number	UL/CSA*** Approval	Const. Ref.
3/8"	5/8	3.0	0	125+			125	185	72228RN3TV00	SS	102
1/2"	5/8	4.0	0	125+			125	185	72228RN4UV00	SS	102
3/4"	3/4	5.0	0	125+			125	185	72228RN5VV00	SS	102

7321 PILOT OPERATED BRASS VALVES – NORMALLY CLOSED, NBR SEALS

'K', '8' and 1/4" '2' Family valves also available with FKM seals

Pipe Size NPT	Orifice Size (inch)	Cv Factor	Operating Pressure Differential (PSI) Min.*	Maximum AC Ratings 10 watt	Maximum AC Ratings 22 watt	Maximum DC Ratings 10 watt	Maximum DC Ratings 22 watt	MAX.** Fluid Temp. (F)	Pressure Vessel Number	UL/CSA*** Approval	Const. Ref.
1/4"	1/4	0.76	5	300		300		185	73212BN2MN00	SS	10
	7/16	2.0	3	150		60	150	185	7321KBN2RN00	SS	98
3/8"	1/2	2.4	5	300		300		185	73212BN3SN00	SS	11
	5/8	3.0	5	150		150		185	73218BN3TN00	SS	12
	7/16	2.5	3	150		60	150	185	7321KBN3SN00	SS	98
1/2"	1/2	2.8	5	300		300		185	73212BN4TN00	SS	11
	5/8	4.0	5	150		150		185	73218BN4UN00	SS	12
	7/16	2.5	3	150		60	150	185	7321KBN4SN00	SS	98
3/4"	3/4	7.3	5	300		300		185	73212BN52N00	SS	13
	3/4	5.0	5	150		150		185	73218BN5VN00	SS	12
	25/32	9.6	5	230		230		185	7321GBN53N00	SS	14
1"	1	11.0	5	300		300		185	73212BN63N00	SS	13
	1 1/16	13.5	5	125		125		185	73218BN64N00	SS	15
	1	12.5	5	230		230		185	7321GBN64N00	SS	14
1 1/4"	1 1/8	15.0	5	125		125		185	73218BN75N00	SS	15
	1 1/8	19.3	5	230		230		185	7321GBN76N00	SS	14
1 1/2"	1 1/4	22.5	5	125		125		185	73218BN87N00	SS	16
	1 9/16	29.0	5	230		200	230	185	7321GBN88N00	SS	14
2"	1 9/16	38.6	5	230		200	230	185	7321GBN99N00	SS	14

7321 PILOT OPERATED STAINLESS STEEL VALVES – NORMALLY CLOSED, NBR SEALS

Pipe Size NPT	Orifice Size (inch)	Cv Factor	Operating Pressure Differential (PSI) Min.*	Maximum AC Ratings 10 watt	Maximum AC Ratings 22 watt	Maximum DC Ratings 10 watt	Maximum DC Ratings 22 watt	MAX.** Fluid Temp. (F)	Pressure Vessel Number	UL/CSA*** Approval	Const. Ref.
1/4"	1/4	0.76	5	300		300		185	73212SN2MN00	SS	17

* *Pilot operated valves require the minimum pressure differential specified for proper valve operation.*

** *Maximum fluid temperatures are provided for Class F coils. Valves with FKM seals (letter "V" in 10th position of pressure vessel number) can be used at fluid temperatures up to 240°F on DC and 250°F on AC provided a Class H coil is used.*

*** *UL/CSA Approval Information: SS=Safety Shutoff GP=General Purpose Blank=Not Approved*
See page 136 for additional agency approval information.
1/4"-'2' Family SS valve also available with FKM seals.

DRAWINGS

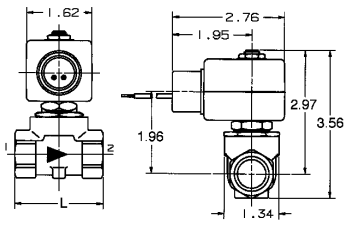

Valve	Dimension H	P	C	L
7321KBN4SXXX	3.56	2.97	1.96	2.17
7321KBN2RXXX	3.56	2.97	1.96	1.97
7321KBN3SXXX	3.56	2.97	1.96	1.97

"X" denotes multiple digit combinations for brevity.

Flow arrow on body indicates flow direction – ports are not marked.

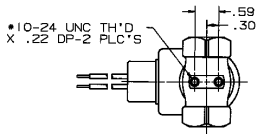

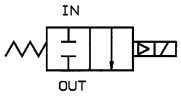

#98

Port Identification: 1-IN/ 2-OUT

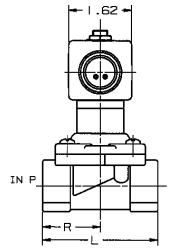

Valve	Dimension H	P	C	L	R
73218BN3TXXX	4.38	3.84	2.81	2.64	1.39
73218BN4UXXX	4.38	3.84	2.81	2.64	1.39
73218BN5VXXX	4.59	3.94	2.91	2.72	1.43

"X" denotes multiple digit combinations for brevity.

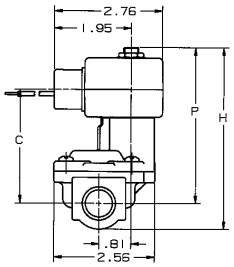

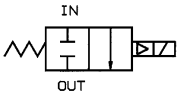

#12

Port Identification: P-IN/ - -OUT

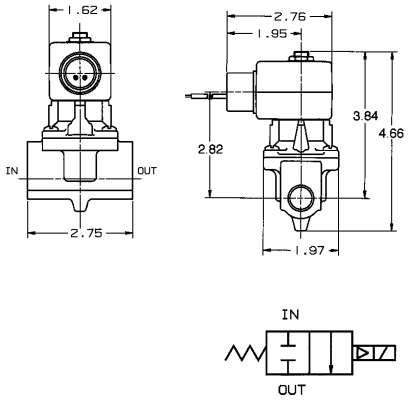

#11

Port Identification: IN-IN/ OUT-OUT

Valve	Dimension H	P	C
73218BN64XXX	5.45	4.59	3.57
73218BN75XXX	5.74	2.97	1.96

"X" denotes multiple digit combinations for brevity.

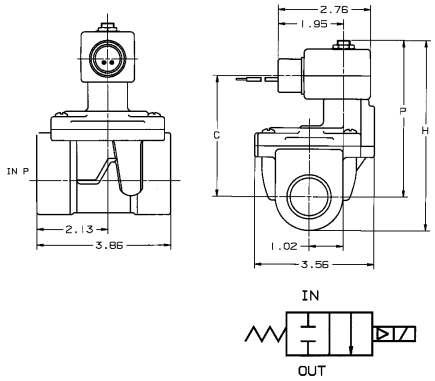

#15

Port Identification: P-IN/ - -OUT

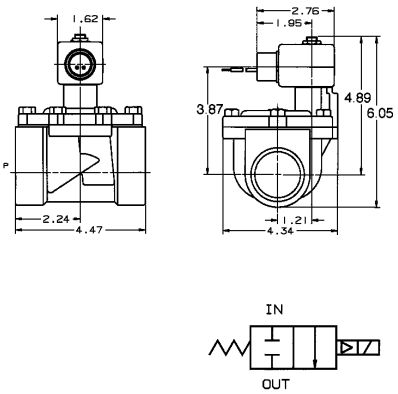

#16

Port Identification: P-IN/ - -OUT

Valve	Dimension H	P	C	L	W
7321GBN53XXX	4.75	3.86	2.84	3.94	2.75
7321GBN64XXX	4.75	3.86	2.84	3.94	2.75
7321GBN76XXX	5.41	4.11	3.09	4.33	2.75
7321GBN88XXX	5.66	4.37	3.35	5.51	3.90
7321GBN99XXX	6.25	4.60	3.58	5.91	3.90

"X" denotes multiple digit combinations for brevity.

Flow arrow on body indicates flow directio n–ports are not marked.

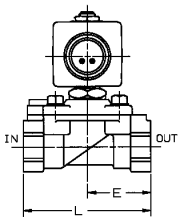

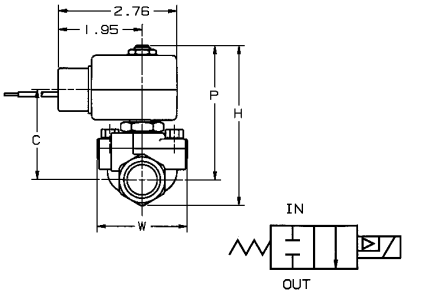

#14

Port Identification: P-IN/ - -OUT

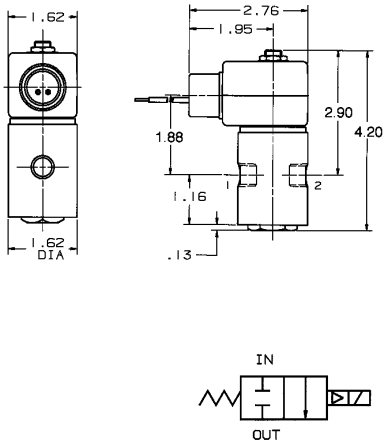

#17

Port Identification: 2-IN/ 1-OUT

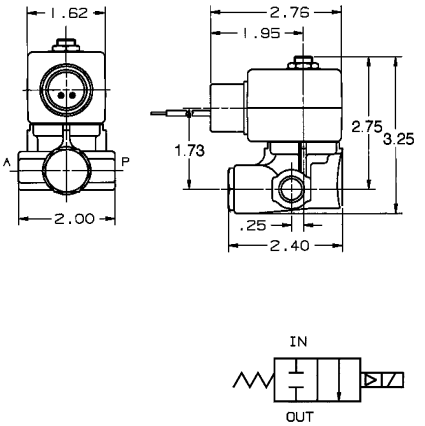

#10

Port Identification: P-IN/ A-OUT

Valve	Dimension H	P	C	L	W	Port Identification IN	OUT
73212BN52N00	5.81	4.62	3.59	3.62	3.09	IN	OUT
73212BN63N00	6.22	4.89	3.87	4.31	3.45	P	A

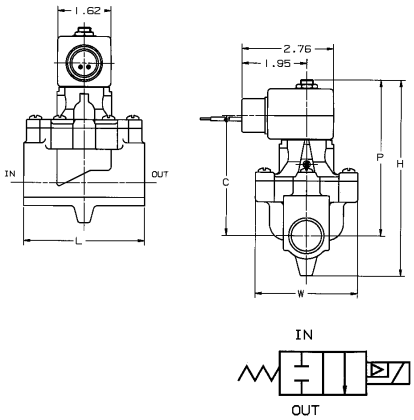

#13

7321 PILOT OPERATED BRASS TIMER DRAIN VALVES–NORMALLY CLOSED, FKM SEALS

Pipe Size NPT	Orifice Size (inch)	Cv Factor	Operating Pressure Differential (PSI) Min.*	Maximum AC Ratings 10 watt	Maximum AC Ratings 22 watt	Maximum DC Ratings 10 watt	Maximum DC Ratings 22 watt	MAX. Fluid Temp. (F)	Pressure Vessel Number	UL/CSA** Approval	Const. Ref.
1/4”	7/16	1.75	3	300		45		210	7321KBY61640	SS	18
3/8”	7/16	2.5	3	300		45		210	7321KBY63200	SS	18
1/2”	7/16	2.7	3	300		45		210	7321KBY6320A	SS	18

* *Pilot operated valves require the minimum pressure differential specified for proper valve operation.*

** *UL/CSA Approval Information: SS=Safety Shutoff GP=General Purpose Blank=Not Approved*

See page 136 for additional agency approval information.

NOTE: See Electrical options section on page 135 for timers available for these valves. These valves are rated for intermittent duty cycle applications only.

DRAWINGS

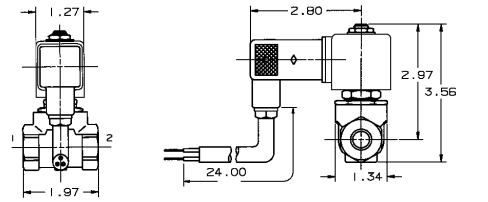

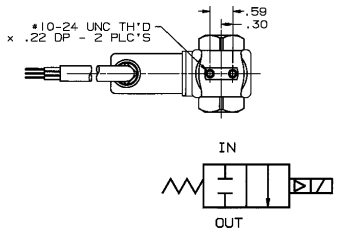

Port Identification: Flow arrow on body indicates flow direction–ports are not marked.

#18

7322 PILOT OPERATED BRASS VALVES– NORMALLY OPEN, NBR SEALS

'8' and 1/4" '2' Family valves listed below are also available in FKM Seals.

Pipe Size NPT	Orifice Size (inch)	Cv Factor	Operating Pressure Differential (PSI) Min.*	Maximum AC Ratings 10 watt	Maximum AC Ratings 22 watt	Maximum DC Ratings 10 watt	Maximum DC Ratings 22 watt	MAX.** Fluid Temp. (F)	Pressure Vessel Number	UL/CSA*** Approval	Const. Ref.
1/4"	1/4	0.76	5	200		200		185	73222BN2MN00	GP	104
3/8"	1/2	2.4	5	200		200		185	73222BN3SN00	GP	105
	5/8	3.0	5	150		150		185	73228BN3TN00	GP	106
1/2"	1/2	2.8	5	200		200		185	73222BN4TN00	GP	105
	5/8	4.0	5	150		150		185	73228BN4UN00	GP	106
3/4"	3/4	7.3	5	200		200		185	73222BN52N00	GP	107
	3/4	5.0	5	150		150		185	73228BN5VN00	GP	106
	25/32	9.6	5	230		230		185	7322GBN53N00	GP	108
1"	1	11.0	5	200		200		185	73222BN63N00	GP	107
	1 1/16	13.5	5	125		125		185	73228BN64N00	GP	110
	1	12.5	5	230		230		185	7322GBN64N00	GP	108
1 1/4"	1 1/8	15.0	5	125		125		185	73228BN75N00	GP	110
	1 1/8	19.3	5	230		230		185	7322GBN76N00	GP	108
1 1/2"	1 1/4	22.5	5	125		125		185	73228BN87N00	GP	111
	1 9/16	29.0	5	170		170		185	7322GBN88N00	GP	108
2"	1 9/16	38.6	5	170		170		185	7322GBN99N00	GP	108

7322 PILOT OPERATED STAINLESS STEEL VALVES–NORMALLY OPEN, NBR SEAL

Pipe Size NPT	Orifice Size (inch)	Cv Factor	Operating Pressure Differential (PSI) Min.*	Maximum AC Ratings 10 watt	Maximum AC Ratings 22 watt	Maximum DC Ratings 10 watt	Maximum DC Ratings 22 watt	MAX.** Fluid Temp. (F)	Pressure Vessel Number	UL/CSA*** Approval	Const. Ref.
1/4"	1/4	0.76	5	200		200		185	73222SN2MN00	SS	112

* *Pilot operated valves require the minimum pressure differential specified for proper valve operation.*

** *Maximum fluid temperatures are provided for Class F coils. Valves with FKM seals (letter "V" in 10th position of pressure vessel number) can be used at fluid temperatures up to 240°F on DC and 250°F on AC provided a Class H coil is used.*

*** *UL/CSA Approval Information: SS=Safety Shutoff GP=General Purpose Blank=Not Approved See page 136 for additional agency approval information.*

1/4"– '2' Family valves listed are also available with FKM seals.

DRAWINGS

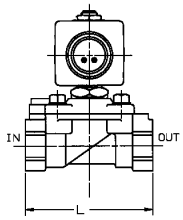

Valve	Dimension H	P	C	L	W
7322GBN53XXX	4.75	3.86	2.84	3.94	2.75
7322GBN64XXX	4.75	3.86	2.84	3.94	2.75
7322GBN76XXX	5.41	4.11	3.09	4.33	2.75
7322GBN88XXX	5.66	4.37	3.35	5.51	3.90
7322GBN99XXX	6.25	4.60	3.58	5.91	3.90

"X" denotes multiple digit combinations for brevity.

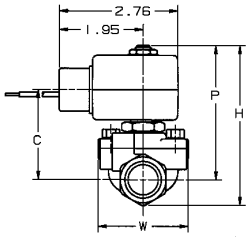

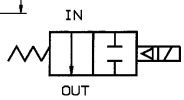

Port Identification: Flow arrow on body indicates flow direction– ports are not marked.

#108

Valve	Dimension H	P	C	L	R
73228BN3TXXX	4.62	4.07	3.01	2.64	1.39
73228BN4UXXX	4.62	4.07	3.01	2.64	1.39
73228BN5VXXX	4.83	4.17	3.11	2.72	1.43

"X" denotes multiple digit combinations for brevity.

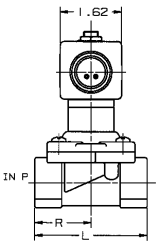

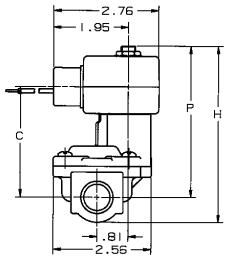

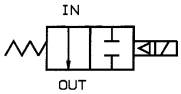

#106

Port Identification: P-IN/ - - OUT

Valve	Dimension H	P	C
73228BN64XXX	5.69	4.83	3.77
73228BN75XXX	5.97	4.97	3.91

"X" denotes multiple digit combinations for brevity.

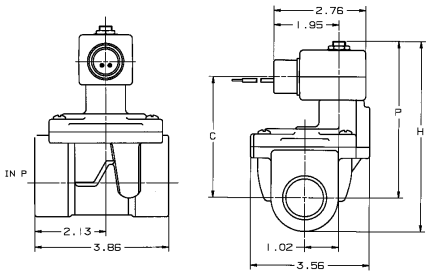

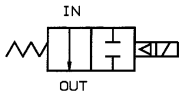

#110

Port Identification: P-IN/ - -OUT

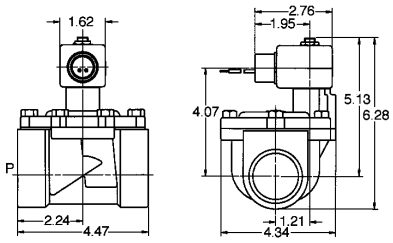

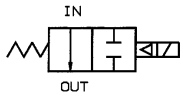

#111

Port Identification: P-IN/ - -OUT

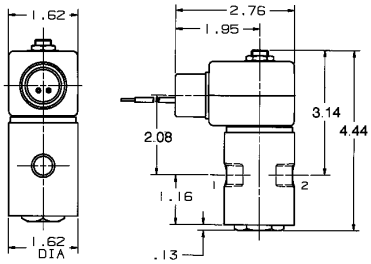

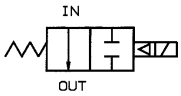

#112

Port Identification: 2-IN/ 1-OUT

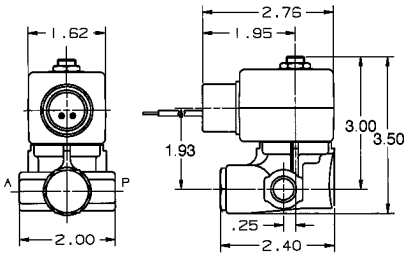

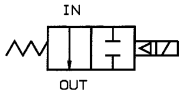

#104

Port Identification: P-IN/ A-OUT

Valve	Dimension H	P	C	L	W	Port Identification IN	OUT
73222BN52N00	6.04	4.85	3.79	3.62	3.09	IN	OUT
73222BN63N00	6.46	5.13	4.07	4.31	3.45	P	A

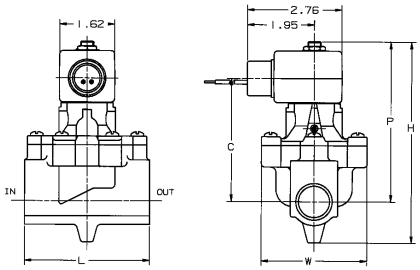

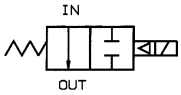

#107

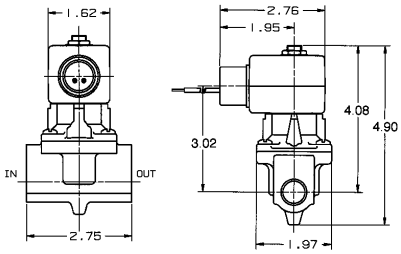

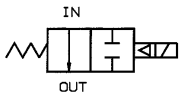

#105

Port Identification: IN-IN/ OUT-OUT

7423 PILOT OPERATED BRASS VALVES – DUAL PURPOSE, NBR SEALS

Pipe Size NPT	Orifice Size (inch)	Cv Factor	Operating Pressure Differential (PSI) Min.*	Maximum AC Ratings 10 watt	Maximum AC Ratings 22 watt	Maximum DC Ratings 10 watt	Maximum DC Ratings 22 watt	MAX.* Fluid Temp. (F)	Pressure Vessel Number	UL/CSA** Approval	Const. Ref.
3/8”	1/2	2.4	0	150		150		185	74232BN3SNJ1	GP	19
1/2”	1/2	2.8	0	150		150		185	74232BN4TNJ1	GP	19
3/4”	3/4	7.3	0	150		150		185	74232BN52NJ1	GP	20
1”	1	11.0	0	150		150		185	74232BN63NJ1	GP	20

* *Maximum fluid temperatures are provided for Class F coils. Valves with FKM seals (letter ‘V’ in 10th position of pressure vessel number) can be used at fluid temperatures up to 240°F on DC and 250°F on AC provided a Class H coil is used.*
Note: External Pilot Pressure valves require a minimum external pilot pressure equal to the main line pressure plus 10 PSI. Maximum external pilot pressure is 145 PSI for vacuum applications, and 160 PSI for pressure applications.
Pressure ratings may be reduced, however. Consult factory for details.
***UL/CSA Approval information: SS=Safety Shutoff GP=General Purpose*
BLANK = Not Approved
See page 136 for additional agency approval information.

DRAWINGS

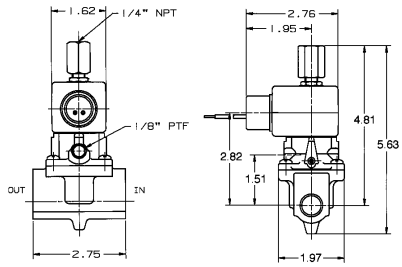

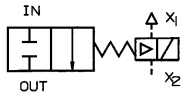

NORMALLY CLOSED

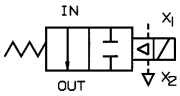

NORMALLY OPEN

Port Identification: IN-IN/ OUT-OUT

Note: Valve may be normally closed or normally open, depending on piping of external pilot.

#19

Valve	Dimension H	P	C	L	W	S	Port Identification IN	OUT
74232BN52NJ1	6.78	5.59	3.59	3.62	3.09	2.28	IN	OUT
74232BN63NJ1	7.19	5.86	3.87	4.31	3.45	2.56	P	A

Valve can be normally closed or normally open, depending on piping of external pilot.

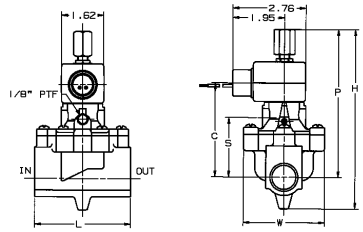

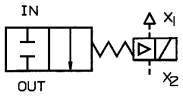

NORMALLY CLOSED

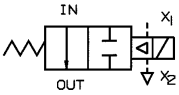

NORMALLY OPEN

#20

SKINNER 7000 Series Hot Water and Steam Two-Way, Direct Acting, Direct Lift and Pilot Operated Valves

SPECIFICATIONS

Mechanical Characteristics

Standard Materials of Construction

- Body– Brass or Stainless Steel (316 or 430F)
- Seals– PTFE, EPDM as listed
- Sleeve Tube– Stainless Steel (303 or 304)
- Plunger– Stainless Steel (430FR)
- Piston– Brass
- Piston Seal– PTFE Composite
- Piston Guide– Teflon Composite
- Stop– Stainless Steel (430FR)
- Springs– Stainless Steel (18-8 or 17-7PH))
- Shading Ring– Copper

Compatible Fluids

- Steam to 353°F, Hot Water to 210°F

Electrical Characteristics

Voltages

- DC– 12, 24
- AC– 24/60, 110/50-120/60, 208/60, 220/50-240/60, 440/50-480/60 (other AC/DC voltages available upon request)

Power Consumption

- 10, 22 watts
- Fluxtron* Electronic Coils and Magnelatch

Agency Approvals

- UL and CSA approvals are available on valves with applicable coil/enclosure combinations. For additional information see page 136.

Miscellaneous

Maximum Ambient Temperature

- 10 watt AC/DC– 150°F(-E00 valves), 122°F (-ES0 valves), 77°F(-TS0 valves)
- 22 watt AC/DC– 77°F
- Fluxtron*/Magnelatch– 122°F

Fluxtron coils not suitable for use on direct lift valves. Fluxtron and Magnelatch coils not suitable for use on valves rated for steam service (S0).

Valves with 'S0' in last two digits of pressure vessel number are rated for steam applications.

DIRECT ACTING BRASS VALVES–NORMALLY CLOSED, EPDM SEALS

Pipe Size NPT	Orifice Size (inch)	Cv Factor	Operating Pressure Differential (PSI) Min.*	Maximum AC Ratings 10 watt	Maximum AC Ratings 22 watt	Maximum DC Ratings 10 watt	Maximum DC Ratings 22 watt	MAX. Fluid Temp. (F)	Pressure** Vessel Number	UL/CSA*** Approval	Const. Ref.
1/4	13/64	0.76	0	100		40	100	210	7121KBN2SE00	GP	2
	13/64	0.76	0	40			40	285	7121KBN2SES0	GP	2

DIRECT LIFT BRASS VALVES–NORMALLY CLOSED, EPDM SEALS

Pipe Size NPT	Orifice Size (inch)	Cv Factor	Operating Pressure Differential (PSI) Min.*	Maximum AC Ratings 10 watt	Maximum AC Ratings 22 watt	Maximum DC Ratings 10 watt	Maximum DC Ratings 22 watt	MAX. Fluid Temp. (F)	Pressure** Vessel Number	UL/CSA*** Approval	Const. Ref.
3/8"	5/8	3.0	0	100			40	210	72218BN3TE00	GP	8
	5/8	3.0	0	50				297	72218BN3TES0	GP	8
	19/32	4.4	0	150			100	210	7221GBN3VE00	GP	9
	19/32	4.4	0	45			45	293	7221GBN3VES0	GP	9
1/2"	5/8	4.0	0	100			40	210	72218BN4UE00	GP	8
	5/8	4.0	0	50				297	72218BN4UES0	GP	8
	19/32	4.4	0	150			100	210	7221GBN4VE00	GP	9
	19/32	4.4	0	45			45	293	7221GBN4VES0	GP	9
3/4"	3/4	5.0	0	100			40	210	72218BN5VE00	GP	8
	3/4	5.0	0	50				297	72218BN5VES0	GP	8
	19/32	5.5	0	150			100	210	7221GBN51E00	GP	9
	19/32	5.5	0	45			45	293	7221GBN51ES0	GP	9
1"	19/32	5.5	0	150			100	210	7221GBN61E00	GP	9
	19/32	5.5	0	45			45	293	7221GBN61ES0	GP	9
	1	11.7	0	150			100	210	7221GBN64E00	GP	9
	1	11.7	0	45			45	293	7221GBN64ES0	GP	9

DIRECT LIFT STAINLESS STEEL VALVES– NORMALLY CLOSED, EPDM SEALS

Pipe Size NPT	Orifice Size (inch)	Cv Factor	Operating Pressure Differential (PSI) Min.*	Maximum AC Ratings 10 watt	Maximum AC Ratings 22 watt	Maximum DC Ratings 10 watt	Maximum DC Ratings 22 watt	MAX. Fluid Temp. (F)	Pressure** Vessel Number	UL/CSA*** Approval	Const. Ref.
3/8”	5/8	3.0	0	100			40	210	72218RN3TE00	GP	8
	5/8	3.0	0	50				297	72218RN3TES0	GP	8
1/2”	5/8	4.0	0	100			40	210	72218RN4UE00	GP	8
	5/8	4.0	0	50				297	72218RN4UES0	GP	8
3/4”	3/4	5.0	0	100			40	210	72218RN5VE00	GP	8
	3/4	5.0	0	50				297	72218RN5VES0	GP	8

DIRECT LIFT BRASS VALVES – NORMALLY OPEN, EPDM SEALS

Pipe Size NPT	Orifice Size (inch)	Cv Factor	Operating Pressure Differential (PSI) Min.*	Maximum AC Ratings 10 watt	Maximum AC Ratings 22 watt	Maximum DC Ratings 10 watt	Maximum DC Ratings 22 watt	MAX. Fluid Temp. (F)	Pressure** Vessel Number	UL/CSA*** Approval	Const. Ref.
3/8”	5/8	3.0	0		125		125	210	72228BN3TE00	GP	102
	5/8	3.0	0	50				297	72228BN3TES0	GP	102
1/2”	5/8	4.0	0		125		125	210	72228BN4UE00	GP	102
	5/8	4.0	0	50				297	72228BN4UES0	GP	102
3/4”	3/4	5.0	0		125		125	210	72228BN5VE00	GP	102
	3/4	5.0	0	50				297	72228BN5VES0	GP	102

DIRECT LIFT STAINLESS STEEL VALVES – NORMALLY OPEN, EPDM SEALS

Pipe Size NPT	Orifice Size (inch)	Cv Factor	Operating Pressure Differential (PSI) Min.*	Maximum AC Ratings 10 watt	Maximum AC Ratings 22 watt	Maximum DC Ratings 10 watt	Maximum DC Ratings 22 watt	MAX. Fluid Temp. (F)	Pressure** Vessel Number	UL/CSA*** Approval	Const. Ref.
3/8”	5/8	3.0	0		125		125	210	72228RN3TE00	GP	102
	5/8	3.0	0	50				297	72228RN3TES0	GP	102
1/2”	5/8	4.0	0		125		125	210	72228RN4UE00	GP	102
	5/8	4.0	0	50				297	72228RN4UES0	GP	102
3/4”	3/4	5.0	0		125		125	210	72228RN5VE00	GP	102
	3/4	5.0	0	50				297	72228RN5VES0	GP	102

PILOT OPERATED BRASS VALVES – NORMALLY CLOSED, EPDM OR PTFE SEALS

Pipe Size NPT	Orifice Size (inch)	Cv Factor	Operating Pressure Differential (PSI) Min.*	Maximum AC Ratings 10 watt	Maximum AC Ratings 22 watt	Maximum DC Ratings 10 watt	Maximum DC Ratings 22 watt	MAX. Fluid Temp. (F)	Pressure** Vessel Number	UL/CSA*** Approval	Const. Ref.
1/4”	7/16	2.0	3	150		60	150	210	7321KBN2RE00	GP	98
	7/16	2.0	3	45			45	293	7321KBN2RES0	GP	98
3/8”	5/8	3.0	5	150		150		210	73218BN3TE00	GP	12
	5/8	3.0	5	50		50		297	73218BN3TES0	GP	12
	5/8	3.0	3	125				353	73218BN3TTS0	GP	21
	7/16	2.5	3	150		60	150	210	7321KBN3SE00	GP	98
	7/16	2.5	3	45			45	293	7321KBN3SES0	GP	98
1/2”	5/8	4.0	5	150		150		210	73218BN4UE00	GP	12
	5/8	4.0	5	50		50		297	73218BN4UES0	GP	12
	5/8	4.0	3	125				353	73218BN4UTS0	GP	21
	7/16	2.5	3	150		60	150	210	7321KBN4SE00	GP	98
	7/16	2.5	3	45			45	293	7321KBN4SES0	GP	98
3/4”	3/4	5.0	5	150		150		210	73218BN5VE00	GP	12
	3/4	5.0	5	50		50		297	73218BN5VES0	GP	12
	5/8	4.5	3	125				353	73218BN5VTS0	GP	21
1”	1 1/16	13.5	5	125		125		210	73218BN64E00	GP	15
	1 1/16	13.5	5	50		50		297	73218BN64ES0	GP	15
	1 1/16	13.5	5	125				353	73218BN64TS0	GP	22
1 1/4”	1 1/8	15.0	5	125		125		210	73218BN75E00	GP	15
	1 1/8	15.0	5	50		50		297	73218BN75ES0	GP	15
	1 1/8	16.0	5	125				353	73218BN75TS0	GP	22
1 1/2”	1 1/4	22.5	5	125		125		210	73218BN87E00	GP	16
	1 1/4	22.5	5	50		50		297	73218BN87ES0	GP	16
	1 1/4	22.5	5	125				353	73218BN87TS0	GP	23

PILOT OPERATED BRASS VALVES – NORMALLY OPEN, PTFE SEALS

Pipe Size NPT	Orifice Size (inch)	Cv Factor	Operating Pressure Differential (PSI) Min.*	Maximum AC Ratings 10 watt	Maximum AC Ratings 22 watt	Maximum DC Ratings 10 watt	Maximum DC Ratings 22 watt	MAX. Fluid Temp. (F)	Pressure** Vessel Number	UL/CSA*** Approval	Const. Ref.
3/8”	5/8	3.0	5	125				353	73228BN3TTS0	GP	21
1/2”	5/8	4.0	5	125				353	73228BN4UTS0	GP	21
3/4”	3/4	7.5	5	125				353	73228BN52TS0	GP	21
1”	1 1/16	13.5	5	125				353	73228BN64TS0	GP	22
1 1/4”	1 1/8	16.0	5	125				353	73228BN75TS0	GP	22
1 1/2”	1 1/4	22.5	5	125				353	73228BN87TS0	GP	23

* *Direct lift valves will open at zero differential pressure, however, full flow through the valve will not be safely achieved. If full flow is required at near zero differential pressure, consult Skinner. Pilot operated valves require the minimum pressure differential specified for proper valve operation.*

** *Class H coils are required on steam valves with PTFE seals which are identified by the letters ‘TSO’ in the last three digits of the pressure vessel number. Class F coils can be used on all other steam and hot water valves.*

****UL/CSA Approval Information: SS=Safety Shutoff GP=General Purpose Blank=Not Approved*

See page 136 for additional agency information.

DRAWINGS

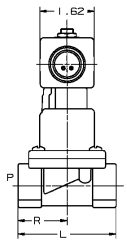

Valve	Dimension H	P	C	L	R
73218BN3TTS0	5.12	4.58	3.55	2.65	1.39
73218BN4UTS0	5.12	4.58	3.55	2.65	1.39
73218BN5VTS0	5.33	4.68	3.65	2.73	1.43
73228BN3TTS0	5.36	4.81	3.75	2.65	1.39
73228BN4UTS0	5.36	4.81	3.75	2.65	1.39
73228BN5VTS0	5.57	4.91	3.85	2.73	1.43

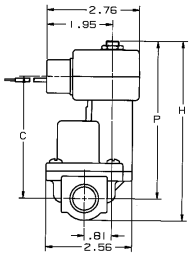

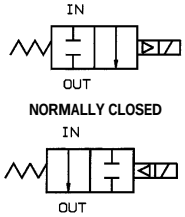

#21

Port Identification: P-IN/ - - OUT

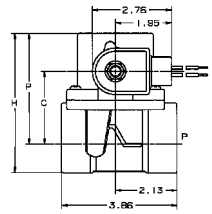

Valve	Dimension H	P	C	L	W	S
73218BN64TS0	4.56	3.70	2.38	5.58	3.96	2.94
73218BN75TS0	4.85	3.85	2.52	5.58	3.96	2.94
73228BN64TS0	4.56	3.70	2.38	5.82	4.20	3.14
73228BN75TS0	4.85	3.85	2.52	5.82	4.20	3.14

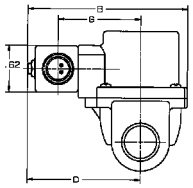

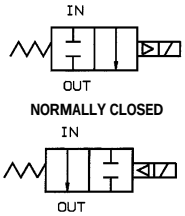

#22

Port Identification: P-IN/ - - OUT

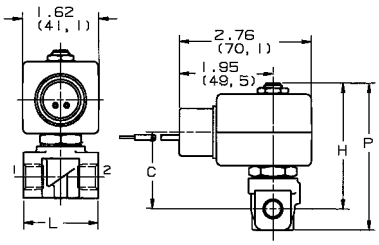

Valve	Dimension H	P	C	L
7121KBN1XXXX	2.63	3.07	1.61	1.57
7121KBN2XXXX	2.63	3.07	1.61	1.57
7121KBN3XXXX	2.57	3.08	1.55	1.97

“X” denotes multiple digit combinations for brevity.

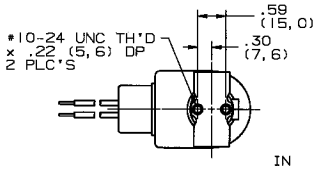

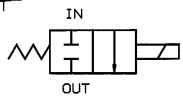

#2

Port Identification: 1-IN/ 2-OUT

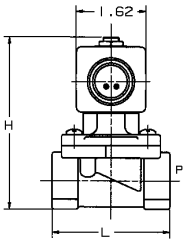

Valve	Dimension H	P	C	L
72218BN3TXXX	3.78	3.23	2.21	2.64
72218BN4UXXX	3.78	3.23	2.21	2.64
72218BN5VXXX	3.99	3.33	2.31	2.72
72218RN3TXXX	3.99	3.33	2.31	2.72
72218RN4UXXX	3.99	3.33	2.31	2.72
72218RN5VXXX	3.99	3.33	2.31	2.72

“X” denotes multiple digit combinations for brevity.

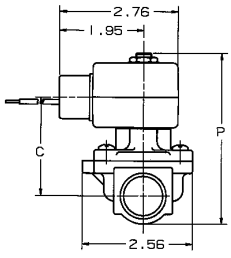

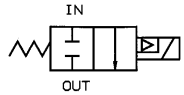

#8

Port Identification: P-IN/ - -OUT

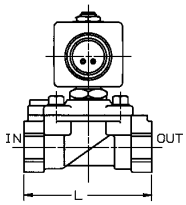

Valve	Dimension H	P	C	L	W
7221GBN3VXXX	3.66	3.07	2.06	2.95	2.09
7221GBN4VXXX	3.66	3.07	2.06	2.95	2.09
7221GBN51XXX	3.75	3.07	2.06	3.15	2.09
7221GBN61XXX	4.03	3.15	2.12	3.35	2.09
7221GBN64XXX	4.25	3.35	2.34	3.94	2.75

"X" denotes multiple digit combinations for brevity.

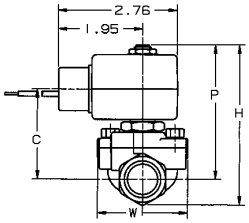

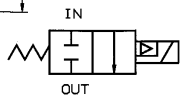

Port Identification: Flow arrow on body indicates flow direction– ports are not marked.

#9

DRAWINGS

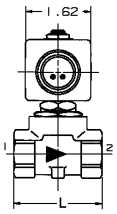

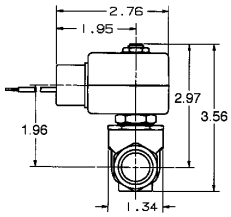

Valve	Dimension H	P	C	L
7321KBN4SXXX	3.56	2.97	1.96	2.17
7321KBN2RXXX	3.56	2.97	1.96	1.97
7321KBN3SXXX	3.56	2.97	1.96	1.97

"X" denotes multiple digit combinations for brevity.

Flow arrow on body indicates flow directio n– ports are not marked.

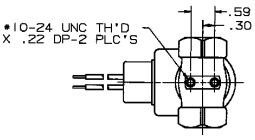

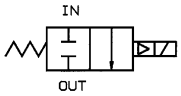

#98

Port Identification: 1-IN/ 2-OUT

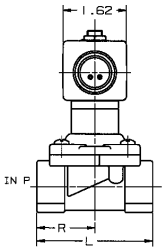

Valve	Dimension H	P	C	L	R
73218BN3TXXX	4.38	3.84	2.81	2.64	1.39
73218BN4UXXX	4.38	3.84	2.81	2.64	1.39
73218BN5VXXX	4.59	3.94	2.91	2.72	1.43

"X" denotes multiple digit combinations for brevity.

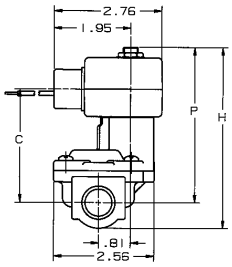

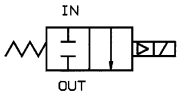

#12

Port Identification: P-IN/ - -OUT

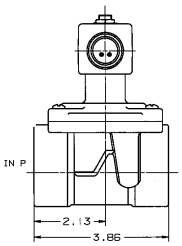

Valve	Dimension H	P	C
73218BN64XXX	5.45	4.59	3.57
73218BN75XXX	5.74	4.73	3.71

"X" denotes multiple digit combinations for brevity.

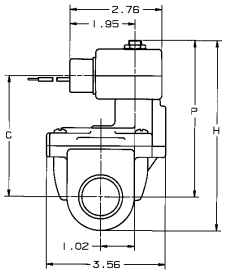

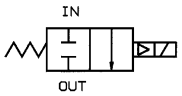

#15

Port Identification: P-IN/ - -OUT

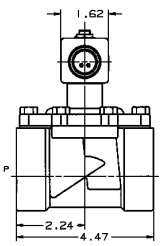

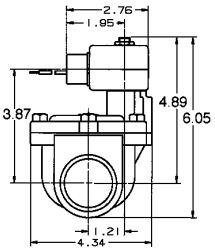

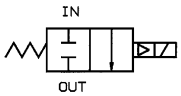

#16

Port Identification: P-IN/ - -OUT

Valve	Dimension B	D	G
73218BN87TS0	6.03	4.08	3.05
73228BN87TS0	6.27	4.32	3.25

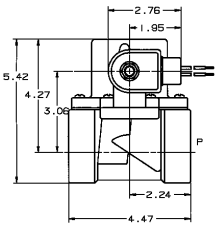

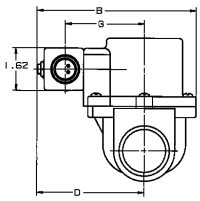

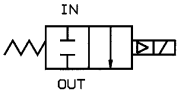

NORMALLY CLOSED

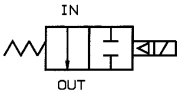

NORMALLY OPEN

#23

Port Identification: P-IN/ - - OUT

DRAWINGS

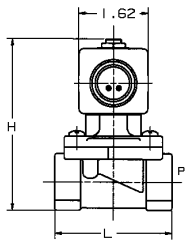

Valve	Dimension H	P	C	L
72228BN3TXXX	4.04	3.49	2.43	2.64
72228BN4UXXX	4.04	3.49	2.43	2.64
72228BN5VXXX	4.24	3.58	2.52	2.72
72228RN3TXXX	4.04	3.49	2.43	2.64
72228RN4UXXX	4.04	3.49	2.43	2.64
72228RN5VXXX	4.04	3.58	2.52	2.72

"X" denotes multiple digit combinations for brevity.

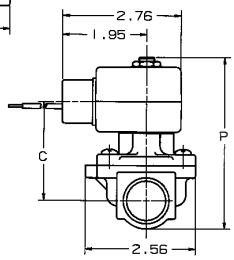

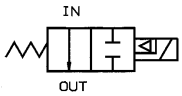

#102

Port Identification: P-IN/ - -OUT

Steam Valve Sizing

The following flow charts for saturated steam are based on a valve with a Cv factor = 1. To size valves for steam service ("SO" at end of catalog number), follow these steps:

1) Locate the known downstream pressure on the appropriate steam flow chart. From this point draw a horizontal line to intersect the known inlet pressure.

2) At this point draw a vertical line down to determine the corresponding steam flow (pounds per hour) for a valve with a Cv = 1.

3) Multiply this figure by the Cv factor listed in the catalog for a particular steam valve to determine the actual steam flow through the valve.

For hot water valves refer to page 129, Valve Sizing for Liquid Service.

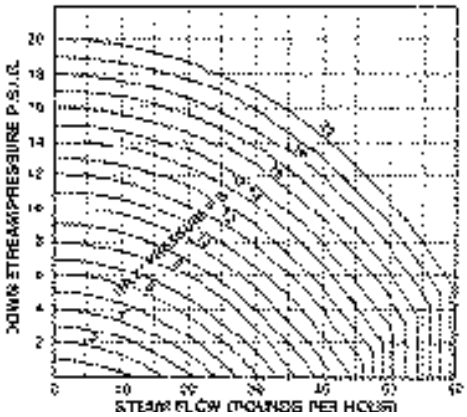

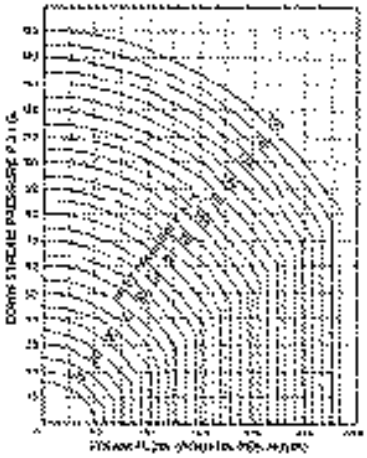

SKINNER 7000 Series High Pressure Two-Way Direct Acting and Pilot Operated Valves

SPECIFICATIONS

Mechanical Characteristics

Standard Materials of Construction

- Body– Brass or Stainless Steel (430F)
- Seals– FKM, PCTFE, PTFE, NBR, Nylon, Ruby as listed
- Sleeve Tube– Stainless Steel (303 or 304)
- Pilot Guide – Stainless Steel (303)
- Pilot Orifice– Stainless Steel (303)
- Piston– Stainless Steel (303)
- Plunger– Stainless Steel (430FR)
- Shading Ring– Copper
- Stop– Stainless Steel (430FR)
- Springs– Stainless Steel (18-8)

Compatible Fluids

- All common media including air, inert gases, hydraulic fluids, petroleum products, freons, water, steam and corrosive media. Use of non-lubricated gaseous media will substantially limit valve life.

Electrical Characteristics

Voltages

- DC– 12, 24
- AC– 24/60, 110/50-120/60, 208/60, 220/50-240/60, 440/50-480/60 (other AC/DC voltages available upon request)

Power Consumption

- 10, 22 watts
- Fluxtron* Electronic Coils and Magnelatch

Agency Approvals

- UL and CSA approvals are available on valves with applicable coil/enclosure combinations. For additional information see page 136.

Miscellaneous

Maximum Ambient Temperature

- 10 watt AC/DC – 150°F
- 22 watt AC/DC – 77°F
- Fluxtron*/Magnelatch – 122°F

DIRECT ACTING BRASS VALVES – NORMALLY CLOSED, PCTFE OR RUBY SEALS

Pipe Size NPT	Orifice Size (inch)	Cv Factor	Operating Pressure Differential (PSI) Min.*	Maximum AC Ratings 10 watt	Maximum AC Ratings 22 watt	Maximum DC Ratings 10 watt	Maximum DC Ratings 22 watt	MAX.** Fluid Temp. (F)	Pressure Vessel Number	UL/CSA*** Approval	Const. Ref.
1/8”	1/16	0.11	0	1000		435		165	7121KBN1GF00	GP	97
	3/32	0.24	0	500	725	175	320	210	7121KBN1LR00	GP	97
1/4”	1/16	0.11	0	1000		435		165	7121KBN2GF00	GP	97
	1/16	0.11	0	1100	1450	435	800	210	7121KBN2GR00	GP	97
	5/64	0.17	0	700	1030	260	460	210	7121KBN2JR00	GP	97
	3/32	0.24	0	500	725	175	320	210	7121KBN2LR00	GP	97
	1/8	0.31	0	365	525	125	220	210	7121KBN2NR00	GP	97

DIRECT ACTING STAINLESS STEEL VALVES – NORMALLY CLOSED, PCTFE, NYLON OR PTFE SEALS *(Flange Seal-NBR)*

Pipe Size NPT	Orifice Size (inch)	Cv Factor	Operating Pressure Differential (PSI) Min.*	Maximum AC Ratings 10 watt	Maximum AC Ratings 22 watt	Maximum DC Ratings 10 watt	Maximum DC Ratings 22 watt	MAX.** Fluid Temp. (F)	Pressure Vessel Number	UL/CSA*** Approval	Const. Ref.
1/8”	3/64	0.062	0	1000		520	1000	165	71215SN1EF00	GP	101
	1/16	0.095	0	700		350	700	165	71215SN1GF00	GP	101
	1/32	0.021	0	3000		2500	3000	185	71216SN1BL00	-	101
	3/64	0.037	0	1500		1000	1500	185	71216SN1FU00	GP	101
	1/16	0.070	0	1250		500	1000	185	71216SN1GL00	GP	101
	5/64	0.090	0	500		200	400	185	71216SN1JT00	GP	101
1/4”	3/64	0.062	0	1000		520	1000	165	71215SN2EF00	GP	101
	1/16	0.095	0	700		350	700	165	71215SN2GF00	GP	101
	1/32	0.021	0	3000		2500	3000	185	71216SN2BL00	-	101
	3/64	0.037	0	1500		1000	1500	185	71216SN2FU00	GP	101
	1/16	0.070	0	1250		500	1000	185	71216SN2GL00	GP	101
	5/64	0.090	0	500		200	400	185	71216SN2JT00	GP	101

DIRECT ACTING BRASS VALVES – NORMALLY OPEN, PCTFE OR RUBY SEALS

Pipe Size NPT	Orifice Size (inch)	Cv Factor	Operating Pressure Differential (PSI) Min.*	Maximum AC Ratings 10 watt	Maximum AC Ratings 22 watt	Maximum DC Ratings 10 watt	Maximum DC Ratings 22 watt	MAX.** Fluid Temp. (F)	Pressure Vessel Number	UL/CSA*** Approval	Const. Ref.
1/8”	1/16	0.11	0	435		435		165	7122KBN1GF00	GP	97
	1/8	0.28	0		435^			210	7122KBN1PR00	GP	97
1/4”	1/16	0.11	0	435		435		165	7122KBN2GF00	GP	97

DIRECT ACTING STAINLESS STEEL VALVES–NORMALLY OPEN, PCTFE SEALS

Pipe Size NPT	Orifice Size (inch)	Cv Factor	Operating Pressure Differential (PSI) Min.*	Maximum AC Ratings 10 watt	Maximum AC Ratings 22 watt	Maximum DC Ratings 10 watt	Maximum DC Ratings 22 watt	MAX.** Fluid Temp. (F)	Pressure Vessel Number	UL/CSA*** Approval	Const. Ref.
1/8”	3/64	0.054	0	750		750		165	71225SN1EF00	GP	101
	1/16	0.11	0	400		400		165	71225SN1GF00	GP	101
1/4”	3/64	0.054	0	750		750		165	71225SN2EF00	GP	101
	1/16	0.11	0	400		400		165	71225SN2GF00	GP	101

PILOT OPERATED BRASS VALVES–NORMALLY CLOSED, NBR, PTFE SEALS

‘H’ Family valves listed are also available in FKM. ‘H’ Family valves contain ruby plunger seal.

Pipe Size NPT	Orifice Size (inch)	Cv Factor	Operating Pressure Differential (PSI) Min.*	Maximum AC Ratings 10 watt	Maximum AC Ratings 22 watt	Maximum DC Ratings 10 watt	Maximum DC Ratings 22 watt	MAX.** Fluid Temp. (F)	Pressure Vessel Number	UL/CSA*** Approval	Const. Ref.
1/4”	1/4	0.76	5	1500		800	1500	210	73216BN2MT00	GP	10
	5/16	2.5	5	600		435	600	185	7321HBN2SN00	GP	24
3/8”	7/16	3.5	5	600		435	600	185	7321HBN3TN00	GP	24
1/2”	9/16	4.1	5	600		435	600	185	7321HBN4UN00	GP	24

PILOT OPERATED STAINLESS STEEL VALVES–NORMALLY CLOSED, PTFE SEALS

Pipe Size NPT	Orifice Size (inch)	Cv Factor	Operating Pressure Differential (PSI) Min.*	Maximum AC Ratings 10 watt	Maximum AC Ratings 22 watt	Maximum DC Ratings 10 watt	Maximum DC Ratings 22 watt	MAX.** Fluid Temp. (F)	Pressure Vessel Number	UL/CSA*** Approval	Const. Ref.
1/4”	1/4	0.76	5	1500		800	1500	210	73216SN2MT00	GP	17

PILOT OPERATED BRASS VALVES–NORMALLY OPEN, NBR SEALS

Valves are also available in FKM. ‘H’ Family valves contain Ruby plunger seals.

Pipe Size NPT	Orifice Size (inch)	Cv Factor	Operating Pressure Differential (PSI) Min.*	Maximum AC Ratings 10 watt	Maximum AC Ratings 22 watt	Maximum DC Ratings 10 watt	Maximum DC Ratings 22 watt	MAX.** Fluid Temp. (F)	Pressure Vessel Number	UL/CSA*** Approval	Const. Ref.
1/4”	5/16	2.5	5	600		600		185	7322HBN2SV00	GP	24
3/8”	7/16	3.5	5	600		600		185	7322HBN3TN00	GP	24
1/2”	9/16	4.1	5	600		600		185	7322HBN4UN00	GP	24

* *Pilot operated valves require the minimum pressure differential specified for proper valve operation.*

** *Maximum fluid temperatures are provided for Class F coils. Valves with FKM seals (letter ‘V’ in 10th position of pressure vessel number) can be used at fluid temperatures up to 250°F on DC and 250°F on AC provided a Class H coil is used. Pressure ratings may be reduced, however. Consult factory for details.*

*** *UL/CSA Approval information: SS = Safety Shutoff GP = General Purpose Blank = Not Approved*
See page 136 for additional agency approval information.

^ *Rating suitable for all 22 watt integrated coils except DIN 300 coil. Consult Skinner Valve for application review.*
See page 134 for additional seal material combinations.

DRAWINGS

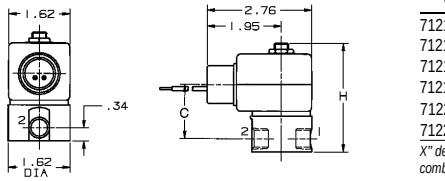

Valve	Dimension H	Dimension C
71215SN1XXXX	2.84	1.48
71215SN2XXXX	2.84	1.48
71216SN1XXXX	2.84	1.48
71216SN2XXXX	2.84	1.48
71225SN1XXXX	3.08	1.68
71225SN2XXXX	3.08	1.68

X” denotes multiple digit combinations for brevity.

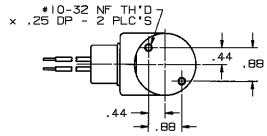

NORMALLY CLOSED NORMALLY OPEN

Port Identification: 1-OUT/ 2-IN

#101

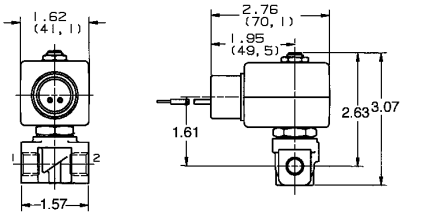

NORMALLY CLOSED NORMALLY OPEN

Port Identification: 1-IN/ 2-OUT

#97

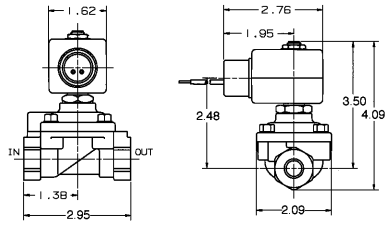

NORMALLY CLOSED

NORMALLY OPEN

Port Identification: Flow arrow on body indicates flow direction– ports are not marked.

#24

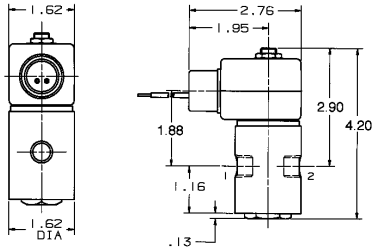

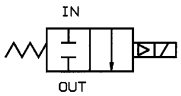

#17

Port Identification: 2-IN/ 1-OUT

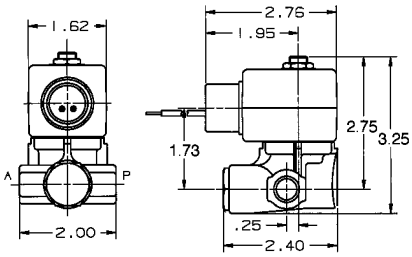

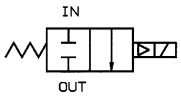

#10

Port Identification: P-IN/ A-OUT

SKINNER 7000 Series Anti-Water Hammer Two-Way Direct Lift and Pilot Operated Valves

SPECIFICATIONS

Mechanical Characteristics

Standard Materials of Construction

- Body–Brass
- Seals–NBR
- Sleeve Tube–Stainless Steel (303 or 304)
- Plunger–Stainless Steel (430FR)
- Shading Ring–Copper
- Stop–Stainless Steel (430FR)
- Springs–Stainless Steel (18-8)
- Pilot Orifice–Stainless Steel (303)

Compatible Fluids

- Water up to 185°F

Electrical Characteristics

Voltages

- DC–12, 24
- AC–24/60, 110/50-120/60, 208/60, 220/50-240/60, 440/50-480/60 (other AC/DC voltages available upon request)

Power Consumption

- 10, 22 watts
- Fluxtron* Electronic Coils and Magnelatch

Agency Approvals

- UL and CSA approvals are available on valves with applicable coil/enclosure combinations. For additional information see page 136.

Miscellaneous

Maximum Ambient Temperature

- 10 watt AC/DC–150°F
- 22 watt AC/DC–77°F
- Fluxtron*/Magnelatch–122°F

* Fluxtron coils not suitable for use on direct lift valves.

DIRECT LIFT BRASS VALVES–NORMALLY CLOSED, NBR SEALS

Pipe Size NPT	Orifice Size (inch)	Cv Factor	Operating Pressure Differential (PSI) Min.*	Maximum AC Ratings 10 watt	Maximum AC Ratings 22 watt	Maximum DC Ratings 10 watt	Maximum DC Ratings 22 watt	MAX.** Fluid Temp. (F)	Pressure Vessel Number	UL/CSA*** Approval	Const. Ref.
3/4”	19/32	5.5	0	230			100	185	7221GBN51NC0	SS	103
1”	19/32	5.5	0	230			100	185	7221GBN61NC0	SS	103
	1	11.7	0	230			85	185	7221GBN64NC0	SS	103

PILOT OPERATED BRASS VALVES–NORMALLY CLOSED, NBR SEALS

Pipe Size NPT	Orifice Size (inch)	Cv Factor	Operating Pressure Differential (PSI) Min.*	Maximum AC Ratings 10 watt	Maximum AC Ratings 22 watt	Maximum DC Ratings 10 watt	Maximum DC Ratings 22 watt	MAX.** Fluid Temp. (F)	Pressure Vessel Number	UL/CSA*** Approval	Const. Ref.
3/8”	7/16	2.5	3	150		60	150	185	7321KBN3SNW0	SS	98
1/2”	7/16	2.5	3	150		60	150	185	7321KBN4SNW0	SS	98
3/4”	3/4	9.6	5	230		230		185	7321GBN53NMC	GP	109
1”	1	12.5	5	230		230		185	7321GBN64NMC	GP	109
1 1/4”	1 1/8	19.3	5	230		230		185	7321GBN76NMC	GP	109
1 1/2”	1 9/16	29.0	5	230		200	230	185	7321GBN88NMC	GP	109
2”	1 9/16	38.6	5	230		200	230	185	7321GBN99NMC	GP	109

PILOT OPERATED BRASS VALVES–NORMALLY OPEN, NBR SEALS

Pipe Size NPT	Orifice Size (inch)	Cv Factor	Operating Pressure Differential (PSI) Min.*	Maximum AC Ratings 10 watt	Maximum AC Ratings 22 watt	Maximum DC Ratings 10 watt	Maximum DC Ratings 22 watt	MAX.** Fluid Temp. (F)	Pressure Vessel Number	UL/CSA*** Approval	Const. Ref.
3/4”	3/4	9.6	5	230		230		185	7322GBN53NC0	GP	109
1”	1	12.5	5	230		230		185	7322GBN64NC0	GP	109
1 1/4”	1 1/8	19.3	5	230		230		185	7322GBN76NC0	GP	109
1 1/2”	1 9/16	29.0	5	170		170		185	7322GBN88NC0	GP	109
2”	1 9/16	38.6	5	170		170		185	7322GBN99NC0	GP	109

7000 Series Anti-Water Hammer Two-Way Direct Lift and Pilot Operated Valves

Response Time

Valve Type	Opening Time Range (seconds)	Closing Time Range (seconds)
7221GBN51NC0	0.03	0.2-1.7
7221GBN61NC0	0.04-0.05	0.2-1.7
7221GBN64NC0	0.07-0.17	0.5-4.0
7321KBN3SNW0	0.015	0.85
7321KBN4SNW0	0.015	0.85
7321GBN53NMC	0.25-0.1	0.6-4.5
7321GBN64NMC	0.25-0.1	0.6-4.5
7321GBN76NMC	0.5-0.2	0.8-5.8
7321GBN88NMC	0.4-0.2	1.5-9.0
7321GBN99NMC	0.45-0.25	1.5-9.5
7322GBN53NC0	0.25-0.1	0.6-4.5
7322GBN64NC0	0.25-0.1	0.6-4.5
7322GBN76NC0	0.5-0.2	0.8-5.8
7322GBN88NC0	0.4-0.2	1.5-9.0
7322GBN99NC0	0.45-0.25	1.5-9.5

DRAWINGS

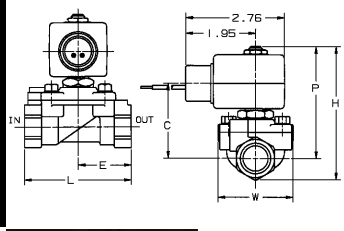

Valve	Dimension H	P	C	L	W
7321GBN53XXX	4.75	3.86	2.84	3.94	2.75
7322GBN53XXX	4.75	3.86	2.84	3.94	2.75
7321GBN64XXX	4.75	3.86	2.84	3.94	2.75
7322GBN64XXX	4.75	3.86	2.84	3.94	2.75
7321GBN76XXX	5.41	4.11	3.09	4.33	2.75
7322GBN76XXX	5.41	4.11	3.09	4.33	2.75
7321GBN88XXX	5.66	4.37	3.35	5.51	3.90
7322GBN88XXX	5.66	4.37	3.35	5.51	3.90
7321GBN99XXX	6.25	4.60	3.58	5.91	3.90
7322GBN99XXX	6.25	4.60	3.58	5.91	3.90

"X" denotes multiple digit combinations for brevity.

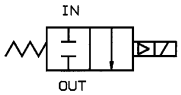

NORMALLY CLOSED

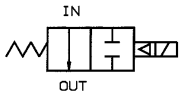

NORMALLY OPEN

Port Identification: Flow arrow on body indicates flow direction– ports are not marked.

#109

DRAWINGS

Valve	Dimension H	P	C	L
7321KBN4SXXX	3.56	2.97	1.96	2.17
7321KBN2RXXX	3.56	2.97	1.96	1.97
7321KBN3SXXX	3.56	2.97	1.96	1.97

"X" denotes multiple digit combinations for brevity.

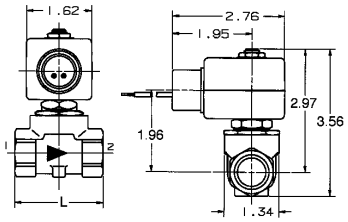

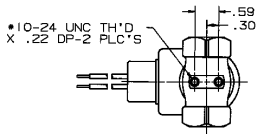

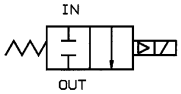

Port Identification: Flow arrow on body indicates flow direction– ports are not marked.

#98

Valve	Dimension H	P	C	L	W
7221GBN51XXX	3.75	3.07	2.06	3.15	2.09
7221GBN61XXX	4.03	3.15	2.12	3.35	2.09
7221GBN64XXX	4.25	3.35	2.34	3.94	2.75

"X" denotes multiple digit combinations for brevity.

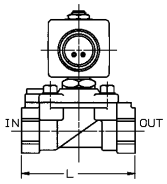

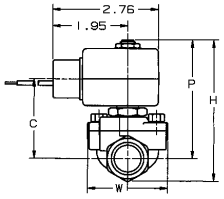

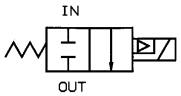

Port Identification: Flow arrow on body indicates flow direction– ports are not marked.

#103

* *Direct Lift valves will open at zero differential pressure, however, full flow through the valve will not be safely achieved. If full flow is required at near zero differential pressure, consult Skinner. Pilot operated valves require the minimum pressure differential specified for proper valve operation.*

***Maximum fluid temperatures are provided for Class F coils. Valves with FKM seals (letter 'V' in 10th position of pressure vessel number) can be used at fluid temperatures up to 250°F on DC and 250°F on AC provided a Class H coil is used. Pressure ratings may be reduced, however. Consult factory for details.*

****UL/CSA Approval Information: SS=Safety Shutoff GP=General Purpose Blank=Not Approved*
See page 136 for additional agency information.
NOTE: Mechanical Options indicated in pressure vessel catalog number (eleventh and twelfth digits) are as follows: C0=four-step adjustable closing, MC=manual override with four-step adjustable closing, W0=non-adjustable control.

SKINNER 7000 Series Manual Reset Two-Way Direct Acting and Pilot Operated Valves

SPECIFICATIONS

Mechanical Characteristics

Standard Materials of Construction

- Body–Brass or Stainless Steel (430)
- Seals–NBR or FKM seals as listed
- Sleeve Tube–Stainless Steel (303 or 304)
- Plunger–Stainless Steel (430FR)
- Shading Ring–Copper
- Stop–Stainless Steel (430FR)
- Springs–Stainless Steel (18-8)
- Pilot Orifice–Stainless Steel (303)

Compatible Fluids

- Depending on the valve used, most common media including air, inert gases or petroleum products.

Electrical Characteristics

Voltages

- DC–12, 24
- AC–110/50-120/60, 220/50-240/60

Power Consumption

- 10, 22 watts

Agency Approvals

- cUL approval.

Miscellaneous

Maximum Ambient Temperature

- 131°F

DIRECT ACTING STAINLESS STEEL MANUAL RESET VALVES–NORMALLY CLOSED, FKM SEALS*

Pipe Size NPT	Orifice Size (inch)	Cv Factor	Min.*	Operating Pressure Differential (PSI) Maximum AC Ratings 10 watt	AC Ratings 22 watt	DC Ratings 10 watt	DC Ratings 22 watt	MAX. Fluid Temp. (F)	No-Voltage Release Pressure Vessel	Electrically Tripped Pressure Vessel	Const. Ref.
1/4”	3/32	0.18	0	150			150	185	70215SN2KVVR	70215SN2KVET	25

* *All wetted parts are stainless steel, FKM and plastic.*

PILOT OPERATED BRASS MANUAL RESET VALVES–NORMALLY CLOSED, NBR SEALS

Pipe Size NPT	Orifice Size (inch)	Cv Factor	Min.*	Operating Pressure Differential (PSI) Maximum AC Ratings 10 watt	AC Ratings 22 watt	DC Ratings 10 watt	DC Ratings 22 watt	MAX. Fluid Temp. (F)	No-Voltage Release Pressure Vessel	Electrically Tripped Pressure Vessel	Const. Ref.
1/2”	5/8	4.0	5	150			150	185	70218BN4UNVR	70218BN4UNET	25
3/4”	3/4	7.3	5	300			300	185	70212BN52NVR	70212BN52NET	25
1”	1 1/16	13.5	5	125			125	185	70218BN64NVR	70218BN64NET	25
1 1/4”	1 1/8	15.0	5	125			125	185	70218BN75NVR	70218BN75NET	25
1 1/2”	1 1/4	22.5	5	125			125	185	70218BN87NVR	70218BN87NET	25

PILOT OPERATED BRASS MANUAL RESET VALVES–NORMALLY OPEN, NBR SEALS

Pipe Size NPT	Orifice Size (inch)	Cv Factor	Min.*	Operating Pressure Differential (PSI) Maximum AC Ratings 10 watt	AC Ratings 22 watt	DC Ratings 10 watt	DC Ratings 22 watt	MAX. Fluid Temp. (F)	No-Voltage Release Pressure Vessel	Electrically Tripped Pressure Vessel	Const. Ref.
3/4”	3/4	7.3	5	300			300	185	70222BN52NVR	70222BN52NET	25
1”	1 1/16	13.5	5	125			125	185	70228BN64NVR	70228BN64NET	25
1 1/4”	1 1/8	15.0	5	125			125	185	70228BN75NVR	70228BN75NET	25
1 1/2”	1 1/4	22.5	5	125			125	185	70228BN87NVR	70228BN87NET	25

* *Pilot operated valves require the minimum pressure differential specified for proper valve operation.*

DRAWINGS

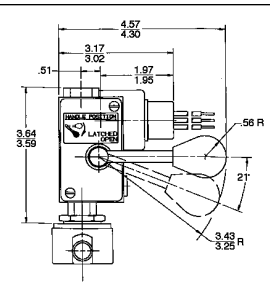

Dimension	No-Voltage Release	Electrically Tripped
A	4.64	4.40
B	4.31	4.07
C	1.79	1.59
D	3.26	3.06

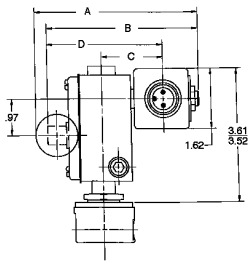

#25

SKINNER 7000 Series **Remote Pressure Operated Two-Way Remote Operated Valves**

SPECIFICATIONS

Mechanical Characteristics

Standard Materials of Construction

- Body–Brass
- Seals–NBR
- Springs–Stainless Steel (18-8)
- Pilot Orifice–Stainless Steel (303)

Compatible Fluids

- Lubricated Air, Non-Lubricated Air, Inert Gases, Water, Hydraulic Fluids, Petroleum Products and additional fluids compatible with materials of construction.

Maximum Operating Pressure Differential

- 190 PSI

Cv Factor

- 2.4 to 11.0

Pipe Sizes

- 3/8" TO 1" NPT

REMOTE PRESSURE OPERATED VALVES–DUAL PURPOSE

Pipe Size NPT	Orifice Size (inch)	Cv Factor	Pressure Vessel Catalog Number	Const. Ref.
3/8"	1/2	2.4	75232BN3SN00	26
1/2"	1/2	2.8	75232BN4TN00	26
3/4"	3/4	7.3	75232BN52N00	26
1"	1	11.0	75232BN63N00	26

TWO-WAY REMOTE OPERATED VALVE PORT CONNECTIONS

Valve Type	Main Line Supply	Remote Control Valve Hookup			3-Way Pilot Valve Hookup		
		IN Port	Out Port	Pilot Inlet Port* 1/8" NPT	Normally Closed Port	Normally Open Port	Common Port
Normally Open	0-190 PSIG	IN	Out	Common Port of 3-Way Pilot Valve	Main Line Pressure + 10 PSI Minimum	Pilot Exhaust	Pilot IN Port (1/8" NPT) of Remote Control Valve
Normally Open	Vacuum	Non-Vacuum Pump	Vacuum Pump		Main Line Pressure + 10 PSI Minimum	Vacuum	
Normally Closed	0-190 PSIG	IN	Out		Pilot Exhaust	Main Line Pressure + 10 PSI Minimum	
Normally Closed	Vacuum	Non-Vacuum Pump	Non-Vacuum Pump		Vacuum	Main Line Pressure + 10 PSI Minimum	

* *To assure long, trouble free life, the Pilot IN to main pressure differential should not exceed 200 PSIG.*

NOTE: In de-energized state, valve in normally open position.

DRAWINGS

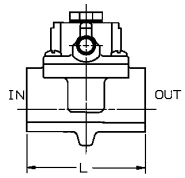

Valve	Dimension H	P	C	L	W	Port Identification IN	OUT
75232BN3SN00	3.17	2.35	1.51	2.75	1.97	IN	OUT
75232BN4TN00	3.17	2.35	1.51	2.75	1.97	IN	OUT
75232BN52N00	4.31	3.12	2.28	3.62	3.09	IN	OUT
75232BN63N00	4.73	3.40	2.56	4.31	3.45	P	A

Valve can be normally closed or normally open, depending on piping of external pilot.

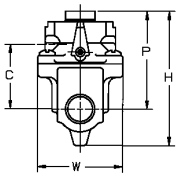

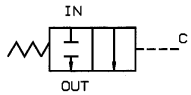

NORMALLY CLOSED

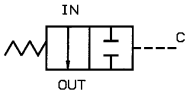

NORMALLY OPEN

#26

SKINNER 3000 Series Two-Way Direct Acting Valves

SPECIFICATIONS

Mechanical Characteristics

Standard Materials of Construction

- Body–Brass or Stainless Steel (303)
- Seals–NBR, FKM, Ethylene Propylene, CR
- Sleeve Assembly–305 Stainless Steel (tube-flange), 430F Stainless Steel (stop)
- Plunger–430F Stainless Steel
- Manifold Body–Aluminum
- Flux Plate–Plated Steel
- Housing–Plated Steel
- Integrated Coil Encapsulant–Nylon

Compatible Fluids

- Air, inert gas, water, oil

Vacuum

- Up to 5 microns depending on application

Electrical Characteristics

Voltages

- DC–6, 12, 24
- AC–24, 50/60, 110/50-120/60, 220/50-240/60

Power Consumption

- 6 watts, 7.5 for 24/60
- 3 watts

Agency Approvals

- UL and CSA component recognition.

Miscellaneous

Maximum Ambient Temperature

- 68°F for continuous duty cycle.

Response Time

- 8 to 16 milliseconds to open or close.

Duty Cycle/Cycle Time

- Continuous duty, 600 cycles per minute.

Weight

- 8 oz.

Mounting

- Two 8-32 tapped holes in bottom of valve body supplied standard. A universal mounting bracket B19-006 is also available.

DIRECT ACTING BRASS AND STAINLESS STEEL VALVES–NORMALLY CLOSED

Pipe Size NPT	Body Orifice Size (inch)	Body Cv Factor	Sleeve Orifice Size (inch)	Sleeve Cv Factor	Maximum Operating Pressure Differential (PSI)		Brass Pressure Vessel Catalog Number	Stainless Steel Pressure Vessel Catalog Number
					6 watt	3 watt*		
1/8”	1/32	0.03	-	-	800	775	3121BBN1AN00	3121BSN1AN00
	3/64	0.05	-	-	500	300	3121BBN1EN00	3121BSN1EN00
	1/16	0.09	-	-	300	95	3121BBN1GN00	3121BSN1GN00
	5/64	0.13	-	-	200	65	3121BBN1JN00	3121BSN1JN00
	3/32	0.18	-	-	175	40	3121BBN1LN00	3121BSN1LN00
	1/8	0.24	-	-	100	4	3121BBN1NN00	3121BSN1NN00
	5/32	0.30	-	-	50	-	3121BBN1QN00	3121BSN1QN00

DIRECT ACTING BRASS AND STAINLESS STEEL VALVES–NORMALLY OPEN

Pipe Size NPT	Body Orifice Size (inch)	Body Cv Factor	Sleeve Orifice Size (inch)	Sleeve Cv Factor	Maximum Operating Pressure Differential (PSI)		Brass Pressure Vessel Catalog Number	Stainless Steel Pressure Vessel Catalog Number
					6 watt	3 watt*		
1/8”	-	-	1/32	0.03	300	-	3129BBN1AN00	3129BSN1AN00
	-	-	3/64	0.05	200	-	3129BBN1EN00	3129BSN1EN00
	-	-	1/16	0.09	150	-	3129BBN1GN00	3129BSN1GN00
	-	-	5/64	0.13	80	-	3129BBN1JN00	3129BSN1JN00
	-	-	3/32	0.18	40	-	3129BBN1LN00	3129BSN1LN00

Performance Ratings Apply to All Voltages, Coil Constructions, Seal and Body Materials.

* *When ordering a pressure vessel with a 3 watt coil the second digit must be a 9. Example: 3921BBN1AN00 is a 2-way normally closed pressure vessel for use with 3 watt coils.*

MANIFOLD ASSEMBLED VALVES – NORMALLY CLOSED, COMMON INLET PRESSURE OVER SEAT

Body Orifice Size (inch)	Body Cv Factor	Sleeve Orifice Size (inch)	Sleeve Cv Factor	Maximum Operating Pressure Differential (PSI)		Cavity Manifold Assembly Catalog Number	Screw-In Manifold Assembly** Catalog Number
				6 watt	3 watt*		
3/64	0.05	-	-	500	300	3121BJA7ENC#	3121BSA6EN00
1/16	0.09	-	-	300	95	3121BJA7GNC#	3121BSA6GN00
1/8	0.24	-	-	100	4	-	3121BSA6NN00
5/32	0.30	-	-	50	-	-	3121BSA6QN00

MANIFOLD ASSEMBLED VALVES – NORMALLY OPEN, COMMON INLET PRESSURE OVER SEAT

Body Orifice Size (inch)	Body Cv Factor	Sleeve Orifice Size (inch)	Sleeve Cv Factor	Maximum Operating Pressure Differential (PSI)		Cavity Manifold Assembly Catalog Number	Screw-In Manifold Assembly** Catalog Number
				6 watt	3 watt*		
-	-	3/64	0.05	200	-	3129BJA7ENC#	3129BSA6EN00
-	-	1/16	0.09	150	-	3129BJA7GNC#	3129BSA6GN00
-	-	3/32	0.09	40	-	3129BJA7LNC#	3129BSA6LN00

** When ordering a pressure vessel with a 3 watt coil the second digit must be a 9. Example: 3921BSA6EN00 is a 2-way normally closed pressure vessel for use with 3 watt coils. Performance Ratings Apply to All Voltages, Coil Constructions, Seal and Body Materials. Screw-in body available in stainless steel only.*

 # Denotes the number of valves in the manifold, from 2 to 4.
***Screw-in manifolds and valves sold separately.*
Kit #V1-22-028 available to join manifolds when more than 4 stations required.

Screw-In Manifolds	Common Port	Pressure Direction	Number of Stations		
			2	3	4
2WNC (3121)	Inlet	Over Seat	300-40-015	300-40-016	300-40-017

DRAWINGS

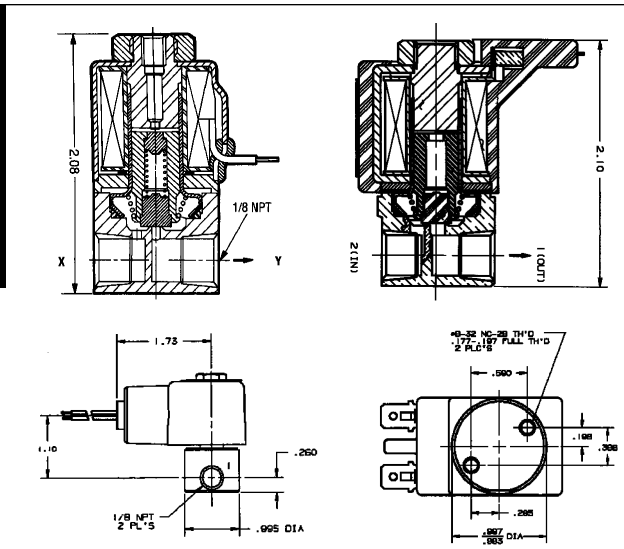

#27

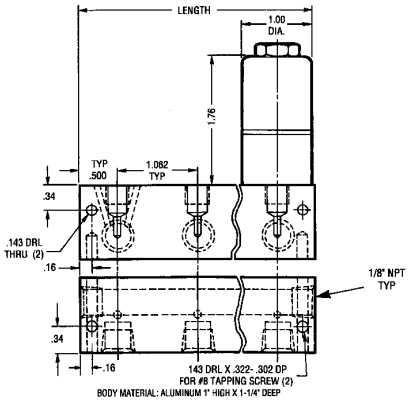

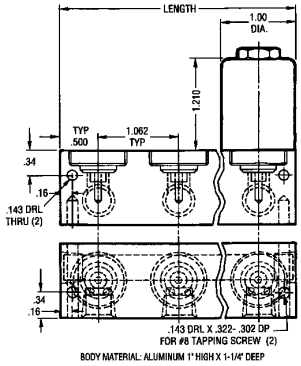

#28

SKINNER B-Series General Purpose Two-Way Direct Acting Valves

SPECIFICATIONS

Mechanical Characteristics

Standard Materials of Construction

- Body–Stainless Steel (303)
- Seals–NBR, FKM
- Sleeve–304 Stainless Steel
- Plunger–430F Stainless Steel
- Stop–430 FR Stainless Steel
- Springs–Stainless Steel (18-8)
- Shading Ring–Copper (AC only)
- Orifice 303 Stainless Steel

Compatible Fluids

- Lubricated Air, non-Lubricated Air, Inert Gases, Water, Steam, Hydraulic Fluids, Petroleum Products, Freons, and additional fluids compatible with materials of construction.

Note: Use with Steam and some Petroleum Products normally requires a plunger seal material modification. Consult Skinner Valve to specify a suitable material.

Minimum Operating Pressure Differential

- 0 PSI

Electrical Characteristics

Voltages

- DC–12, 24, 120
- AC–24/60, 120/60, 240/60 (other voltages available upon request)

Power Consumption

- 7 watts

Agency Approvals

- UL and CSA approvals are generally available on valves with applicable coil/enclosure combinations. For details consult Skinner Valve.

Miscellaneous

Vacuum

- Down to 5 microns (0.005 torr, 2x10-4 in Hg)

Operating Speed

- Up to 800 cycles per minute

Response Time

- AC–Approximately 4-8 milliseconds to open or close.
- DC–Approximately 10-15 milliseconds to open, 6-12 milliseconds to close.

DIRECT ACTING STAINLESS STEEL VALVES–NORMALLY CLOSED, NBR SEALS

Pipe Size	Orifice Diameter	Cv Factor	Max. Operating Pressure Differential (PSI)		Class A Taped Coil		Const. Ref.	Class B Taped 1/2" NPT Conduit*	Const. Ref.
			AC	DC	Grommet Enclosure	1/4" NPT Conduit			
1/8" NPT"	1/32	0.019	400	400	B2DA1400	B2DB1400	113	B2TBE1400	29
	3/64	0.045	250	250	B2DA1250	B2DB1250	113	B2TBE1250	29
	1/16	0.065	175	175	B2DA1175	B2DB1175	113	B2TBE1175	29
	1/8	0.24	50	-	B2DA1052	B2DB1052	113	B2TBE1052	29
	1/8	0.24	-	25	B2DA1026	B2DB1026	113	B2TBE1026	29

DIRECT ACTING STAINLESS STEEL VALVES–NORMALLY OPEN, FKM SEALS

Pipe Size	Orifice Diameter	Cv Factor	Max. Operating Pressure Differential (PSI)		Class A Taped Coil		Const. Ref.	Class B Taped 1/2" NPT Conduit*	Const. Ref.
			AC	DC	Grommet Enclosure	1/4" NPT Conduit			
1/8" NPT	1/32	0.019	400	400	B11DK1400	B11DM1400	114	B11TME1400	30
	3/64	0.054	200	200	B11DK1200	B11DM1200	114	B11TME1200	30
	3/32	0.13	40	40	B11DK1040	B11DM1040	114	B11TME1040	30

** Note: B Series valves with Class B taped coils and 1/2" NPT conduit are UL approved.*

Valve Options & Accessories

Optional Features	Option Code
Molded Class B leaded coil	LB
Molded Class B tab coil	TB
Molded Class H leaded coil	LH
Yoke	ET
Slotted enclosure for molded coils	EB

Accessories	Part No.
Universal mounting bracket	B19-006
Wrench nut	B99-007

For ordering instructions see Ordering Information section on page 10.

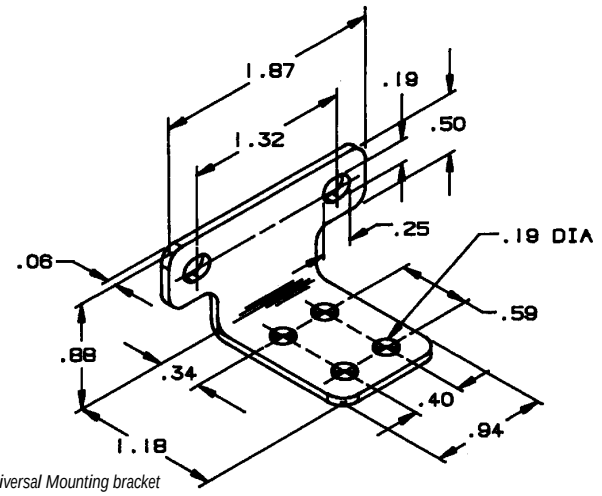

Universal Mounting bracket

DRAWINGS

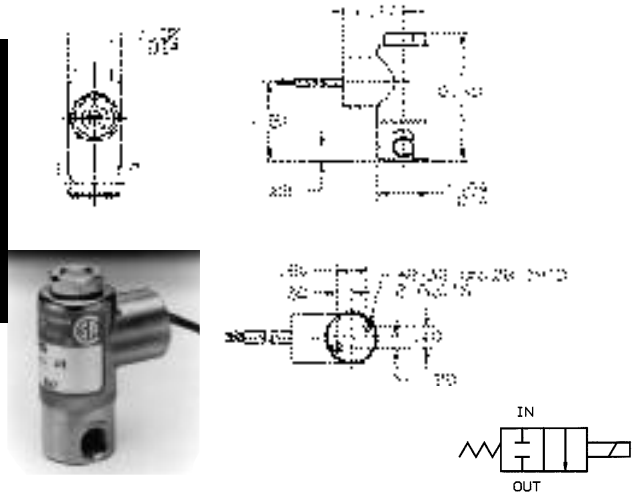

#29

Port Identification: 2-IN/ 1-OUT

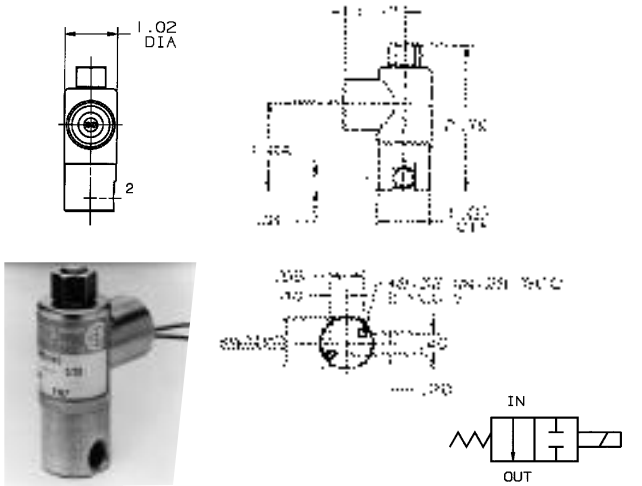

#30

Port Identification: 2-IN/ 3*-OUT
(*not marked)

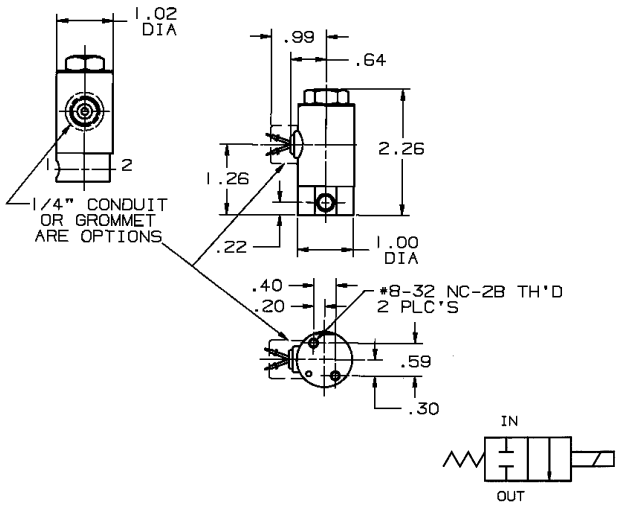

#113

Port Identification: 2-IN/ 1-OUT

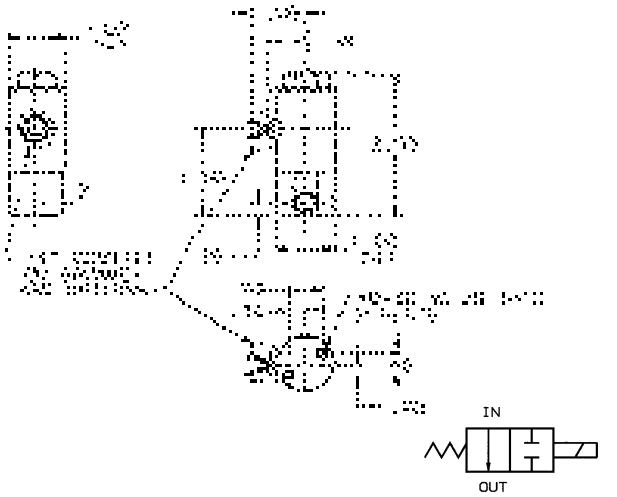

#114

Port Identification: 2-IN/ 3*-OUT
(*not marked)

SKINNER C-Series General Purpose Two-Way Direct Acting Valves

SPECIFICATIONS

Mechanical Characteristics

Standard Materials of Construction

- Body–Brass (Stainless Steel available)
- Seals–NBR, EPDM available
- Sleeve–304 Stainless Steel
- Plunger–430FR Stainless Steel
- Stop–430 FR Stainless Steel
- Springs–Stainless Steel (18-8)
- Shading Ring–Copper (AC only)
- Orifice–Brass, Stainless Steel

Compatible Fluids

- Lubricated Air, Non-Lubricated Air, Inert Gases, Water, Steam, Hydraulic Fluids, Petroleum Products, Freons, and additional fluids compatible with materials of construction. Note: Use with Steam may require plunger seal material modification. Consult Skinner Valve to specify a suitable material.

Minimum Operating Pressure Differential

- 0 PSI

Pipe Sizes

- 1/8" NPT dry seal. 1/8" BSP also available.

Electrical Characteristics

Voltages

- DC–12, 24, 120
- AC–24/60, 120/60, 240/60 (other voltages available upon request)

Power Consumption

- 8 watts

Agency Approvals

- UL and CSA approvals are generally available on valves with applicable coil/enclosure combinations. For details consult Skinner Valve.

Miscellaneous

Vacuum

- Down to 5 microns (0.005 torr, 2x10-4 in Hg)

Operating Speed

- Up to 600 cycles per minute

Response Time

- AC–Approximately 4-8 milliseconds to open or close.
- DC–Approximately 10-15 milliseconds to open, 6-12 milliseconds to close.

DIRECT ACTING BRASS VALVES–NORMALLY CLOSED, NBR SEALS

NPT Pipe Size	Orifice Diameter	Cv Factor	Max. Operating Pressure Differential (PSI)		Class A Taped Coil Brass Body		Const. Ref.
			AC	DC	Grommet Enclosure	1/2" NPT Conduit	
1/8"	1/16	0.10	275	-	C2DA1277	C2DB1277	31
	1/16	0.10	-	250	C2DA1251	C2DB1251	31
	7/64	0.25	130	-	C2DA1132	C2DB1132	31
	7/64	0.25	-	80	C2DA1081	C2DB1081	31
	1/8	0.31	90	-	C2DA1092	C2DB1092	31
	1/8	0.31	-	50	C2DA1051	C2DB1051	31
	5/32	0.39	60	-	C2DA1062	C2DB1062	31
	5/32	0.39	-	30	C2DA1031	C2DB1031	31

DIRECT ACTING BRASS STRAINER VALVE–NORMALLY CLOSED

Designed to control water in commercial and industrial applications. Widely used in humidifying equipment, this valve offers the combination of filtering and fluid control in just one component for the protection of downstream instruments or machinery.

NPT Pipe Size	Orifice Diameter	Cv Factor	Maximum Operating Pressure Differential (PSI)	Part No.	Const. Ref.
1/8"	1/16	0.09	130	C2D420CF	32

Valve Options & Accessories

Optional Features	Option Code
Molded Class F leaded coil	LF
Molded Class F tab coil	TF
Molded Class H leaded coil	LH
Yoke	ET
Single automotive terminal	EH
Double automotive terminal	EV
Strain relief connector	EJ
Enclosure w/ bracket	GD
Main stream metering	RM

Accessories	Part No.
Universal mounting bracket	V5-2158M
Wrench nut	V0-233

For ordering instructions see Ordering Information section on page 10.

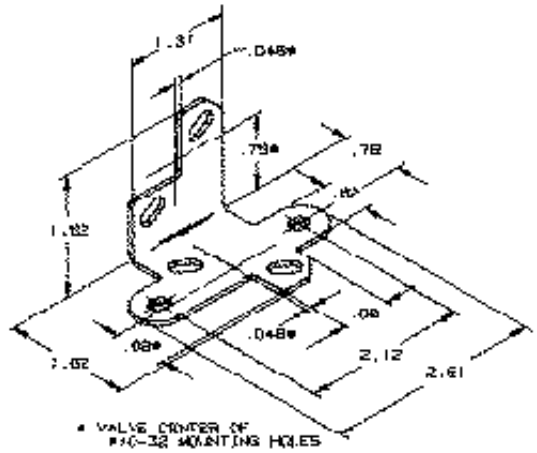

Universal Mounting bracket

DRAWINGS

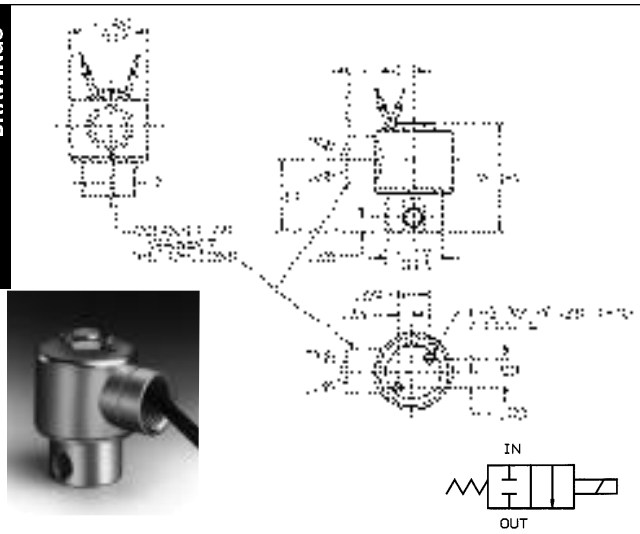

#31

Port Identification: 2-IN/ 1-OUT

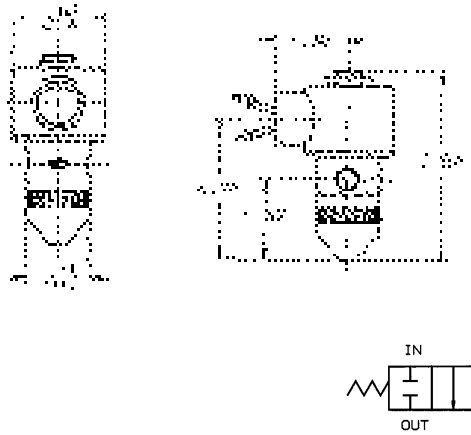

#32

Port Identification: Flow arrow on body indicates flow direction– ports are not marked.

SKINNER LB27 Series Zero Delta P **Two-Way Direct Lift Valves**

SPECIFICATIONS

Mechanical Characteristics

Standard Materials of Construction

- Body–Brass
- Seals–NBR, FKM as listed
- Sleeve–Stainless Steel
- Plunger–Stainless Steel
- Stop–Stainless Steel
- Springs–Stainless Steel
- Shading Ring–Copper

Compatible Fluids

- Lubricated Air, Non-Lubricated Air, Inert Gases, Water, Hydraulic Fluids, Petroleum Products, and additional fluids compatible with materials of construction.

Electrical Characteristics

Voltages

- AC–24/60, 110/50-120/60, 220/50-240/60 (other voltages available upon request)

Power Consumption

- 20 watts (Normal location)
- 22 watts (Explosion-proof)

Agency Approvals

- Valves are UL listed and CSA certified general purpose for normal location. Explosion-proof valves are UL listed and CSA certified for hazardous locations Class I groups C and D, Class II groups E, F, and G.

Miscellaneous

Maximum Ambient Temperature

- 77°F

BRASS VALVES–NORMALLY CLOSED FOR NORMAL LOCATIONS

Pipe Size NPT	Orifice Size (inch)	Cv Factor	Operating Pressure Differential (PSI) Minimum*	Operating Pressure Differential (PSI) Maximum	Max. Fluid Temp. (F)	Catalog Number	Seal Mat'l	Constr. Ref.
1"	1 1/16	13.5	0	125	180	LB27BB6127	NBR	33
1 1/4"	1 1/8	15.0	0	125	180	LB27BB7127	NBR	33
1 1/2"	1 1/4	22.5	0	125	180	LB27BB8127	NBR	33
1"	1 1/16	13.5	0	125	180	LB27B110	FKM	33
1 1/4"	1 1/8	15.0	0	125	180	LB27B120	FKM	33
1 1/2"	1 1/4	22.5	0	125	180	LB27B130	FKM	33

BRASS VALVES–NORMALLY CLOSED FOR HAZARDOUS LOCATIONS

Pipe Size NPT	Orifice Size (inch)	Cv Factor	Operating Pressure Differential (PSI) Minimum*	Operating Pressure Differential (PSI) Maximum	Max. Fluid Temp. (F)	Catalog Number	Seal Mat'l	Constr. Ref.
1"	1 1/16	13.5	0	125	180	XLB27BB6127	NBR	34
1 1/4"	1 1/8	15.0	0	125	180	XLB27BB7127	NBR	34
1 1/2"	1 1/4	22.5	0	125	180	XLB27BB8127	NBR	34
1"	1 1/16	13.5	0	125	180	XLB27B110	FKM	34
1 1/4"	1 1/8	15.0	0	125	180	XLB27B120	FKM	34
1 1/2"	1 1/4	22.5	0	125	180	XLB27B130	FKM	34

** Valves will open at zero differential pressure, however full flow through the valve will not be achieved. If full flow is required at near zero differential, consult factory.*

DRAWINGS

Pipe Size	Dimension A	B	C	D	E	F	G	H
1"	5.87	5.00	3.61	1.86	1.73	2.13	1.96	3.24
1 1/4"	6.15	5.12	3.75	1.86	1.73	2.13	1.96	3.24
1 1/2"	6.46	5.29	3.92	1.86	2.24	2.24	2.15	3.94

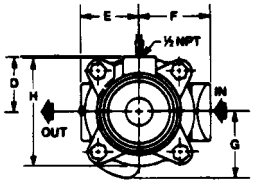

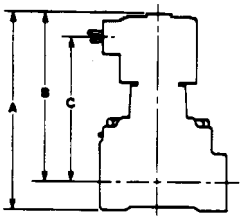

#33

Pipe Size	Dimension A	B	C	D	E	F	G	H
1"	5.95	5.07	4.35	1.70	1.73	2.13	1.96	3.24
1 1/4"	6.24	5.21	4.49	1.70	1.73	2.13	1.96	3.24
1 1/2"	6.55	5.37	4.66	1.70	2.24	2.24	2.15	3.94

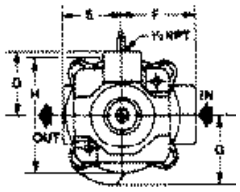

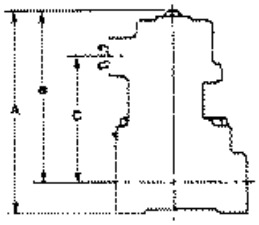

#34

SKINNER A2 Series Low Pressure and Vacuum Two-Way Direct Acting Valves

SPECIFICATIONS

Mechanical Characteristics

Standard Materials of Construction

- Body–Brass
- Seals–NBR, FKM
- Sleeve–Stainless Steel (304)
- Plunger–Stainless Steel (430FR)
- Stop–Stainless Steel (430FR)
- Springs–Stainless Steel (18-8)
- Shading Ring–Copper
- Orifice–Brass

Compatible Fluids

- Lubricated Air, Non-Lubricated Air, Inert Gases, Oils and additional fluids compatible with materials of construction.

Electrical Characteristics

Voltages

- DC–12, 24, 120
- AC–24/60, 120/60, 240/60 (other voltages available upon request)

Power Consumption

- 18 watts

Miscellaneous

Vacuum

- Down to 5 microns (0.005 torr, 2x10-4 in Hg)

Operating Speed

- Up to 300 cycles per minute.

Response Time

- Approximately 7 to 12 milliseconds to open, 15 to 26 milliseconds to close (air only).

Standard Valve Construction

Coil Type

- Class B molded leaded

Enclosure Type

- Die-cast zinc coil enclosure with 1/2" NPT conduit connection.

BRASS VALVE–NORMALLY CLOSED

NPT Pipe Size	Orifice Diameter	Cv Factor	Maximum Operating Pressure Differential (PSI)		Class B Molded 1/2" NPT Conduit	Const. Ref.
			AC	DC		
1/2"	1/2	2.7	15		A2LB4017	35
	1/2	2.7		5	A26LB4006	35

DRAWINGS

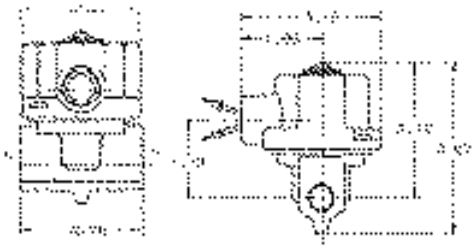

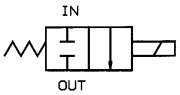

#35

Port Identification: P-IN/ A-OUT

Three-Way Valve Contents

SPECIFICATIONS

Mechanical Characteristics

Standard Materials of Construction

- Body–Brass or Stainless Steel (303 or 430F)
- Seals–NBR, FKM, PCTFE as listed
- Sleeve Tube–Stainless Steel (303 or 304)
- Plunger–Stainless Steel (430FR)
- Stop–Stainless Steel (430FR)
- Springs–Stainless Steel (18-8)
- Shading Ring–Copper
- Pilot Orifice–Stainless Steel (303)

Compatible Fluids

- Lubricated Air, Non-Lubricated Air, Inert Gases, Water, Hydraulic Fluids, Petroleum Products and additional fluids compatible with materials of construction. Use of non-lubricated gaseous media will substantially limit valve life.

Electrical Characteristics

Voltages

- DC–12, 24
- AC–24/60, 110/50-120/60, 208/60, 220/50-240/60, 440/50-480/60 (other AC/DC voltages available upon request)

Agency Approvals

- UL and CSA approvals are available on valves with applicable coil/enclosure combinations. For additional information see page 136.

Miscellaneous

Maximum Ambient Temperature

- 10 watt AC/DC–150°F
- 22 watt AC/DC–77°F
- Fluxtron/Magnelatch–122°F

7131 DIRECT ACTING BRASS VALVES–NORMALLY CLOSED, PCTFE OR FKM SEALS

Pipe Size NPT	Orifice Body NC (inch)	Orifice Body NO (inch)	Orifice Sleeve Size (inch)	Cv Factor NC	Cv Factor NO	Operating Pressure Differential (PSI) Min.	Maximum AC Ratings 10 watt	Maximum AC Ratings 22 watt	Maximum DC Ratings 10 watt	Maximum DC Ratings 22 watt	Max.* Fluid Temp. (F)	Pressure Vessel Catalog Number	UL/CSA** Approval	Const. Ref.
FLG^	3/32		3/32	0.24	0.24	0	100		100		185	7131FBF4LV00	GP	36
1/8"	1/16		1/16	0.11	0.11	0	215		215		185	7131KBN1GV00	GP	37
	3/32		3/32	0.24	0.24	0	100		100		185	7131KBN1LV00	GP	37
1/4"	1/32		1/32	0.02	0.02	0	580		580		165	7131KBN2BF00	GP	37
	1/16		1/16	0.11	0.11	0	215		215		185	7131KBN2GV00	GP	37
	5/64		3/32	0.17	0.24	0	150		150		185	7131KBN2JV00	GP	37
	3/32		3/32	0.24	0.24	0	100		100		185	7131KBN2LV00	GP	37
	5/64	1/8		0.17	0.31	0	150		150		185	7131TBN2JV00	GP	38
	3/32	9/64		0.24	0.38	0	110		110		185	7131TBN2LV00	GP	38
	3/16	1/4		0.49	0.63	0	30		30		185	7131TBN2RV00	GP	38

^ *2, 3 and 5 station subbases with 1/4" BSP common inlet port and 1/8" BSP outlet ports are available for use with D400 and D500 32mm DIN coils only. For details consult factory.*

7131 DIRECT ACTING STAINLESS STEEL VALVES – NORMALLY CLOSED, NBR OR FKM SEALS

'5' Family valves also available with FKM seals.

Pipe Size NPT	Orifice Body NC (inch)	Orifice Body NO (inch)	Orifice Sleeve Size (inch)	Cv Factor NC	Cv Factor NO	Operating Pressure Differential (PSI) Min.	Maximum AC Ratings 10 watt	Maximum AC Ratings 22 watt	Maximum DC Ratings 10 watt	Maximum DC Ratings 22 watt	Max.* Fluid Temp. (F)	Pressure Vessel Catalog Number	UL/CSA** Approval	Const. Ref.
1/8"	3/64		1/16	0.062	0.095	0	250		250		185	71315SN1EN00	GP	39
	3/64		1/16	0.062	0.095	0	250		250		185	71315SN1ENJ1	GP	39
	1/16		1/16	0.11	0.095	0	200		200		185	71315SN1GN00	GP	39
	1/16		1/16	0.11	0.095	0	200		200		185	71315SN1GNJ1	GP	39
	3/32		3/32	0.17	0.17	0	125		125		185	71315SN1KN00	GP	39
	3/32		3/32	0.17	0.17	0	125		125		185	71315SN1KNJ1	GP	39
	1/8		3/32	0.23	0.17	0	90		90		185	71315SN1MN00	GP	39
	1/8		3/32	0.23	0.17	0	90		90		185	71315SN1MNJ1	GP	39
	3/16		3/32	0.38	0.17	0	25		25		185	71315SN1SN00	GP	39
	3/16		3/32	0.38	0.17	0	25		25		185	71315SN1SNJ1	GP	39
	1/4		3/32	0.67	0.17	0	vac		vac		185	71315SN1VNJ1	GP	39
1/4"	3/64		1/16	0.062	0.095	0	250		250		185	71315SN2EN00	GP	39
	3/64		1/16	0.062	0.095	0	250		250		185	71315SN2ENJ1	GP	39
	1/16		1/16	0.11	0.095	0	200		200		185	71315SN2GN00	GP	39
	1/16		1/16	0.11	0.095	0	200		200		185	71315SN2GNJ1	GP	39
	3/32		3/32	0.17	0.17	0	125		125		185	71315SN2KN00	GP	39
	3/32		3/32	0.17	0.17	0	125		125		185	71315SN2KNJ1	GP	39
	1/8		3/32	0.23	0.17	0	90		90		185	71315SN2MN00	GP	39
	1/8		3/32	0.23	0.17	0	90		90		185	71315SN2MNJ1	GP	39
	3/16		3/32	0.38	0.17	0	25		25		185	71315SN2SN00	GP	39
	3/16		3/32	0.38	0.17	0	25		25		185	71315SN2SNJ1	GP	39
	1/4		3/32	0.67	0.17	0	vac		vac		185	71315SN2VNJ1	GP	39
	1/16	1/16		0.095	0.095	0	200		200		185	7131TVN2GV00	GP	40
	5/64	5/64		0.18	0.18	0	150		150		185	7131TVN2JV00	GP	40
	3/32	3/32		0.19	0.19	0	110		110		185	7131TVN2LV00	GP	40
	1/8	1/8		0.32	0.32	0	70		70		185	7131TVN2NV00	GP	40

* *Maximum fluid temperatures are provided for Class F coils. Valves with FKM seals (letter 'V' in the 10th position of pressure vessel number) can be used at fluid temperatures up to 240°F on DC and 250°F on AC provided a Class H coil is used.*

***UL/CSA Approval Information: GP=General Purpose Blank=Not Approved*
See page 136 for additional agency approval information.

DRAWINGS

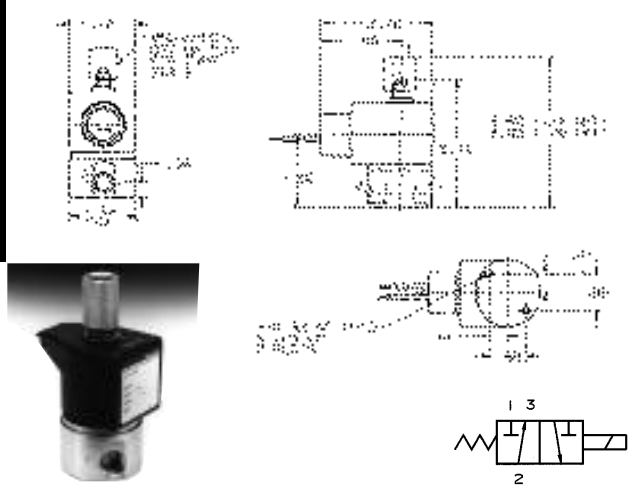

#39

Port Identification:
1-Pressure/ 2-Cylinder/ 3-Exhaust

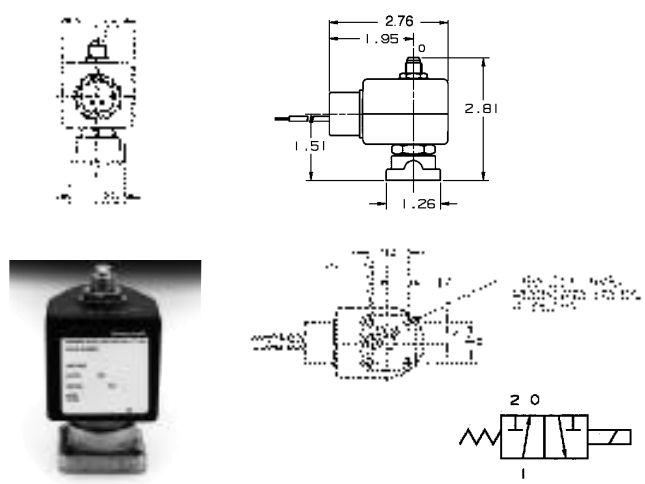

#36

Port Identification:
1-Cylinder/ 2-Pressure/ 0-Exhaust

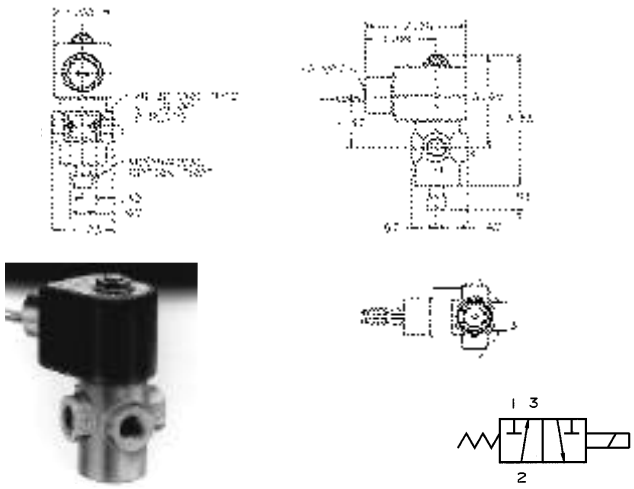

#38

Port Identification:
1-Pressure/ 2-Cylinder/ 3-Exhaust

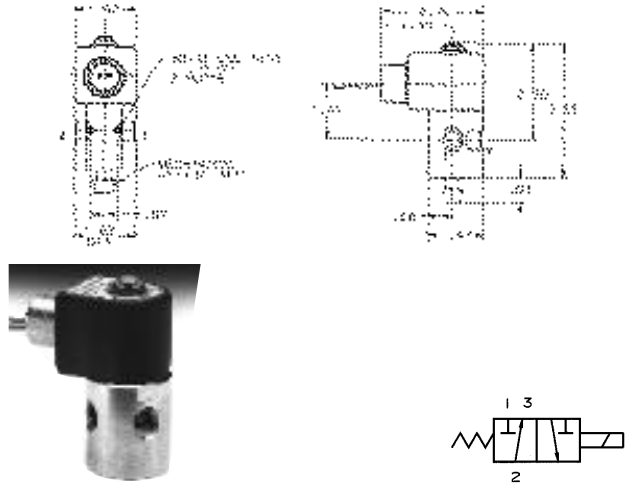

#40

Port Identification:
1-Pressure/ 2-Cylinder/ 3-Exhaust

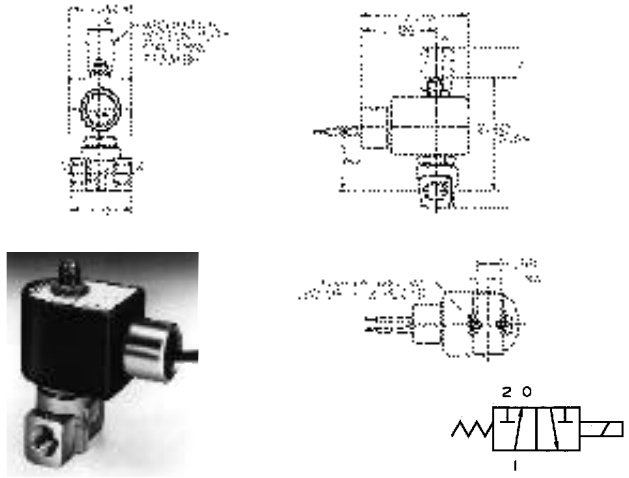

#37

Port Identification:
1-Cylinder/ 2-Pressure/ 0-Exhaust

7132 DIRECT ACTING BRASS VALVES – NORMALLY OPEN, FKM SEALS

Pipe Size NPT	Orifice Body NC (inch)	Orifice Body NO (inch)	Orifice Sleeve Size (inch)	Cv Factor NC	Cv Factor NO	Operating Pressure Differential (PSI) Min.	Maximum AC Ratings 10 watt	Maximum AC Ratings 22 watt	Maximum DC Ratings 10 watt	Maximum DC Ratings 22 watt	Max.* Fluid Temp. (F)	Pressure Vessel Catalog Number	UL/CSA** Approval	Const. Ref.
1/4”	5/32	1/8		0.31	0.41	0	150				185	7132TBN2NV00	GP	118

7139 DIRECT ACTING STAINLESS STEEL VALVES – NORMALLY OPEN, NBR SEALS

‘5’ family valves also available with FKM seals.

Pipe Size NPT	Orifice Body NC (inch)	Orifice Body NO (inch)	Orifice Sleeve Size (inch)	Cv Factor NC	Cv Factor NO	Operating Pressure Differential (PSI) Min.	Maximum AC Ratings 10 watt	Maximum AC Ratings 22 watt	Maximum DC Ratings 10 watt	Maximum DC Ratings 22 watt	Max.* Fluid Temp. (F)	Pressure Vessel Catalog Number	UL/CSA** Approval	Const. Ref.
1/8”	1/16		3/64	0.10	0.052	0	250		250		185	71395SN1ENJ1	GP	120
	1/8		1/16	0.28	0.10	0	150		150		185	71395SN1GNJ1	GP	120
	1/8		3/32	0.28	0.17	0	125		125		185	71395SN1KNJ1	GP	120
1/4”	1/16		3/64	0.10	0.052	0	250		250		185	71395SN2ENJ1	GP	120
	1/8		1/16	0.28	0.10	0	150		150		185	71395SN2GNJ1	GP	120
	1/8		3/32	0.28	0.17	0	125		125		185	71395SN2KNJ1	GP	120

* *Maximum fluid temperatures are provided for Class F coils. Valves with FKM seals (letter ‘V’ in the 10th position of pressure vessel number) can be used at fluid temperatures up to 250°F on DC and 250°F on AC provided a Class H coil is used. Pressure ratings may be reduced, however. Consult factory for details.*

***UL/CSA Approval Information: SS=Safety Shutoff SGP=General Purpose Blank=Not Approved*
See page 136 for additional agency approval information.

DRAWINGS

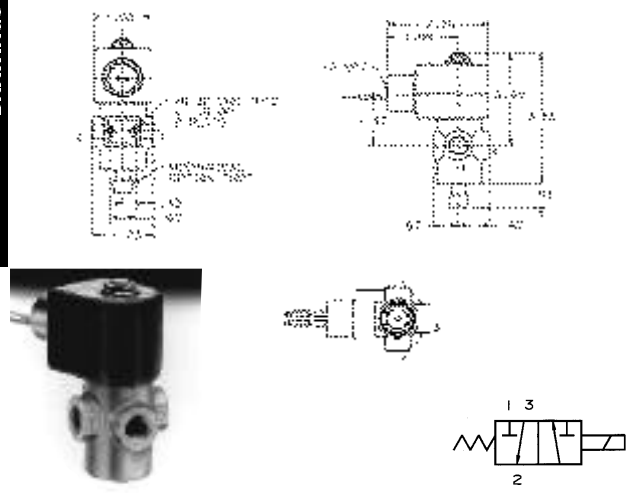

#118

Port Identification:
1-Exhaust/ 2-Cylinder/ 3-Pressure

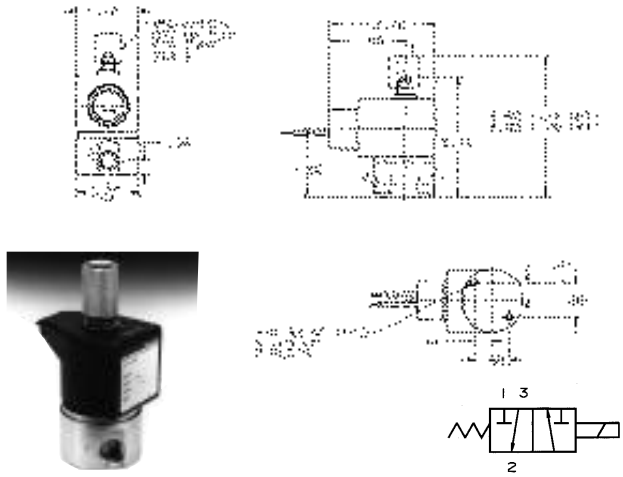

#120

Port Identification:
1-Exhaust/ 2-Cylinder/ 3-Pressure

7133 DIRECT ACTING BRASS VALVES–MULTIPURPOSE, FKM SEALS

Pipe Size NPT	Orifice Body NC (inch)	Orifice Body NO (inch)	Orifice Sleeve Size (inch)	Cv Factor NC	Cv Factor NO	Operating Pressure Differential (PSI) Min.	Maximum AC Ratings 10 watt	Maximum AC Ratings 22 watt	Maximum DC Ratings 10 watt	Maximum DC Ratings 22 watt	Max.* Fluid Temp. (F)	Pressure Vessel Catalog Number	UL/CSA** Approval	Const. Ref.
FLG^	3/32		3/32	0.24	0.24	0	60		60		185	7133FBF4LVJ1	GP	114
1/8"	1/16		1/16	0.11	0.11	0	150		150		185	7133KBN1GVJ1	GP	116
	5/64		5/64	0.15	0.15	0	100		100		185	7133KBN1JVJ1	GP	116
	3/32		3/32	0.24	0.24	0	60		60		185	7133KBN1LVJ1	GP	116
1/4"	1/32		1/32	0.02	0.02	0	435		435		185	7133KBN2BVJ1	GP	116
	1/16		1/16	0.10	0.10	0	150		150		185	7133KBN2GVJ1	GP	116
	5/64		5/64	0.15	0.15	0	100		100		185	7133KBN2JVJ1	GP	116
	3/32		3/32	0.24	0.24	0	60		60		185	7133KBN2LVJ1	GP	116
	5/64	5/64		0.17	0.17	0	100		100		185	7133TBN2JV00	GP	119
	3/32	3/32		0.19	0.19	0	60		60		185	7133TBN2LV00	GP	119
	1/8	1/8		0.31	0.31	0	30		30		185	7133TBN2NV00	GP	119

** Maximum fluid temperatures are provided for Class F coils. Valves with FKM seals (letter 'V' in the 10th position of pressure vessel number) can be used at fluid temperatures up to 250°F on DC and 250°F on AC provided a Class H coil is used. Pressure ratings may be reduced, however. Consult factory for details.*

***UL/CSA Approval Information: SS=Safety Shutoff GP=General Purpose Blank=Not Approved*
See page 136 for additional agency approval information.

^ 2, 3 and 5 station subbases with 1/4" BSP outlet ports and 1/8"BSP outlet ports are available for use with D400 and D500 32mm DIN coils only. For details consult factory.

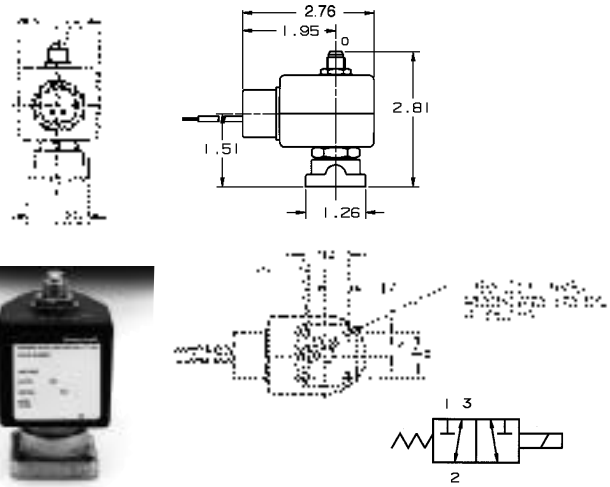

#114

Port Identification:
Pressure can be applied at either port.

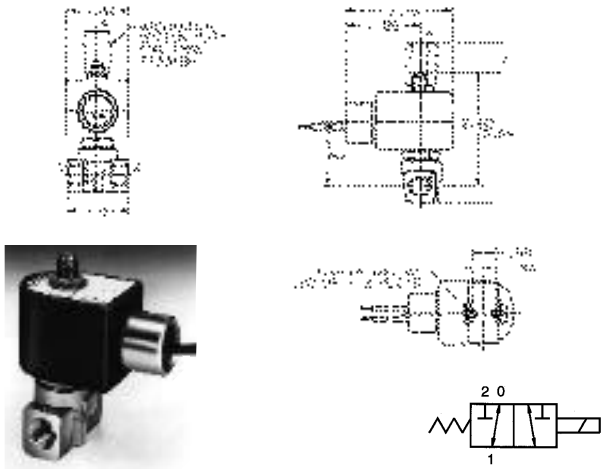

#116

Port Identification:
Pressure can be applied at either port.

DRAWINGS

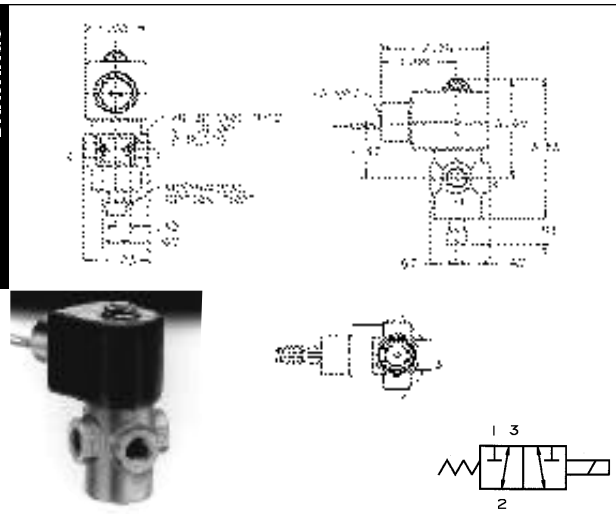

#119

Port Identification:
Pressure can be applied at either port.

7133 DIRECT ACTING STAINLESS STEEL VALVES – MULTIPURPOSE, NBR OR FKM SEALS

'5' family valves also available with FKM seals.

Pipe Size NPT	Orifice Body NC (inch)	Orifice Body NO (inch)	Orifice Sleeve Size (inch)	Cv Factor NC	Cv Factor NO	Operating Pressure Differential (PSI) Min.	Maximum AC Ratings 10 watt	Maximum AC Ratings 22 watt	Maximum DC Ratings 10 watt	Maximum DC Ratings 22 watt	Max.* Fluid Temp. (F)	Pressure Vessel Catalog Number	UL/CSA** Approval	Const. Ref.
1/8"	1/32		1/32	0.024	0.024	0	400		400		185	71335SN1ANJ1	GP	121
	3/64		3/64	0.052	0.052	0	180		180		185	71335SN1ENJ1	GP	121
	1/16		1/16	0.095	0.095	0	115		115		185	71335SN1GNJ1	GP	121
	3/32		3/32	0.17	0.17	0	80		80		185	71335SN1KNJ1	GP	121
1/4"	1/32		1/32	0.024	0.024	0	400		400		185	71335SN2ANJ1	GP	121
	3/64		3/64	0.052	0.052	0	180		180		185	71335SN2ENJ1	GP	121
	1/16		1/16	0.095	0.095	0	115		115		185	71335SN2GNJ1	GP	121
	3/32		3/32	0.17	0.17	0	80		80		185	71335SN2KNJ1	GP	121
	1/16	1/16		0.095	0.095	0	150		150		185	7133TVN2GV00	GP	123
	5/64	5/64		0.18	0.18	0	100		100		185	7133TVN2JV00	GP	123
	3/32	3/32		0.19	0.19	0	60		60		185	7133TVN2LV00	GP	123
	1/8	1/8		0.32	0.32	0	30		30		185	7133TVN2NV00	GP	123

DRAWINGS

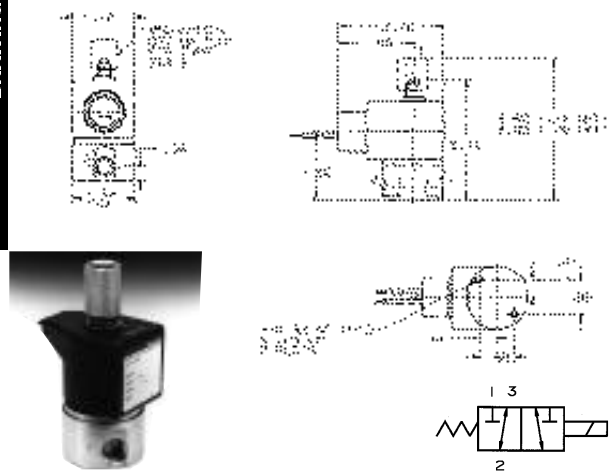

#121

Port Identification:
Pressure can be applied at either port.

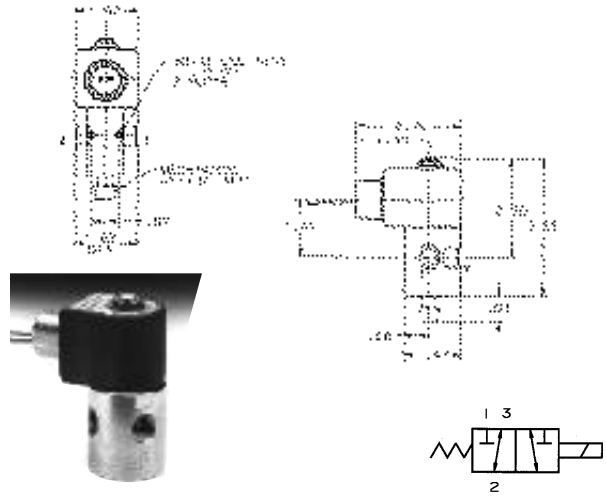

#123

Port Identification:
Pressure can be applied at either port.

7138 DIRECT ACTING STAINLESS STEEL VALVES–DIVERTING, NBR SEALS

'5' family valves also available with FKM seals.

Pipe Size NPT	Orifice Body NC (inch)	Orifice Body NO (inch)	Orifice Sleeve Size (inch)	Cv Factor NC	Cv Factor NO	Operating Pressure Differential (PSI) Min.	Maximum AC Ratings 10 watt	Maximum AC Ratings 22 watt	Maximum DC Ratings 10 watt	Maximum DC Ratings 22 watt	Max.* Fluid Temp. (F)	Pressure Vessel Catalog Number	UL/CSA** Approval	Const. Ref.
1/8"	1/16		1/16	0.095	0.095	0	235		235		185	71385SN1GNJ1	GP	122
	3/32		3/32	0.17	0.17	0	140		140		185	71385SN1KNJ1	GP	122
	1/8		3/32	0.23	0.17	0	125		125		185	71385SN1MNJ1	GP	122
1/4"	1/16		1/16	0.095	0.095	0	235		235		185	71385SN2GNJ1	GP	122
	3/32		3/32	0.17	0.17	0	140		140		185	71385SN2KNJ1	GP	122
	1/8		3/32	0.23	0.17	0	125		125		185	71385SN2MNJ1	GP	122

* *Maximum fluid temperatures are provided for Class F coils. Valves with FKM seals (letter 'V' in the 10th position of pressure vessel number) can be used at fluid temperatures up to 240°F on DC and 250°F on AC provided a Class H coil is used.*

***UL/CSA Approval Information: GP=General Purpose Blank=Not Approved*
See page 136 for additional agency approval information.

DRAWINGS

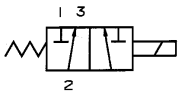

#122

Port Identification:
1-NC/ 2-IN/ 3-NO

SPECIFICATIONS

Mechanical Characteristics

Standard Materials of Construction

- Body–Brass
- Seals–NBR
- Diaphragm Seal–NBR/PTFE
- Sleeve Tube–Stainless Steel (304)
- Plunger–Stainless Steel (430FR)
- Stop–Stainless Steel (430FR)
- Springs–Stainless Steel (18-8)
- Shading Ring–Copper
- Pilot Orifice–Stainless Steel (303)

Compatible Fluids

- Lubricated Air, Non-Lubricated Air, Inert Gases, Water, Hydraulic Fluids, Petroleum Products and additional fluids compatible with materials of construction. Use of non-lubricated gaseous media will substantially limit valve life.

Electrical Characteristics

Voltages

- DC–12, 24
- AC–24/60, 110/50-120/60, 208/60, 220/50-240/60, 440/50-480/60 (other AC/DC voltages available upon request)

Agency Approvals

- UL and CSA approvals are available on valves with applicable coil/enclosure combinations. For additional information see page 136.

Miscellaneous

Maximum Ambient Temperature

- 10 watt AC/DC–150°F
- 22 watt AC/DC–77°F
- Fluxtron/Magnelatch–122°F

7331 PILOT OPERATED BRASS VALVES–NORMALLY CLOSED, NBR SEALS

Pipe Size NPT	Orifice Body NC (inch)	Orifice Body NO (inch)	Cv Factor NC	Cv Factor NO	Operating Pressure Differential (PSI) Min.*	Maximum AC Ratings 10 watt	Maximum AC Ratings 22 watt	Maximum DC Ratings 10 watt	Maximum DC Ratings 22 watt	Max. Fluid Temp. (F)	Pressure Vessel Catalog Number	UL/CSA** Approval	Const. Ref.
3/8”	3/8	3/8	2.1	2.1	10	180		180		185	73312BN3RNJ0	GP	41
	3/8	3/8	2.1	2.1	10	180		180		185	73312BN3RNJ1	GP	42
1/2”	1/2	1/2	3.6	3.6	10	180		180		185	73312BN4UNJ0	GP	41
	1/2	1/2	3.6	3.6	10	180		180		185	73312BN4UNJ1	GP	42
3/4”	3/4	3/4	7.3	7.3	10	180		180		185	73312BN52NJ0	GP	43
	3/4	3/4	7.3	7.3	10	180		180		185	73312BN52NJ1	GP	44

DRAWINGS

Valve	Dimension H	P	C	L	W	S	T	R	J	K
73312BN3RNJ1	4.89	3.98	1.96	2.97	2.62	0.65	0.59	1.44	1.22	0.91
73312BN4UNJ1	5.10	4.08	2.08	3.38	3.09	0.78	0.69	1.66	1.44	1.06

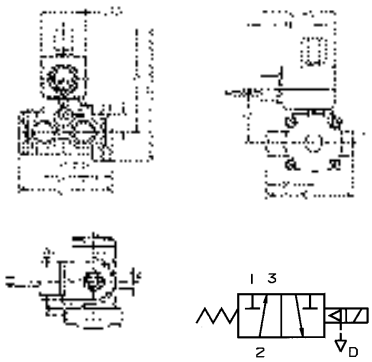

#42

Port Identification:
1-Pressure/ 2-Cylinder/ 3-Exhaust

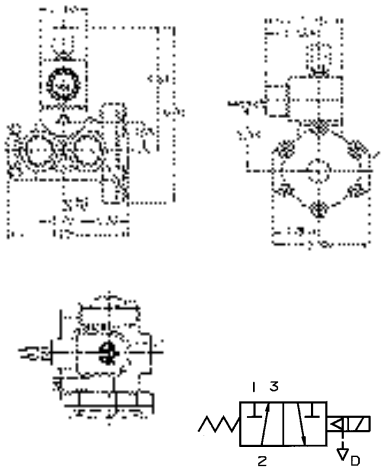

#44

Port Identification:
1-Pressure/ 2-Cylinder/ 3-Exhaust

DRAWINGS

	Dimension								
Valve	H	P	C	L	W	T	R	J	K
73312BN3RNJ0	5.34	4.41	1.96	2.97	2.62	0.59	1.44	1.22	0.91
73312BN4UNJ0	5.62	4.56	2.08	3.38	3.09	0.69	1.66	1.41	1.06

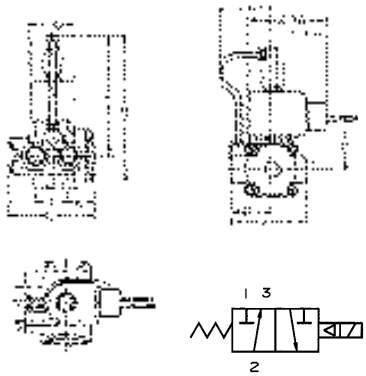

#41

Port Identification:
1-Pressure/ 2-Cylinder/ 3-Exhaust

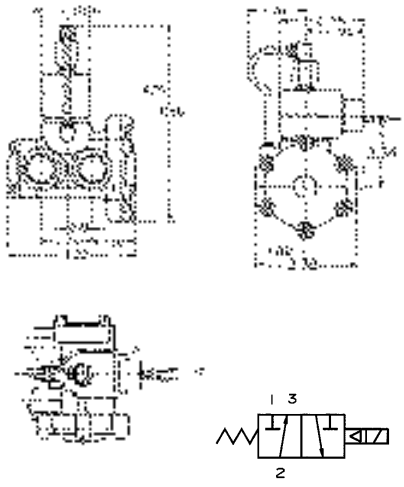

#43

Port Identification:
1-Pressure/ 2-Cylinder/ 3-Exhaust

7332 PILOT OPERATED BRASS VALVES–NORMALLY OPEN, NBR SEALS

Pipe Size NPT	Orifice Body NC (inch)	Orifice Body NO (inch)	Cv Factor NC	Cv Factor NO	Operating Pressure Differential (PSI) Min.*	Maximum AC Ratings 10 watt	Maximum AC Ratings 22 watt	Maximum DC Ratings 10 watt	Maximum DC Ratings 22 watt	Max. Fluid Temp. (F)	Pressure Vessel Catalog Number	UL/CSA** Approval	Const. Ref.
3/8”	3/8	3/8	2.1	2.1	10	180		180		185	73322BN3RNJ0	GP	124
	3/8	3/8	2.1	2.1	10	180		180		185	73322BN3RNJ1	GP	125
1/2”	1/2	1/2	3.6	3.6	10	180		180		185	73322BN4UNJ0	GP	124
	1/2	1/2	3.6	3.6	10	180		180		185	73322BN4UNJ1	GP	125
3/4”	3/4	3/4	7.3	7.3	10	180		180		185	73322BN52NJ0	GP	128
	3/4	3/4	7.3	7.3	10	180		180		185	73322BN52NJ1	GP	129

DRAWINGS

Valve	Dimension H	P	C	L	W	S	T	R	J	K
73322BN3RNJ1	4.89	3.98	1.96	2.97	2.62	0.65	0.59	1.44	1.22	0.91
73322BN4UNJ1	5.10	4.08	2.08	3.38	3.09	0.78	0.69	1.66	1.44	1.06

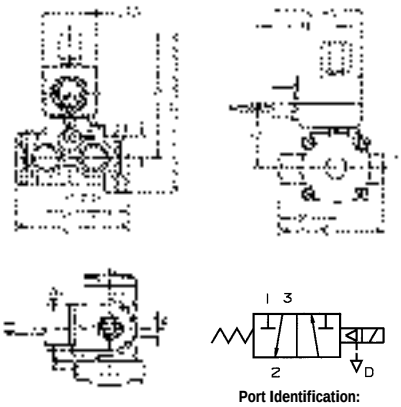

#125

Port Identification:
1-Exhaust/ 2-Cylinder/ 3-Pressure

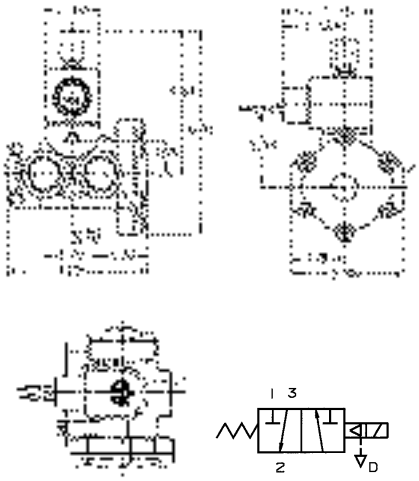

#129

Port Identification:
1-Exhaust/ 2-Cylinder/ 3-Pressure

Valve	Dimension H	P	C	L	W	T	R	J	K
73322BN3RNJ0	5.34	4.41	1.96	2.97	2.62	0.59	1.44	1.22	0.91
73322BN3UNJ0	5.62	4.56	2.08	3.38	3.09	0.69	1.66	1.41	1.06

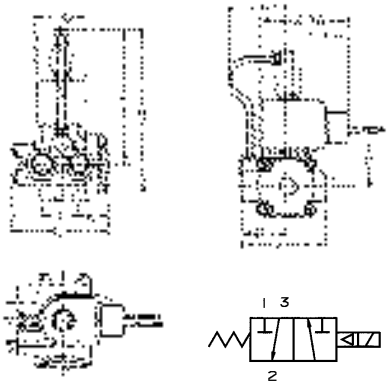

#124

Port Identification:
1-Exhaust/ 2-Cylinder/ 3-Pressure

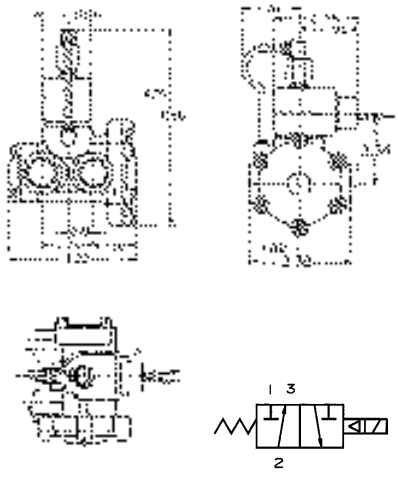

#128

Port Identification:
1-Exhaust/ 2-Cylinder/ 3-Pressure

7338 PILOT OPERATED BRASS VALVES – DIVERTING, NBR SEALS

Pipe Size NPT	Orifice Body NC (inch)	Orifice Body NO (inch)	Cv Factor NC	Cv Factor NO	Operating Pressure Differential (PSI) Min.*	Maximum AC Ratings 10 watt	Maximum AC Ratings 22 watt	Maximum DC Ratings 10 watt	Maximum DC Ratings 22 watt	Max. Fluid Temp. (F)	Pressure Vessel Catalog Number	UL/CSA** Approval	Const. Ref.
3/8”	3/8	3/8	2.1	2.1	10	180		180		185	73382BN3RNJ1	GP	126
1/2”	1/2	1/2	3.6	3.6	10	180		180		185	73382BN4UNJ1	GP	126
3/4”	3/4	3/4	7.3	7.3	10	180		180		185	73382BN52NJ1	GP	130

** Pilot operated valves require the minimum pressure differential specified for proper valve operation.*
***UL/CSA Approval Information: GP=General Purpose Blank=Not Approved*

See page 136 for additional agency approval information.

DRAWINGS

Valve	Dimension H	P	C	L	W	S	T	R	J	K
73382BN3RNJ1	4.89	3.98	1.96	2.97	2.62	0.65	0.59	1.44	1.22	0.91
73382BN4UNJ1	5.10	4.08	2.08	3.38	3.09	0.78	0.69	1.66	1.44	1.06

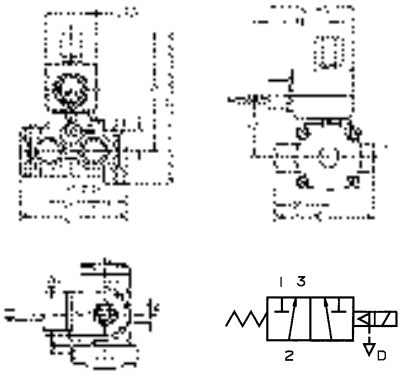

#126

Port Identification:
1-NC/ 2-IN/ 3-NO

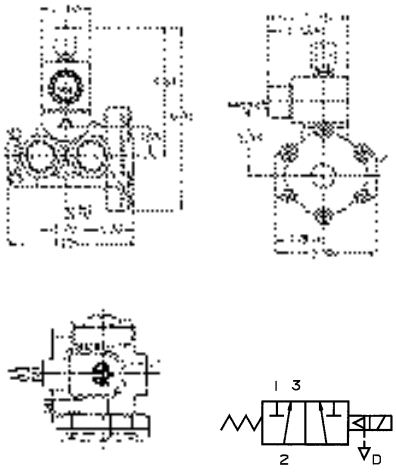

#130

Port Identification:
1-NC/ 2-IN/ 3-NO

External Pilot Pressure Valves

When an application requires the separation of the fluid in the main line from the pilot operator, it is necessary to control the pilot externally. Examples include:

- Controlling contaminated fluids up to 170 PSI.
- Controlling pressures below the minimum operating pressure of 10 PSI.
- Operating valves on vacuum.

For such applications, the following 3-way multipurpose valves are provided with connections for external pressure to operate the pilot. The minimum external pilot pressure required is the main line pressure plus 10 PSI. The maximum external pilot pressure is 180 PSI for pressure applications, and 165 PSI for vacuum applications.

For vacuum service the vacuum line must be connected to the normally open port, and pilot pressure must be connected to the normally closed pilot port.

7433 PILOT OPERATED BRASS VALVES (EXTERNAL PILOT PRESSURE) – MULTIPURPOSE, NBR SEALS

Pipe Size NPT	Orifice Body NC (inch)	Orifice Body NO (inch)	Cv Factor NC	Cv Factor NO	Operating Pressure Differential (PSI) Min.	Maximum AC Ratings 10 watt	Maximum AC Ratings 22 watt	Maximum DC Ratings 10 watt	Maximum DC Ratings 22 watt	Max. Fluid Temp. (F)	Pressure Vessel Catalog Number	UL/CSA* Approval	Const. Ref.
3/8”	3/8	3/8	2.1	2.1	0	170		170		185	74332BN3RNJ1	GP	127
1/2”	1/2	1/2	3.6	3.6	0	170		170		185	74332BN4UNJ1	GP	127
3/4”	3/4	3/4	7.3	7.3	0	170		170		185	74332BN52NJ1	GP	131

* *UL/CSA Approval Information: GP=General Purpose Blank=Not Approved*
See page 136 for additional agency approval information.

DRAWINGS

Valve	Dimension H	P	C	L	W	S	T	R	J	K
74332BN3RNJ1	4.72	3.79	1.96	2.97	2.62	0.65	0.59	1.44	1.22	0.91
74332BN4UNJ1	4.93	3.91	2.08	3.38	3.09	0.78	0.69	1.66	1.44	1.06

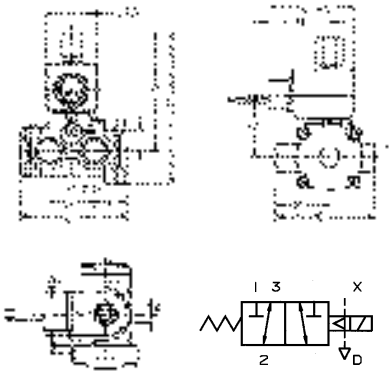

#127

Port Identification:
Pressure can be applied at either port.

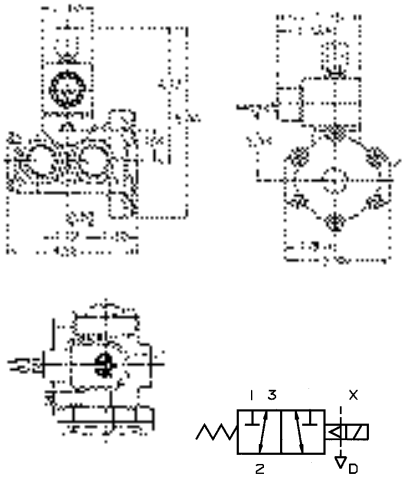

#131

Port Identification:
Pressure can be applied at either port.

SPECIFICATIONS

Mechanical Characteristics

Standard Materials of Construction

- Body–Stainless Steel (430F), Brass
- Seals–NBR
- Sleeve Tube–Stainless Steel (303 or 304)
- Plunger–Stainless Steel (430FR)
- Stop–Stainless Steel (430FR)
- Springs–Stainless Steel (18-8 or 17-7PH)
- Shading Ring–Copper
- Pilot Orifice–Stainless Steel (303)

Compatible Fluids

- Lubricated Air, Non-Lubricated Air, Inert Gases. Use of non-lubricated gaseous media will substantially limit valve life.

Electrical Characteristics

Voltages

- DC–12, 24
- AC–24/60, 110/50-120/60, 208/60, 220/50-240/60, 440/50-480/60 (other AC/DC voltages available upon request)

Agency Approvals

- UL and CSA approvals are available on valves with applicable coil/enclosure combinations. For additional information see page 136.

Miscellaneous

Maximum Ambient Temperature

- 10 watt AC/DC–150°F
- 22 watt AC/DC–77°F
- Fluxtron/Magnelatch–122°F

DIRECT ACTING BRASS VALVES–NORMALLY CLOSED, NBR SEALS

Pipe Size NPT	Orifice Body NC (inch)	Orifice Body NO (inch)	Orifice Sleeve Size (inch)	Cv Factor NC	Cv Factor NO	Operating Pressure Differential (PSI)					Max. Fluid Temp. (F)	Pressure Vessel Catalog Number	UL/CSA** Approval	Const. Ref.
						Min.*	Maximum							
							AC Ratings		DC Ratings					
							10 watt	22 watt	10 watt	22 watt				
1/4”	3/32	1/4	3/32	0.2	1.1	0	100		100		185	7131EBN2LN00	GP	45

DIRECT ACTING STAINLESS STEEL VALVES–NORMALLY CLOSED, NBR SEALS

Pipe Size NPT	Orifice Body NC (inch)	Orifice Body NO (inch)	Orifice Sleeve Size (inch)	Cv Factor NC	Cv Factor NO	Operating Pressure Differential (PSI)					Max. Fluid Temp. (F)	Pressure Vessel Catalog Number	UL/CSA** Approval	Const. Ref.
						Min.*	Maximum							
							AC Ratings		DC Ratings					
							10 watt	22 watt	10 watt	22 watt				
1/8”	3/64	1/8	3/32	0.052	0.35	0	250		250		185	71313SN1EN00	GP	46
	3/64	1/8	3/32	0.052	0.35	0	250		250		185	71313SN1ENJ1	GP	46
	1/16	1/8	3/32	0.09	0.35	0	200		200		185	71313SN1GN00	GP	46
	1/16	1/8	3/32	0.09	0.35	0	200		200		185	71313SN1GNJ1	GP	46
	3/32	1/8	3/32	0.11	0.35	0	125		125		185	71313SN1KN00	GP	46
	3/32	1/8	3/32	0.11	0.35	0	125		125		185	71313SN1KNJ1	GP	46
	1/8	1/8	3/32	0.13	0.35	0	90		90		185	71313SN1MN00	GP	46
	1/8	1/8	3/32	0.13	0.35	0	90		90		185	71313SN1MNJ1	GP	46
1/4”	3/64	1/8	3/32	0.052	0.35	0	250		250		185	71313SN2EN00	GP	46
	3/64	1/8	3/32	0.052	0.35	0	250		250		185	71313SN2ENJ1	GP	46
	1/16	1/8	3/32	0.09	0.35	0	200		200		185	71313SN2GN00	GP	46
	1/16	1/8	3/32	0.09	0.35	0	200		200		185	71313SN2GNJ1	GP	46
	3/32	1/8	3/32	0.11	0.35	0	125		125		185	71313SN2KN00	GP	46
	3/32	1/8	3/32	0.11	0.35	0	125		125		185	71313SN2KNJ1	GP	46
	1/8	1/8	3/32	0.13	0.35	0	90		90		185	71313SN2MN00	GP	46
	1/8	1/8	3/32	0.13	0.35	0	90		90		185	71313SN2MNJ1	GP	46

* *The valves operate at 0 PSI, however a 2 PSI minimum pressure differential is required to actuate the pressure operated quick exhaust poppet.*

***UL/CSA Approval Information: GP=General Purpose Blank=Not Approved*
See page 136 for additional agency approval information.

DRAWINGS

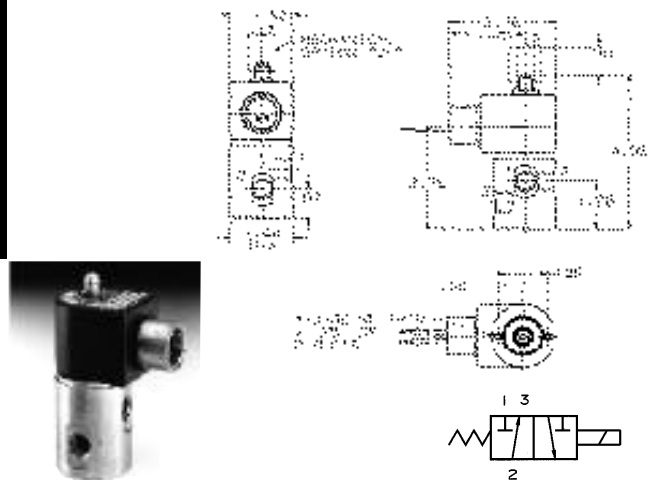

#46

Port Identification:
1-Pressure/ 2-Cylinder/ 3-Exhaust

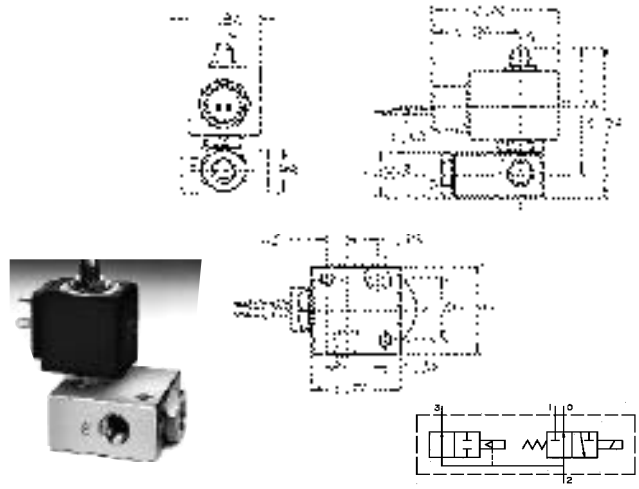

#45

Port Identification:
1-Pressure/ 2-Cylinder/ 3-Exhaust

SPECIFICATIONS

Mechanical Characteristics

Standard Materials of Construction

- Body–Brass, Stainless Steel (430F)
- Seals FKM, PCTFE, NBR, Ruby as listed
- Sleeve Tube–Stainless Steel (304)
- Plunger–Stainless Steel (430FR)
- Stop–Stainless Steel (430FR)
- Springs–Stainless Steel (18-8)
- Shading Ring–Copper
- Pilot Orifice–Stainless Steel (303)

Compatible Fluids

- All common media including air, inert gases, hydraulic fluids, petroleum products, freons, water, steam and corrosive media. Use of non-lubricated gaseous media will substantially limit valve life.
  Note: Use with steam, water, and some petroleum products normally requires plunger assembly insert modification. Refer to Technical Information section for fluid compatibility.

Electrical Characteristics

Voltages

- DC–12, 24
- AC–24/60, 110/50-120/60, 208/60, 220/50-240/60, 440/50-480/60 (other AC/DC voltages available upon request)

Agency Approvals

- UL and CSA approvals are available on valves with applicable coil/enclosure combinations. For additional information see page 136.

Miscellaneous

Maximum Ambient Temperature

- 10 watt AC/DC–150°F
- 22 watt AC/DC–77°F
- Fluxtron/Magnelatch–122°F

DIRECT ACTING BRASS VALVES–NORMALLY CLOSED, PCTFE OR RUBY SEALS

Pipe Size NPT	Orifice Body NC (inch)	Orifice Body NO (inch)	Cv Factor NC	Cv Factor NO	Operating Pressure Differential (PSI) Min.	Maximum AC Ratings 10 watt	Maximum AC Ratings 22 watt	Maximum DC Ratings 10 watt	Maximum DC Ratings 22 watt	Max.* Fluid Temp. (F)	Pressure Vessel Catalog Number	UL/CSA** Approval	Const. Ref.
1/4”	1/32	1/32	0.02	0.02	0	580		580		165	7131KBN2BF00	GP	117
	1/32	1/32	0.02	0.02	0	1100		1100		210	7131KBN2BR00	GP	117
	3/64	1/16	0.055	0.11	0	435		435		210	7131KBN2ER00	GP	117

DIRECT ACTING BRASS VALVES–MULTIPURPOSE, FKM SEALS

Pipe Size NPT	Orifice Body NC (inch)	Orifice Body NO (inch)	Cv Factor NC	Cv Factor NO	Operating Pressure Differential (PSI) Min.	Maximum AC Ratings 10 watt	Maximum AC Ratings 22 watt	Maximum DC Ratings 10 watt	Maximum DC Ratings 22 watt	Max.* Fluid Temp. (F)	Pressure Vessel Catalog Number	UL/CSA** Approval	Const. Ref.
1/4”	1/32	1/32	0.02	0.02	0	435		435		185	7133KBN2BVJ1	GP	117

DIRECT ACTING STAINLESS STEEL VALVES–MULTIPURPOSE, NBR SEALS

Pipe Size NPT	Orifice Body NC (inch)	Orifice Body NO (inch)	Cv Factor NC	Cv Factor NO	Operating Pressure Differential (PSI) Min.	Maximum AC Ratings 10 watt	Maximum AC Ratings 22 watt	Maximum DC Ratings 10 watt	Maximum DC Ratings 22 watt	Max.* Fluid Temp. (F)	Pressure Vessel Catalog Number	UL/CSA** Approval	Const. Ref.
1/8”	1/32	1/32	0.024	0.024	0	400		400		185	71335SN1ANJ1	GP	121
1/4”	1/32	1/32	0.024	0.024	0	400		400		185	71335SN2ANJ1	GP	121

** Maximum fluid temperatures are provided for Class F coils. Valves with Ruby or FKM seals (letter ‘R’ or ‘V’ in 10th position of pressure vessel number) can be used at fluid temperatures up to 240°F on DC and 250°F on AC provided a Class H coil is used.*

***UL/CSA Approval Information: GP=General Purpose Blank=Not Approved*
See page 136 for additional agency approval information.

DRAWINGS

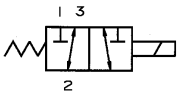

#121

Port Identification:
Pressure can be applied at either port.

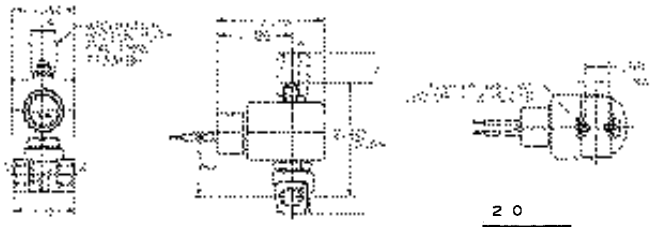

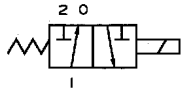

NORMALLY CLOSED
Port Identification:
1-Cylinder/ 2-Pressure/ 0-Exhaust

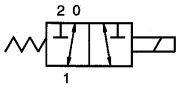

MULTIPURPOSE
Port Identification:
Pressure can be applied at either port.

#117

SPECIFICATIONS

Mechanical Characteristics

Standard Materials of Construction

- Body – Brass or Stainless Steel (430)
- Seals – NBR or FKM seals as listed
- Sleeve Tube – Stainless Steel (303 or 304)
- Plunger – Stainless Steel (430FR)
- Shading Ring – Copper
- Stop – Stainless Steel (430FR)
- Springs – Stainless Steel (18-8)
- Pilot Orifice – Stainless Steel (303)

Compatible Fluids

- Depending on the valve used, most common media including air, inert gases or petroleum products.

Electrical Characteristics

Voltages

- DC – 12, 24
- AC – 110/50-120/60, 220/50-240/60

Power Consumption

- 10, 22 watts

Agency Approvals

- cUL approval.

Miscellaneous

Maximum Ambient Temperature

- 131°F

DIRECT ACTING STAINLESS STEEL VALVES – NORMALLY CLOSED, NBR OR FKM SEALS

Pipe Size NPT	Orifice Size (inch)	Cv Factor	Operating Pressure Differential (PSI) Min.*	Maximum AC Ratings 10 watt	Maximum AC Ratings 22 watt	Maximum DC Ratings 10 watt	Maximum DC Ratings 22 watt	No-Voltage Release Pressure Vessel Number	Electrically Tripped Pressure Vessel Number	Const. Ref.
1/4”	3/64 x 3/32	0.062 x 0.17	0	200			200	70315SN2ENVR	70315SN2ENET	25
	1/16 x 3/32	0.11 x 0.17	0	150			150	70315SN2GVVR	70315SN2GVET	25
	3/32 x 3/32	0.17 x 0.17	0	90			90	70315SN2KVVR	70315SN2KVET	25
	1/8 x 3/32	0.23 x 0.17	0	60			60	70315SN2MNVR	70315SN2MNET	25

PILOT OPERATED BRASS VALVES – NORMALLY CLOSED, NBR SEALS

Pipe Size NPT	Orifice Size (inch)	Cv Factor	Operating Pressure Differential (PSI) Min.*	Maximum AC Ratings 10 watt	Maximum AC Ratings 22 watt	Maximum DC Ratings 10 watt	Maximum DC Ratings 22 watt	No-Voltage Release Pressure Vessel Number	Electrically Tripped Pressure Vessel Number	Const. Ref.
3/8”	3/8	2.1	10	180			180	70312BN3RNVR	70312BN3RNET	25
1/2”	1/2	3.6	10	180			180	70312BN4UNVR	70312BN4UNET	25
3/4”	3/4	7.3	10	180			180	70312BN52NVR	70312BN52NET	25

DIRECT ACTING STAINLESS STEEL VALVES – NORMALLY OPEN, NBR SEALS

Pipe Size NPT	Orifice Size (inch)	Cv Factor	Operating Pressure Differential (PSI) Min.*	Maximum AC Ratings 10 watt	Maximum AC Ratings 22 watt	Maximum DC Ratings 10 watt	Maximum DC Ratings 22 watt	No-Voltage Release Pressure Vessel Number	Electrically Tripped Pressure Vessel Number	Const. Ref.
1/4”	1/16 x 3/32	0.095 x 0.17	0	150			150	70325SN2GNVR	70325SN2GNET	25

PILOT OPERATED BRASS VALVES – NORMALLY OPEN, NBR SEALS

Pipe Size NPT	Orifice Size (inch)	Cv Factor	Operating Pressure Differential (PSI) Min.*	Maximum AC Ratings 10 watt	Maximum AC Ratings 22 watt	Maximum DC Ratings 10 watt	Maximum DC Ratings 22 watt	No-Voltage Release Pressure Vessel Number	Electrically Tripped Pressure Vessel Number	Const. Ref.
3/8”	5/8	2.1	10	180			180	70322BN3RNVR	70322BN3RNET	25
1/2”	1/2	3.6	10	180			180	70322BN4UNVR	70322BN4UNET	25
3/4”	3/4	7.3	10	180			180	70322BN52NVR	70322BN52NET	25

DIRECT ACTING BRASS VALVES – UNIVERSAL ALL-PORTS-IN-BODY, FKM SEALS

Pipe Size NPT	Orifice Size (inch)	Cv Factor	Operating Pressure Differential (PSI) Min.*	Maximum AC Ratings 10 watt	Maximum AC Ratings 22 watt	Maximum DC Ratings 10 watt	Maximum DC Ratings 22 watt	No-Voltage Release Pressure Vessel Number	Electrically Tripped Pressure Vessel Number	Const. Ref.
1/4”	5/64 x 5/64	0.14 x 0.14	0	100			100	7033TBN2JVVR	7033TBN2JVET	25
1/4”	1/8 x 1/8	0.23 x 0.23	0	50			50	7033TBN2NVVR	7033TBN2NVET	25

** Pilot operated valves require the minimum pressure differential specified for proper valve operation.*

DIRECT ACTING 303 STAINLESS STEEL VALVES – UNIVERSAL ALL-PORTS-IN-BODY, FKM SEALS**

Pipe Size NPT	Orifice Size (inch)	Cv Factor	Operating Pressure Differential (PSI) Min.*	Maximum AC Ratings 10 watt	Maximum AC Ratings 22 watt	Maximum DC Ratings 10 watt	Maximum DC Ratings 22 watt	No-Voltage Release Pressure Vessel Number	Electrically Tripped Pressure Vessel Number	Const. Ref.
1/4”	1/16 x 1/16	0.095 x 0.095	0	150			150	7033TVN2GVVR	7033TVN2GVET	25
1/4”	5/64 x 5/64	0.14 x 0.14	0	100			100	7033TVN3JVVR	7033TVN2JVET	25
1/4”	1/8 x 1/8	0.23 x 0.23	0	50			50	7033TVN2NVVR	7033TVN2NVET	25

* *All wetted parts are stainless steel, FKM and plastic.*

DIRECT ACTING 316L STAINLESS STEEL VALVES – INTRINSICALLY SAFE, NBR SEALS

Pipe Size NPT	Orifice Size (inch)	Cv Factor	Operating Pressure Differential (PSI) Min.*	Maximum AC Ratings 10 watt	Maximum AC Ratings 22 watt	Maximum DC Ratings 10 watt	Maximum DC Ratings 22 watt	No-Voltage Release Pressure Vessel Number	Electrically Tripped Pressure Vessel Number	Const. Ref.
1/4’	3/16	0.53	0	145			145	U033X51560860N7+		25

\+ *Includes coil*

DRAWINGS

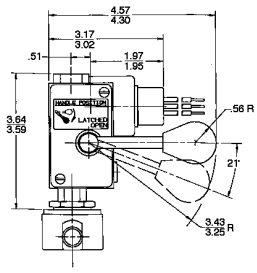

Dimension	No-Voltage Release	Electrically Tripped
A	4.64	4.40
B	4.31	4.07
C	1.79	1.59
D	3.26	3.06

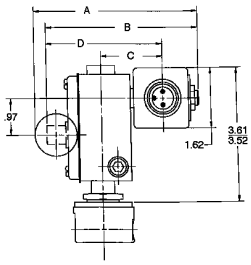

#25

SKINNER 7000 Series Remote Pressure Operated Three-Way Remote Operated Valves

SPECIFICATIONS

Mechanical Characteristics

Standard Materials of Construction

- Body–Brass
- Diaphragm Seal–NBR/PTFE
- Seals–NBR
- Springs–Stainless Steel (18-8)
- Pilot Orifice–Stainless Steel (303)

Compatible Fluids

- Lubricated Air, Non-Lubricated Air, Inert Gases, Water, Hydraulic Fluids, Petroleum Products and additional fluids compatible with materials of construction.

REMOTE PRESSURE OPERATED VALVES–DUAL PURPOSE

Pipe Size NPT	Orifice Body NC (inch)	Orifice Body NO (inch)	Cv Factor NC	Cv Factor NO	Pressure Vessel Catalog Number	Const. Ref.
3/8”	3/8	3/8	2.1	2.1	75332BN3RN00	47
1/2”	1/2	1/2	3.6	3.6	75332BN4UN00	47
3/4”	3/4	3/4	7.3	7.3	75332BN52N00	48

Note that these valves do not feature an electrical operator, therefore no enclosure and coil selection is necessary.

REMOTE OPERATED VALVE PORT CONNECTIONS

Valve Type	Main Line Supply	Connections For Remote Valve				3-Way Pilot Valve Hookup		
		Normally Closed Port	Normally Open Port	Common Port	Pilot Inlet Port* 1/8” NPT	Normally Closed Port	Normally Open Port	Common Port
Normally Open	0-180 PSIG	Media Exhaust	Media Inlet	Cylinder	Connect to Common Port of 3-Way Pilot	Main Line Pressure +10 PSI Minimum	Pilot Exhaust	1/8” NPT Pilot of Remote Control Valve
	Vacuum	Atmosphere	Vacuum	Cylinder		10 PSI Minimum	Vacuum	
Normally Closed	0-180 PSIG	Media Inlet	Media Exhaust	Cylinder		Main Line Pressure +10 PSI Minimum	Pilot Exhaust	
	Vacuum	Vacuum	Atmosphere	Cylinder		10 PSI Minimum	Vacuum	
Directional Control	0-180 PSIG	Media Outlet	Media Outlet	Media Inlet		Main Line Pressure +10 PSI Minimum	Pilot Exhaust	
	Vacuum	Inlet	Inlet	Vacuum		10 PSIG Minimum	Vacuum	

* *To assure long, trouble free life, the Pilot IN to main pressure should not exceed 200 PSIG.*

DRAWINGS

Valve	Dimension H	P	L	W	S	T	R	J	K
75332BN3RN00	2.43	1.49	2.97	2.62	0.65	0.59	1.44	1.22	0.91
75332BN4UN00	2.67	1.61	3.38	3.09	0.78	0.69	1.66	1.41	1.06

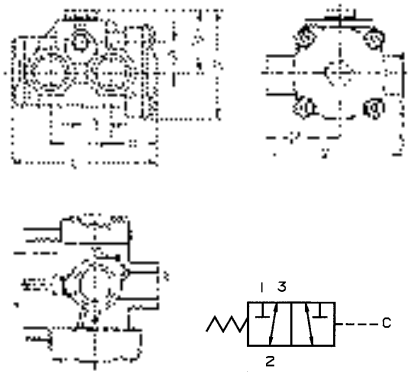

#47

Port Identification:
Pressure can be applied at either port.

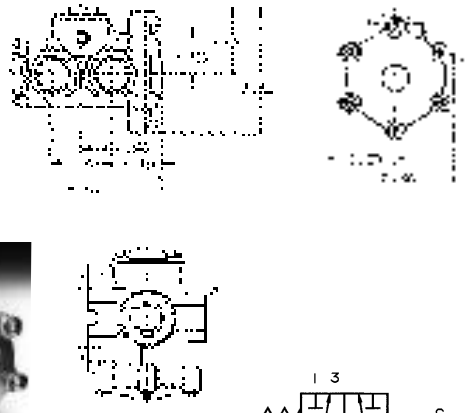

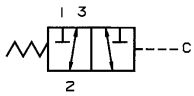

#48

Port Identification:
Pressure can be applied at either port.

SKINNER 3000 Series Three-Way Direct Acting Valves

SPECIFICATIONS

Mechanical Characteristics

Standard Materials of Construction

- Body–Brass or Stainless Steel (303)
- Seals–NBR, FKM, Ethylene Propylene, CR
- Sleeve Assembly–305 Stainless Steel (tube-flange), 430F Stainless Steel (stop)
- Plunger–430F Stainless Steel
- Manifold Body–Aluminum
- Flux Plate–Plated Steel
- Housing–Plated Steel
- Integrated Coil Encapsulant–Nylon

Compatible Fluids

- Air, inert gas, water, oil

Vacuum

- Up to 5 microns depending on application

Electrical Characteristics

Voltages

- DC–6, 12, 24
- AC–24, 50/60, 110/50-120/60, 220/50-240/60

Power Consumption

- 6 watts, 7.5 for 24/60
- 3 watts

Agency Approvals

- UL and CSA component recognition.

Miscellaneous

Maximum Ambient Temperature

- 68°F for continuous duty cycle.

Response Time

- 8 to 16 milliseconds to open or close.

Duty Cycle

- Continuous duty, 600 cycles per minute.

Weight

- 8 oz.

Mounting

- Two 8-32 tapped holes in bottom of valve body supplied standard. A universal mounting bracket B19-006 is also available.

DIRECT ACTING BRASS AND STAINLESS STEEL VALVES–NORMALLY CLOSED

Pipe Size NPT	Body Orifice Size (inch)	Body Cv Factor	Sleeve Orifice Size (inch)	Sleeve Cv Factor	Maximum Operating Pressure Differential (PSI)		Brass Pressure Vessel Catalog Number	Stainless Steel Pressure Vessel Catalog Number
					6 watt	3 watt*		
1/8”	1/32	0.03	1/32	0.03	200	-	3131BBN1AN00	3131BSN1AN00
	3/64	0.05	3/64	0.05	150	-	3131BBN1EN00	3131BSN1EN00
	1/16	0.09	1/16	0.09	100	-	3131BBN1GN00	3131BSN1GN00
	5/64	0.13	1/16	0.09	80	50	3131BBN1JN00	3131BSN1JN00
	3/32	0.18	1/16	0.09	60	35	3131BBN1LN00	3131BSN1LN00
	1/8	0.24	1/16	0.09	40	20	3131BBN1NN00	3131BSN1NN00
	5/32	0.30	1/16	0.09	10	10	3131BBN1QN00	3131BSN1QN00

DIRECT ACTING BRASS AND STAINLESS STEEL VALVES–NORMALLY OPEN

Pipe Size NPT	Body Orifice Size (inch)	Body Cv Factor	Sleeve Orifice Size (inch)	Sleeve Cv Factor	Maximum Operating Pressure Differential (PSI)		Brass Pressure Vessel Catalog Number	Stainless Steel Pressure Vessel Catalog Number
					6 watt	3 watt*		
1/8”	1/32	0.03	1/32	0.03	160	-	3139BBN1AN00	3139BSN1AN00
	3/64	0.05	3/64	0.05	125	-	3139BBN1EN00	3139BSN1EN00
	1/16	0.09	1/16	0.09	100	-	3139BBN1GN00	3139BSN1GN00
	5/64	0.13	1/16	0.09	80	-	3139BBN1JN00	3139BSN1JN00
	3/32	0.18	1/16	0.09	60	-	3139BBN1LN00	3139BSN1LN00
	1/8	0.24	1/16	0.09	40	-	3139BBN1NN00	3139BSN1NN00
	5/32	0.30	1/16	0.09	10	-	3139BBN1QN00	3139BSN1QN00

DIRECT ACTING BRASS AND STAINLESS STEEL VALVES–MULTIPURPOSE

Pipe Size NPT	Body Orifice Size (inch)	Body Cv Factor	Sleeve Orifice Size (inch)	Sleeve Cv Factor	Maximum Operating Pressure Differential (PSI)		Brass Pressure Vessel Catalog Number	Stainless Steel Pressure Vessel Catalog Number
					6 watt	3 watt*		
1/8”	1/32	0.03	1/32	0.03	150	95	3133BBN1AN00	3133BSN1AN00
	3/64	0.05	3/64	0.05	100	60	3133BBN1EN00	3133BSN1EN00
	1/16	0.09	1/16	0.09	80	20	3133BBN1GN00	3133BSN1GN00
	5/64	0.13	1/16	0.09	60	8	3133BBN1JN00	3133BSN1JN00
	3/32	0.18	1/16	0.09	35	-	3133BBN1LN00	3133BSN1LN00
	1/8	0.24	1/16	0.09	20	-	3133BBN1NN00	3133BSN1NN00
	5/32	0.30	1/16	0.09	10	-	3133BBN1QN00	3133BSN1QN00

DIRECT ACTING BRASS AND STAINLESS STEEL VALVES–DIRECTIONAL CONTROL

Pipe Size NPT	Body Orifice Size (inch)	Body Cv Factor	Sleeve Orifice Size (inch)	Sleeve Cv Factor	Maximum Operating Pressure Differential (PSI)		Brass Pressure Vessel Catalog Number	Stainless Steel Pressure Vessel Catalog Number
					6 watt	3 watt*		
1/8”	1/32	0.03	1/32	0.03	230	-	3138BBN1AN00	3138BSN1AN00
	3/64	0.05	3/64	0.05	160	-	3138BBN1EN00	3138BSN1EN00
	1/16	0.09	1/16	0.09	120	-	3138BBN1GN00	3138BSN1GN00
	5/64	0.13	1/16	0.09	80	-	3138BBN1JN00	3138BSN1GN00
	3/32	0.18	1/16	0.09	60	-	3138BBN1LN00	3138BSN1LN00
	1/8	0.24	1/16	0.09	35	-	3138BBN1NN00	3138BSN1NN00
	5/32	0.30	1/16	0.09	20	-	3138BBN1QN00	3138BSN1QN00

Performance Ratings Apply to All Voltages, Coil Constructions, Seal and Body Materials.

* *When ordering a pressure vessel with a 3 watt coil the second digit must be a 9. Example: 3931BBN1JN00 is a 3-way normally closed pressure vessel for use with 3 watt coils.*

MANIFOLD ASSEMBLED VALVES–NORMALLY CLOSED, COMMON INLET PRESSURE UNDER SEAT

Body Orifice Size (inch)	Body Cv Factor	Sleeve Orifice Size (inch)	Sleeve Cv Factor	Maximum Operating Pressure Differential (PSI)		Cavity Manifold Assembly Catalog Number	Screw-In Manifold Assembly Catalog Number
				6 watt	3 watt*		
3/64	0.05	3/64	0.05	150	-	3131BJA7ENC#	3131BSA6EN00
1/16	0.09	1/16	0.09	100	-	3131BJA7GNC#	3131BSA6GN00
1/8	0.24	1/16	0.09	40	20	-	3131BSA6NN00
5/32	0.30	1/16	0.09	10	10	-	3131BSA6QN00

MANIFOLD ASSEMBLED VALVES–NORMALLY OPEN, COMMON INLET PRESSURE UNDER SEAT

Body Orifice Size (inch)	Body Cv Factor	Sleeve Orifice Size (inch)	Sleeve Cv Factor	Maximum Operating Pressure Differential (PSI)		Cavity Manifold Assembly Catalog Number	Screw-In Manifold Assembly Catalog Number
				6 watt	3 watt*		
3/64	0.05	3/64	0.05	125	-	3139BJA7ENC#	3139BSA6EN00
1/16	0.09	1/16	0.09	100	-	3139BJA7GNC#	3139BSA6GN00
1/8	0.24	1/16	0.09	40	-	-	3139BSA6NN00
5/32	0.30	1/16	0.09	10	-	-	3139BSA6QN00

MANIFOLD ASSEMBLED VALVES–MULTIPURPOSE, COMMON INLET PRESSURE UNDER SEAT

Body Orifice Size (inch)	Body Cv Factor	Sleeve Orifice Size (inch)	Sleeve Cv Factor	Maximum Operating Pressure Differential (PSI)		Cavity Manifold Assembly Catalog Number	Screw-In Manifold Assembly Catalog Number
				6 watt	3 watt*		
3/64	0.05	3/64	0.05	100	60	3133BJA7ENC#	3133BSA6EN00
1/16	0.09	1/16	0.09	80	20	3133BJA7GNC#	3133BSA6GN00
1/8	0.24	1/16	0.09	20	-	-	3133BSA6NN00
5/32	0.30	1/16	0.09	10	-	-	3133BSA6QN00

MANIFOLD ASSEMBLED VALVES–DIRECTIONAL CONTROL, COMMON INLET PRESSURE OVER SEAT

Body Orifice Size (inch)	Body Cv Factor	Sleeve Orifice Size (inch)	Sleeve Cv Factor	Maximum Operating Pressure Differential (PSI)		Cavity Manifold Assembly Catalog Number	Screw-In Manifold Assembly Catalog Number
				6 watt	3 watt*		
3/64	0.05	3/64	0.05	160	-	3138BJA7ENC#	3138BSA6EN00
1/16	0.09	1/16	0.09	120	-	3138BJA7GNC#	3138BSA6GN00
1/8	0.24	1/16	0.09	35	-	-	3138BSA6NN00
5/32	0.30	1/16	0.09	20	-	-	3138BSA6QN00

* *When ordering a pressure vessel with a 3 watt coil the second digit must be a 9. Example: 3931BSA6NN00 is a 3-way normally closed pressure vessel for use with 3 watt coils. Performance Ratings Apply to All Voltages, Coil Constructions, Seal and Body Materials. Screw-in body available in stainless steel only.*

\# *Denotes the number of valves in the manifold, from 2 to 4. Screw-in manifolds and valves sold separately. Kit #V1-22-028 available to join manifolds when more than 4 stations required.*

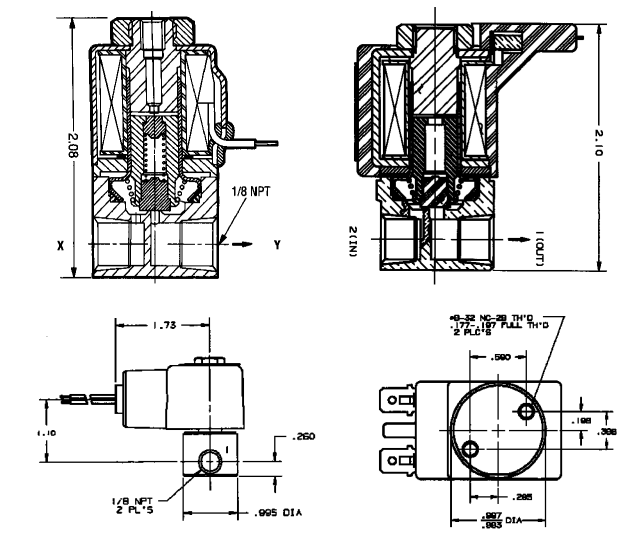

#27

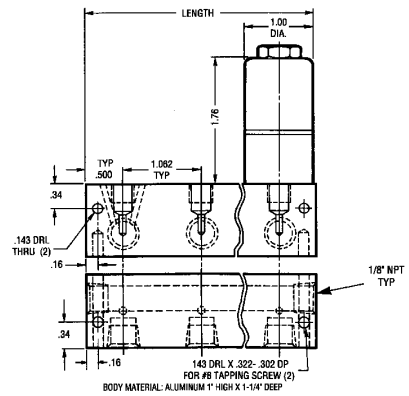

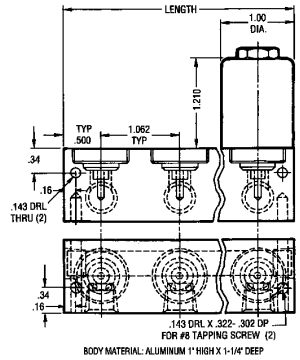

#28

Screw-In Manifolds	Common Port	Pressure Direction	Number of Stations		
			2	3	4
3WNC (3131)	Inlet	Under Seat	300-40-022	300-40-023	300-40-024
3WDIR (3138)	Common	Over Seat	300-40-015	300-40-016	300-40-017

SKINNER B-Series General Purpose Three-Way Direct Acting Valves

SPECIFICATIONS

Mechanical Characteristics

Standard Materials of Construction

- Body–Stainless Steel (303)
- Seals–FKM
- Sleeve–304 Stainless Steel
- Plunger–430F Stainless Steel
- Stop–430 FR Stainless Steel
- Springs–Stainless Steel (18-8)
- Shading Ring–Copper (AC only)
- Orifice 303 Stainless Steel

Compatible Fluids

- Lubricated Air, Non-Lubricated Air, Inert Gases, Water, Steam, Hydraulic Fluids, Petroleum Products, Freons, and additional fluids compatible with materials of construction.

Minimum Operating Pressure Differential

- 0 PSI

Electrical Characteristics

Voltages

- DC–12, 24, 120
- AC–24/60, 120/60, 240/60 (other voltages available upon request)

Power Consumption

- 7 watts

Agency Approvals

- UL and CSA approvals are generally available on valves with applicable coil/enclosure combinations. For details consult Skinner Valve.

Miscellaneous

Vacuum

- Down to 5 microns (0.005 torr, 2x10-4 in Hg)

Operating Speed

- Up to 800 cycles per minute

Response Time

- AC–Approximately 4-8 milliseconds to open or close.
- DC–Approximately 10-15 milliseconds to open, 6-12 milliseconds to close.

B13 DIRECT ACTING STAINLESS STEEL VALVES–NORMALLY CLOSED, FKM SEALS

Pipe Size	Orifice Diameter		Cv Factor		Maximum Operating Pressure Differential (PSI) (AC & DC)	Class A Taped Coil		Const. Ref.	Class B Taped 1/2" NPT Conduit*	Const. Ref.
	Inlet Port	Exh. Port	Inlet Port	Exh. Port		Grommet Enclosure	1/4" NPT Conduit			
1/8" NPT	1/32	1/32	0.019	0.019	200	B13DK1200	B13DM1200	132	B13TME1200	49
	3/64	3/64	0.048	0.052	150	B13DK1150	B13DM1150	132	B13TME1150	49
	1/16	3/64	0.085	0.052	100	B13DK1100	B13DM1100	132	B13TME1100	49
	3/32	3/32	0.16	0.13	40	B13DK1040	B13DM1040	132	B13TME1040	49

B13A DIRECT ACTING STAINLESS STEEL VALVES–NORMALLY CLOSED EXHAUST TO ATMOSPHERE, FKM SEALS

1/8" NPT	1/32	1/32	0.019	0.019	200	B13ADK1200	B13ADM1200	133	B13ATME1200	50
	3/64	3/64	0.048	0.052	150	B13ADK1150	B13ADM1150	133	B13ATME1150	50
	1/16	3/64	0.085	0.052	100	B13ADK1100	B13ADM1100	133	B13ATME1100	50
	3/32	3/32	0.16	0.13	40	B13ADK1040	B13ADM1040	133	B13ATME1040	50

B14 DIRECT ACTING STAINLESS STEEL VALVES–MULTIPURPOSE, FKM SEALS

1/8"	1/32	1/32	0.019	0.019	150	B14DK1150	B14DM1150	132	B14TME1150	49
	3/64	3/64	0.048	0.052	100	B14DK1100	B14DM1100	132	B14TME1100	49
	1/16	3/64	0.085	0.052	75	B14DK1075	B14DM1075	132	B14TME1075	49
	3/32	3/32	0.16	0.13	30	B14DK1030	B14DM1030	132	B14TME1030	49

B15 DIRECT ACTING STAINLESS STEEL VALVES–NORMALLY OPEN, FKM SEALS

1/8"	1/32	1/32	0.019	0.019	200	B15DK1200	B15DM1200	132	B15TME1200	49
	3/64	3/64	0.052	0.048	150	B15DK1150	B15DM1150	132	B15TME1150	49
	3/64	1/16	0.052	0.085	125	B15DK1125	B15DM1125	132	B15TME1125	49
	3/32	3/32	0.16	0.13	40	B15DK1040	B15DM1040	132	B15TME1040	49

B16 DIRECT ACTING STAINLESS STEEL VALVES–DIRECTIONAL CONTROL, FKM SEALS

1/8" NPT	1/32	1/32	0.019	0.019	250	B16DK1250	B16DM1250	132	B16TME1250	49
	3/64	3/64	0.048	0.052	200	B16DK1200	B16DM1200	132	B16TME1200	49
	1/16	3/64	0.085	0.052	175	B16DK1175	B16DM1175	132	B16TME1175	49
	3/32	3/32	0.16	0.13	50	B16DK1050	B16DM1050	132	B16TME1050	49

* *Note: B Series valves with Class B taped coils and 1/2" NPT conduit are UL approved.*

Valve Options & Accessories

Optional Features	Option Code
Molded Class B leaded coil	LB
Molded Class B tab coil	TB
Molded Class H leaded coil	LH
Yoke	ET
Slotted enclosure for molded coils	EB

Accessories	Part No.
Universal mounting bracket	B19-006
Wrench nut	B99-007

For ordering instructions see Ordering Information section on page 10.

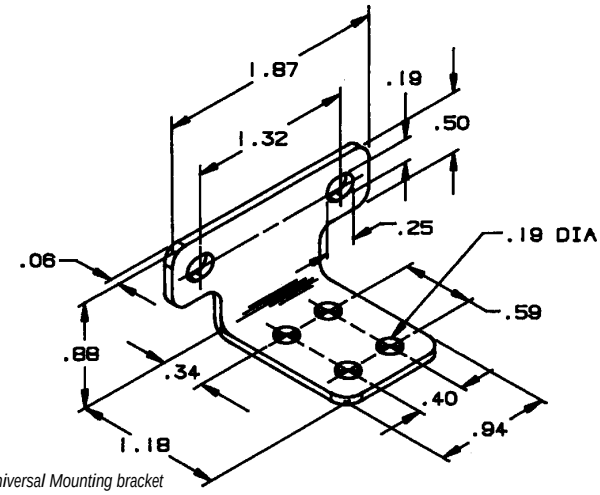

Universal Mounting bracket

DRAWINGS

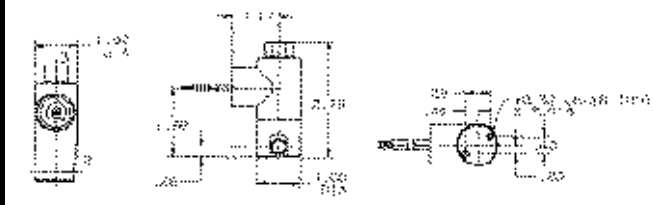

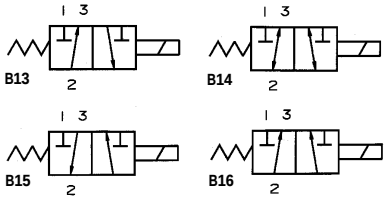

Port Identification:

B13	B14	B15	B16
1-IN	NC	Exhaust	NC
2-Cylinder	Common	Cylinder	IN
3-Exhaust	NO	IN	NO

#49

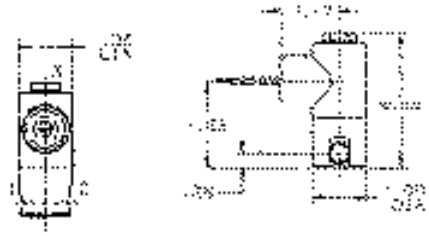

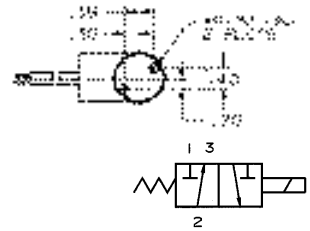

Port Identification:
1-IN/ 2-Cylinder/ 3*-Exhaust
(* not marked)

#50

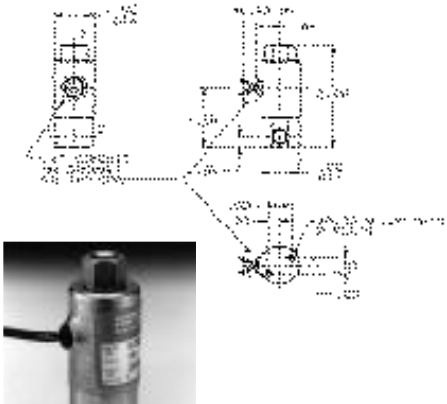

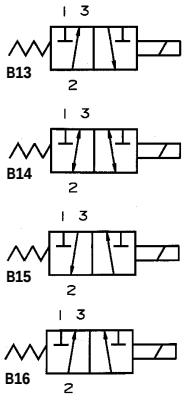

Port Identification:

B13	B14	B15	B16
1-IN	NC	Exhaust	NC
2-Cylinder	Common	Cylinder	IN
3-Exhaust	NO	IN	NO

#132

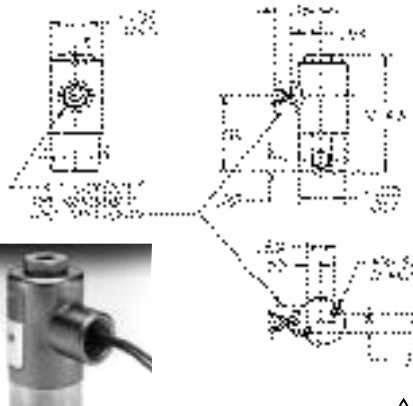

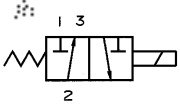

Port Identification:
1-IN/ 2-Cylinder/ 3*-Exhaust
(* not marked)

#133

SKINNER C-Series General Purpose Three-Way Direct Acting Valves

SPECIFICATIONS

Mechanical Characteristics

Standard Materials of Construction

- Body–Brass (Stainless Steel available)
- Seals–FKM, EPDM available
- Sleeve–304 Stainless Steel
- Plunger–430FR Stainless Steel
- Stop–430 FR Stainless Steel
- Springs–Stainless Steel (18-8)
- Shading Ring–Copper (AC only)
- Orifice–Brass, Stainless Steel

Compatible Fluids

- Lubricated Air, Non-Lubricated Air, Inert Gases, Water, Steam, Hydraulic Fluids, Petroleum Products, Freons, and additional fluids compatible with materials of construction. Note: Use with Steam and some Petroleum Products may require plunger seal material. modification. Consult Skinner Valve to specify a suitable material.

Minimum Operating Pressure Differential

- 0 PSI

Pipe Sizes

- 1/8" NPT dry seal. 1/8" BSP also available.

Electrical Characteristics

Voltages

- DC–12, 24, 120
- AC–24/60, 120/60, 240/60 (other voltages available upon request)

Power Consumption

- 8 watts

Agency Approvals

- UL and CSA approvals are generally available on valves with applicable coil/enclosure combinations. For details consult Skinner Valve.

Miscellaneous

Vacuum

- Down to 5 microns (0.005 torr, 2x10-4 in Hg)

Operating Speed

- Up to 600 cycles per minute

Response Time

- AC–Approximately 4-8 milliseconds to open or close.
- DC–Approximately 10-15 milliseconds to open, 6-12 milliseconds to close.

C3 DIRECT ACTING BRASS VALVES–NORMALLY CLOSED, FKM SEALS

NPT Pipe Size	Orifice Diameter		Cv Factor		Maximum Operating Pressure Differential (PSI)		Class A Taped Coil		Const. Ref.
	Inlet Port	Exh. Port	Inlet Port	Exh. Port	AC	DC	Grommet Enclosure	1/2" NPT Conduit	
1/8"	3/64	1/16	0.05	0.09	175	175	C3DK1175	C3DM1175	51
	1/16	1/16	0.09	0.09	125	125	C3DK1125	C3DM1125	51
	3/32	3/32"	0.18	0.18	75	75	C3DK1075	C3DM1075	51
	1/8	3/32	0.26	0.18	50	50	C3DK1050	C3DM1050	51

C3A DIRECT ACTING BRASS VALVES–NORMALLY CLOSED EXHAUST TO ATMOSPHERE, FKM SEALS

NPT Pipe Size	Orifice Diameter		Cv Factor		Maximum Operating Pressure Differential (PSI)		Class A Taped Coil		Const. Ref.
	Inlet Port	Exh. Port	Inlet Port	Exh. Port	AC	DC	Grommet Enclosure	1/2" NPT Conduit	
1/8"	3/64	1/16	0.05	0.09	175	175	C3ADK1175	C3ADM1175	52
	1/16	1/16	0.09	0.09	125	125	C3ADK1125	C3ADM1125	52
	3/32	3/32	0.18	0.18	75	75	C3ADK1075	C3ADM1075	52
	1/8"	3/32	0.26	0.18	50	50	C3ADK1050	C3ADM1050	52

C4 DIRECT ACTING BRASS VALVES–MULTIPURPOSE, FKM SEALS

NPT Pipe Size	Orifice Diameter		Cv Factor		Maximum Operating Pressure Differential (PSI)		Class A Taped Coil		Const. Ref.
	Inlet Port	Exh. Port	Inlet Port	Exh. Port	AC	DC	Grommet Enclosure	1/2" NPT Conduit	
1/8"	3/64	3/64	0.05	0.05	150	150	C4DK1150	C4DM1150	51
	1/16	1/16	0.09	0.09	75	75	C4DK1075	C4DM1075	51
	3/32	3/32	0.18	0.18	50	-	C4DK1052	C4DM1052	51
	3/32	3/32	0.18	0.18	-	30	C4DK1031	C4DM1031	51

C5 DIRECT ACTING BRASS VALVES–NORMALLY OPEN, FKM SEALS

NPT Pipe Size	Orifice Diameter		Cv Factor		Maximum Operating Pressure Differential (PSI)		Class A Taped Coil		Const. Ref.
	Inlet Port	Exh. Port	Inlet Port	Exh. Port	AC	DC	Grommet Enclosure	1/2" NPT Conduit	
1/8"	3/64	1/16	0.05	0.09	175	175	C5DK1175	C5DM1175	51
	1/16	3/32	0.09	0.15	100	100	C5DK1100	C5DM1100	51
	3/32	1/8	0.18	0.26	60	60	C5DK1060	C5DM1060	51

Valve Options & Accessories

Optional Features	Option Code
Molded Class F leaded coil	LF
Molded Class F tab coil	TF
Molded Class H leaded coil	LH
Yoke	ET
Single automotive terminal	EH
Double automotive terminal	EV
Strain relief connector	EJ
Enclosure w/ bracket	GD
Main stream metering	RM

Accessories	Part No.
Universal mounting bracket	V5-2158M
Wrench nut	V0-233
Metered exhaust adapter (air only-type C3 valves)	V5-1024

For ordering instructions see Ordering Information section on page 10.

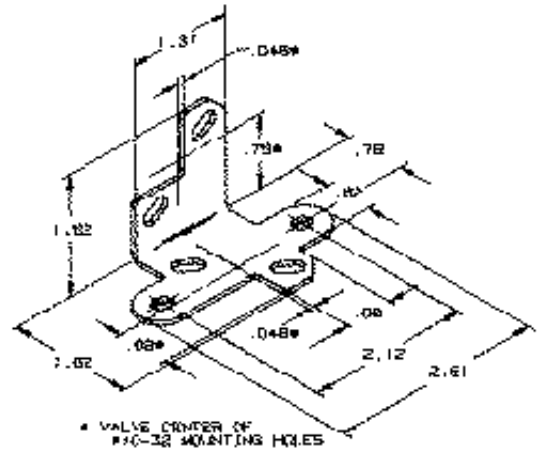

Universal Mounting bracket

DRAWINGS

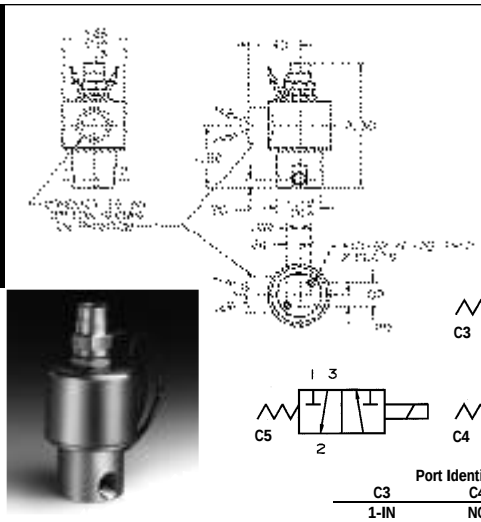

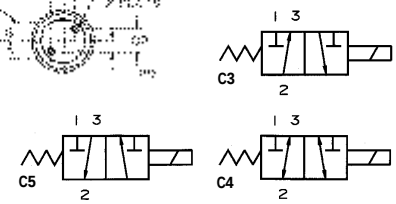

Port Identification:

C3	C4	C5
1-IN	NC	Exhaust
2-Cylinder	Common	Cylinder
3-Exhaust	NO	IN

#51

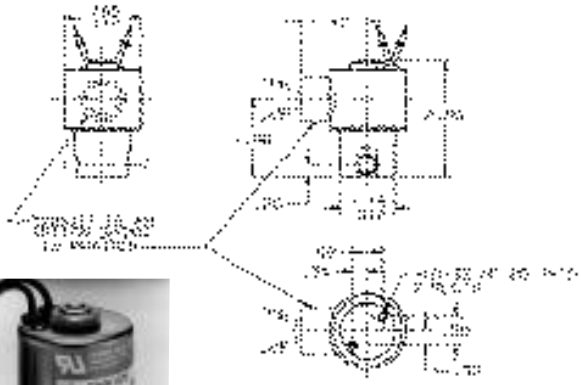

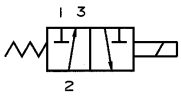

Port Identification:
1-IN/ 2-Cylinder/ 3*-Exhaust
(* not marked)

#52

SKINNER A-Series General Purpose Three-Way Direct Acting Valves

SPECIFICATIONS

Mechanical Characteristics

Standard Materials of Construction

- Body–Zinc
- Seals–NBR
- Sleeve–304 Stainless Steel
- Plunger–430FR Stainless Steel
- Stop–430 FR Stainless Steel
- Springs–Stainless Steel (18-8)
- Shading Ring–Copper (AC only)
- Orifice–Stainless Steel (303)

Compatible Fluids

- Lubricated Air, Non-Lubricated Air, Oils, Inert Gases, and additional fluids compatible with materials of construction.

Minimum Operating Pressure Differential

- 0 PSI

Pipe Sizes

- 1/8" NPT dry seal. 1/8" BSP also available.

Electrical Characteristics

Voltages

- DC–12, 24, 120
- AC–24/60, 120/60, 240/60 (other voltages available upon request)

Power Consumption

- 16 watts AC, 14 watts DC

Miscellaneous

Vacuum

- Down to 5 microns (0.005 torr, 2x10-4 in Hg)

Operating Speed

- Up to 300 cycles per minute

Response Time

- AC–Approximately 4-8 milliseconds to open or close.
- DC–Approximately 10-15 milliseconds to open, 6-12 milliseconds to close.

A3 DIRECT ACTING VALVES–NORMALLY CLOSED, NBR SEALS

Pipe Size		Orifice Diameter			Maximum Operating Pressure Differential (PSI)			
Body NPT	Sleeve NPT	Inlet Port	Outlet Port	Cv Factor	AC	DC	Class B Molded 1/2" NPT Conduit	Const. Ref.
1/4"	1/8	3/32	3/32	0.21	250		A3LB2252	53
		3/32	3/32	0.21	-	250	A36LB2251	53
		1/8	1/8	0.35	175	-	A3LB2177	53
		1/8	1/8	0.35	-	175	A36LB2176	53
		5/32	5/32	0.45	125	-	A3LB2127	53
		5/32	5/32	0.45	-	125	A36LB2126	53

A4 DIRECT ACTING VALVES–MULTIPURPOSE, NBR SEALS

Pipe Size		Orifice Diameter			Maximum Operating Pressure Differential (PSI)			
Body NPT	Sleeve NPT	Inlet Port	Outlet Port	Cv Factor	AC	DC	Class B Molded 1/2" NPT Conduit	Const. Ref.
1/4"	1/8	3/32	3/32	0.21	150	-	A4LB2152	53
		3/32	3/32	0.21	-	150	A46LB2151	53
		1/8	1/8	0.35	100	-	A4LB2102	53
		1/8	1/8	0.35	-	100	A46LB2101	53
		5/32"	5/32	0.45	75	-	A4LB2077	53
		5/32	5/32	0.45	-	75	A46LB2076	53

A5 DIRECT ACTING VALVES–NORMALLY OPEN, NBR SEALS

Pipe Size		Orifice Diameter			Maximum Operating Pressure Differential (PSI)			
Body NPT	Sleeve NPT	Inlet Port	Outlet Port	Cv Factor	AC	DC	Class B Molded 1/2" NPT Conduit	Const. Ref
1/4"	1/8	3/32	3/32	0.21	250	-	A5LB2252	53
		3/32	3/32	0.21	-	250	A56LB2251	53
		1/8	1/8	0.35	175	-	A5LB2177	53
		1/8	1/8	0.35	-	175	A56LB2176	53
		5/32	5/32	0.45	125	-	A5LB2127	53
		5/32	5/32	0.45	-	125	A56LB2126	53

A6 DIRECT ACTING VALVES – DIRECTIONAL CONTROL, NBR SEALS

Pipe Size		Orifice Diameter		Cv	Maximum Operating Pressure Differential (PSI)		Class B Molded	Const.
Body NPT	Sleeve NPT	Inlet Port	Outlet Port	Factor	AC	DC	1/2” NPT Conduit	Ref
1/4”	1/8	3/32	3/32	0.21	250	-	A6LB2252	53
		3/32	3/32	0.21	-	250	A66LB2251	53
		1/8	1/8	0.35	175	-	A6LB2177	53
		1/8	1/8	0.35	-	175	A66LB2176	53
		5/32	5/32	0.45	125	-	A6LB2127	53
		5/32	5/32	0.45	-	125	A66LB2126	53

DRAWINGS

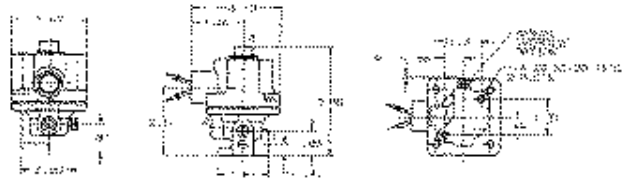

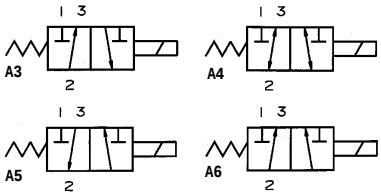

Port Identification:

A3	A4	A5	A6
1-IN	NC	Exhaust	NC
2-Cylinder	Common	Cylinder	IN
3-Exhaust	NO	IN	NO

#53

Valve Options & Accessories

Optional Features	Option Code
Manual Override	RZ

For ordering instructions see Ordering Information section on page 10.

Four-Way Valve Contents

SKINNER 7000 Series General Purpose Four-Way Pilot Operated Valves

SPECIFICATIONS

Mechanical Characteristics

Standard Materials of Construction

- Body–Aluminum Alloy, Zinc Alloy (epoxy coated)
- Seals–NBR
- Sleeve Tube–Stainless Steel (303)
- Plunger–Stainless Steel (430FR)
- Stop–Stainless Steel (430FR)
- Springs–Stainless Steel (18-8)
- Shading Rings–Copper
- Pilot Orifice–Stainless Steel (303)

Compatible Fluids

- Lubricated Air, Non-Lubricated Air, Inert Gases. Use of non-lubricated gaseous media will substantially limit valve life.

Electrical Characteristics

Voltages

- DC–12, 24
- AC–24/60, 110/50-120/60, 208/60, 220/50-240/60, 440/50-480/60 (other AC/DC voltages available upon request)

Agency Approval

- UL and CSA approvals are available on valves with applicable coil/enclosure combinations. For additional information see page 136.

Miscellaneous

Maximum Ambient Temperature

- 10 watt AC/DC–150°F
- 22 watt AC/DC–77°F
- Fluxtron/Magnelatch–122°F

7341 PILOT OPERATED VALVES–NBR SEALS

Pipe Size NPT	Orifice Size (inch)	Cv Factor	Operating Pressure Differential (PSI) Min.	Maximum AC Ratings 10 watt	Maximum AC Ratings 22 watt	Maximum DC Ratings 10 watt	Maximum DC Ratings 22 watt	MAX. Fluid Temp. (F)	Pressure Vessel Number	UL/CSA* Approval	Const. Ref.
1/8”	5/32	0.35	15	150		150		165	7341LAN1HNM0	GP	54
1/4”	5/16	1.4	15	150		150		165	7341LMN2NNM0	GP	55

* *GP=General Purpose Valves. See page 136 for additional agency approval information.*

DRAWINGS

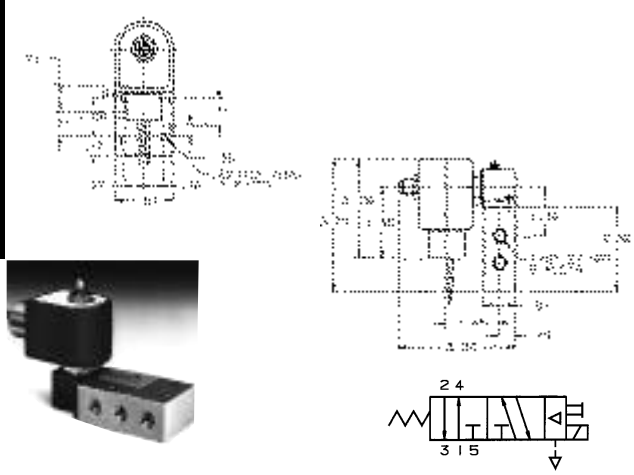

Port Identification:

Pressure	Cyl. A	Exh. A	Cyl. B	Exh. B
1	2	3	4	5

#54

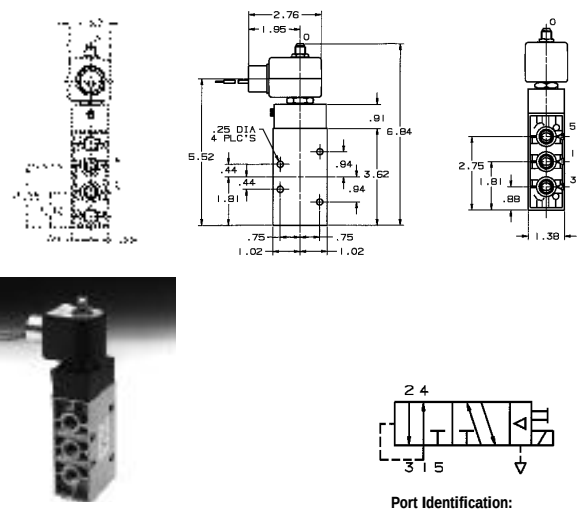

Port Identification:

Pressure	Cyl. A	Exh. A	Cyl. B	Exh. B
1	2	3	4	5

#55

SKINNER 7000 Series General Purpose Four-Way Pilot and Manually Operated Valves

SPECIFICATIONS

Mechanical Characteristics

Standard Materials of Construction

- Body–Aluminum
- Seals–NBR
- Spool–Aluminum
- Sleeve Tube–Stainless Steel (304)
- Plunger–Stainless Steel (430FR)
- Stop–Stainless Steel (430FR)
- Springs–Stainless Steel (18-8)
- Shading Rings–Copper

Compatible Fluids

- Lubricated Air, Non-Lubricated Air, Inert Gases. Use of non-lubricated gaseous media will substantially limit valve life.

Electrical Characteristics

Voltages

- DC–12, 24
- AC–24/60, 110/50-120/60, 208/60, 220/50-240/60, 440/50-480/60 (other AC/DC voltages available upon request)

Agency Approval

- UL and CSA approvals are available on valves with applicable coil/enclosure combinations. For additional information see page 136.

Miscellaneous

Maximum Ambient Temperature

- 10 watt AC/DC–150°F
- 22 watt AC/DC–77°F
- Fluxtron/Magnelatch–122°F

7341 PILOT OPERATED ALUMINUM SOLENOID OPERATED VALVES–NBR SEALS

Pipe Size NPT	Orifice Size (inch)	Cv Factor	Operating Pressure Differential (PSI) Min.*	Maximum AC Ratings 10 watt	Maximum AC Ratings 22 watt	Maximum DC Ratings 10 watt	Maximum DC Ratings 22 watt	MAX. Fluid Temp. (F)	Pressure Vessel Number	UL/CSA** Approval	Const. Ref.
1/4”	1/4	1	15	150		150		165	73419AN2NN00	GP	56
	1/4	1	15	150		150		165	73419AN2NNM0	GP	56

* *When valves have not been cycled for a period of time or when they are first used the minimum operating pressure will range from 15 to 30 PSI. This is caused by displacement of the lubricant at the point of contact between the spool and O-ring seals which increase friction. After the spool has been cycled a few times the system will become completely lubricated, thus reducing friction so that operation at the rated minimum pressure differential is possible.*

** *GP=General Purpose Valves. See page 136 for additional agency approval information.*

7541 REMOTE AIR PILOT OPERATED ALUMINUM VALVE–NBR SEALS

Pipe Size NPT	Orifice Size (inch)	Cv Factor	Operating Pressure Differential (PSI) Min.	Operating Pressure Differential (PSI) Max.	Pressure Vessel Number	Const. Ref.
1/4"	1/4	1	*	150	75419AN2NN00	57

* *Remote pilot pressure to operate the valve = 20 PSI + 1/3 (main line pressure)*

DRAWINGS

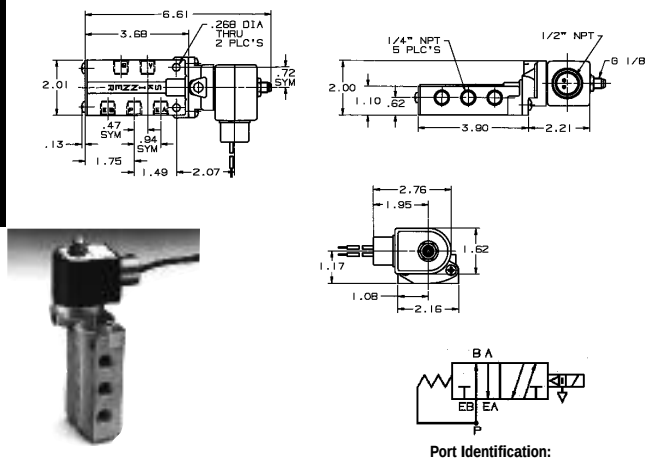

Port Identification:

Pressure	Cyl. A	Exh. A	Cyl. B	Exh. B
P	A	EA	B	EB

#56

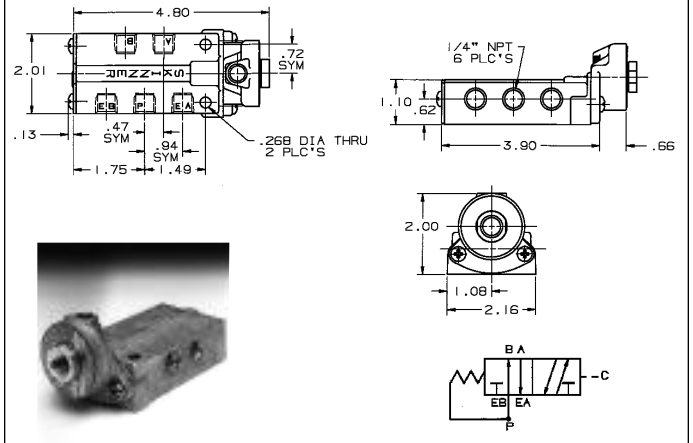

Port Identification:

Pressure	Cyl. A	Exh. A	Cyl. B	Exh. B
P	A	EA	B	EB

#57

Hand Lever Operated Valves

Two-position spool valves are available with no spring return, spring return with cylinder A port open, or spring return with cylinder B port open. Spring return models require the operator to move the handle in one direction and hold it to provide the function. The no-spring model will remain in either position without holding.

A three-position spool valve is available with all ports closed in its normal position. The handle is moved and held in one direction to open one cylinder port and to the opposite direction to open the other cylinder port. The spool is spring centered and the handle is normally in the center or upright position.

Pipe Size NPT	Orifice Size (inch)	Cv Factor	Operating Pressure Differential (PSI) Minimum	Maximum	Catalog Number	Const. Ref.
1/4"	1/4	1	0	150	76419AN2NNCA	58
	1/4	1	0	150	76419AN2NNCB	58
	1/4	1	0	150	76429AN2NN00	58
	1/4	1	0	150	76469AN2NN00	58

Types of Operation

Valve 76419AN2NNCA: Two-position, Spring Return, cylinder "A" Open. On this valve cylinder "A" is open to the pressure inlet. To open cylinder "B" to pressure, the lever must be moved toward the valve and held in this position. Once released, the spring will return the spool to open cylinder "A".

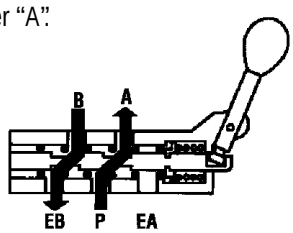

Valve 76419AN2NNCB: Two-position, Spring Return, cylinder "B" Open. On this valve, cylinder "B" is open to the pressure inlet. To open cylinder "A" to pressure, the lever must be moved away from the valve and held in this position. Once released, the spring will return the spool to open cylinder "B".

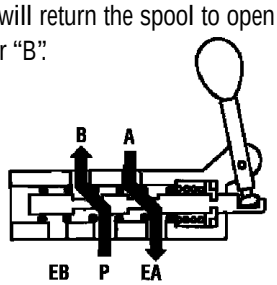

Valve 76429AN2NN00: Three-Position, Spring Centered, All Ports Closed. On this model the spring and retainers are designed so that the spool is centered, all ports are closed, and the hand lever is in the center position. When the lever is moved toward the valve and held, cylinder "B" is open to pressure and cylinder "A" is open to exhaust. When the lever is moved away from the valve and held, cylinder "A" is open to pressure and cylinder "B" is open to exhaust.

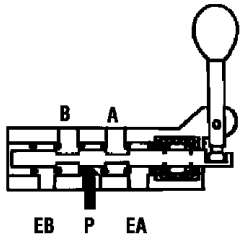

Valve 76469AN2NN00: Two-position No Spring Return. Permits the operator to open cylinder "B" to pressure and cylinder "A" to exhaust when the lever is moved forward, and to reverse the process when the lever is moved in the opposite direction. Since there is no spring, the spool can be left in either position.

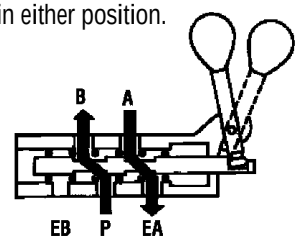

DRAWINGS

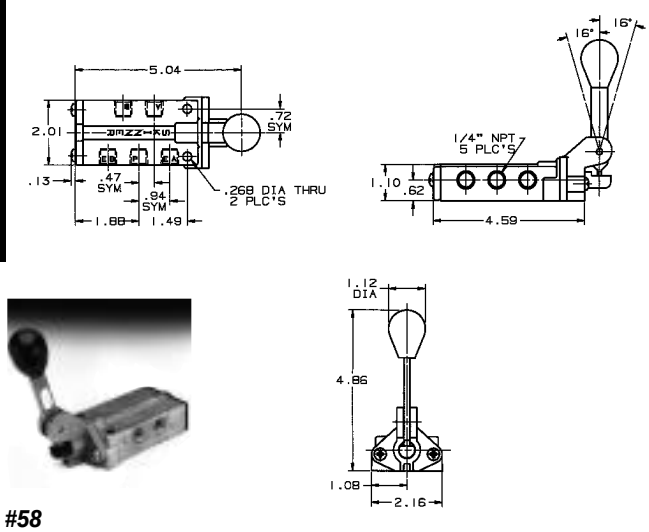

#58

SKINNER 7000 Series General Purpose Four-Way Pilot Operated Valves

SPECIFICATIONS

Mechanical Characteristics

Standard Materials of Construction

- Body–Brass or 303 Stainless Steel
- Seals–NBR
- Spool–Thermoplastic
- Cages–Thermoplastic
- Sleeve Tube–Stainless Steel (304)
- Plunger–Stainless Steel (430FR)
- Stop–Stainless Steel (430FR)
- Springs–Stainless Steel (18-8 or 17-4)
- Filter–Polyethylene

Compatible Fluids

- Lubricated Air, Non-Lubricated Air, Inert Gases and other gases compatible with materials of construction.

Electrical Characteristics

Voltages

- DC–12, 24
- AC–24/60, 110/50-120/60, 220/50-240/60 (other voltages available upon request)

Agency Approval

- UL approvals are available on valves with applicable coil/enclosure combinations. For additional information see page 136.

Miscellaneous

Minimum Ambient Temperature

- -40°F(-40°C)
  Dew point must be more than 7°F below ambient.

Maximum Ambient Temperature

- 10 watt AC/DC–150°F
- 22 watt AC/DC–77°F
- Fluxtron/Magnelatch–122°F

7341, 7347 PILOT OPERATED BRASS OR STAINLESS STEEL VALVES NBR SEALS

Pipe Size NPT	Orifice Size (inch)	Cv Flow Factor	Operating Pressure Differential (PSI) Min.*	Maximum AC Ratings 10 watt	Maximum AC Ratings 22 watt	Maximum DC Ratings 10 watt	Maximum DC Ratings 22 watt	MAX. Fluid Temp. (F)	Brass Pressure Vessel Catalog Number	Stainless Pressure Vessel Catalog Number	UL/CSA** Approval	Const. Ref.
Single Solenoid												
1/4”	11/64	0.55	30	150		150		167	73417BN2KN00	73417VN2KN00	GP	135
	1/4	1.2	30	150		150		167	73417BN2PN00	73417VN2PN00	GP	135
1/2”	5/8	4.0	30	150		150		167	73417BN4UN00	-	GP	137
Double Solenoid												
1/4”	11/64	0.55	30	150		150		167	73477BN2KN00	73477VN2KN00	GP	136
	1/4	1.2	30	150		150		167	73477BN2PN00	73477VN2PN00	GP	136
1/2”	5/8	4.0	30	150		150		167	73477BN4UN00	-	GP	137

** Pilot operated valves require the minimum pressure differential specified for proper valve operation.*

*** GP=General Purpose Valves. See page 136 for additional agency approval information.*

DRAWINGS

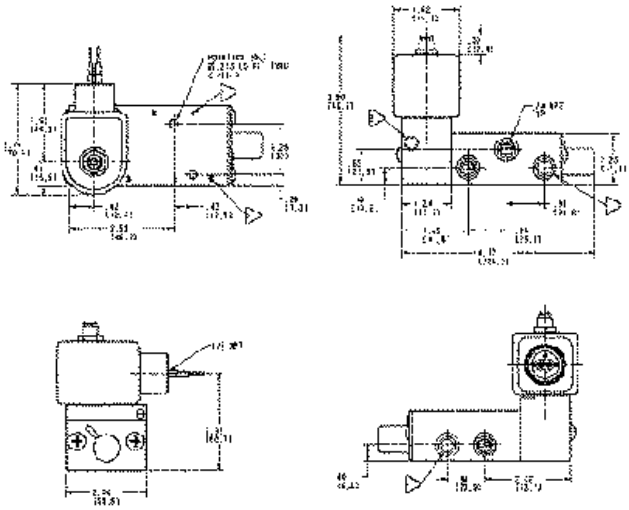

#135

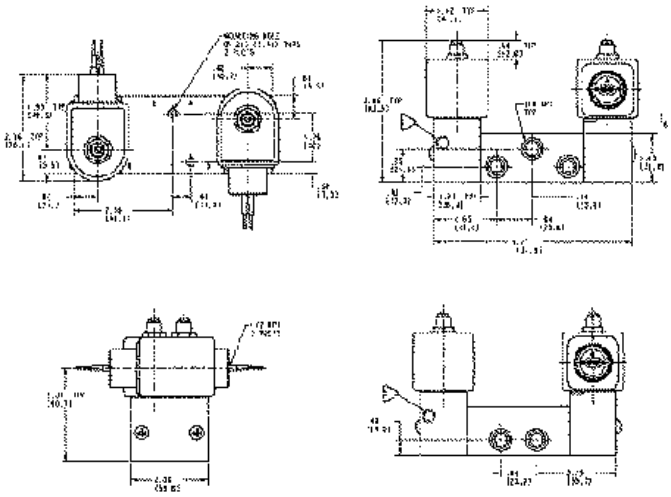

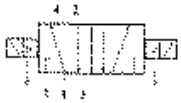

#136

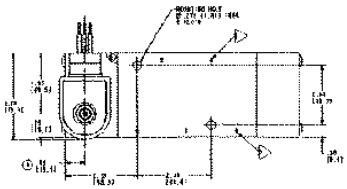

#137

Four-Way Solenoid Valves

SKINNER 7000 Series Manual Reset Four-Way Pilot Operated Valves

SPECIFICATIONS

Mechanical Characteristics

Standard Materials of Construction

- Body–Brass or Stainless Steel (430)
- Seals–NBR seals
- Sleeve Tube–Stainless Steel (303 or 304)
- Plunger–Stainless Steel (430FR)
- Shading Ring–Copper
- Stop–Stainless Steel (430FR)
- Springs–Stainless Steel (18-8)
- Pilot Orifice–Stainless Steel (303)

Compatible Fluids

- Depending on the valve used, most common media including air, inert gases or petroleum products.

Electrical Characteristics

Voltages

- DC–12, 24
- AC–110/50-120/60, 220/50-240/60

Power Consumption

- 10 watts

Agency Approvals

- cUL approval.

Miscellaneous

Maximum Ambient Temperature

- 131°F

PILOT OPERATED ALUMINUM VALVES–NBR SEALS

Pipe Size NPT	Orifice (inch)	Cv Factor	Operating Pressure Differential (PSI) (PSI) Min.*	Maximum AC Ratings 10 watt	Maximum AC Ratings 22 watt	Maximum DC Ratings 10 watt	Maximum DC Ratings 22 watt	Max. Fluid Temp. (F)	No-Voltage Release Pressure Vessel Number	Electrically Tripped Pressure Vessel Number	Const. Ref.
1/4”	1/4	1	15	150			150	165	70419AN2NNVR	70419AN2NNET	25

* *Pilot operated valves require the minimum pressure differential specified for proper valve operation.*

** *GP=General Purpose Valves. See page 136 for additional agency approval information.*

DRAWINGS

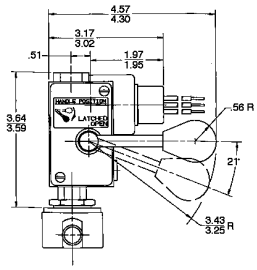

Dimension	No-Voltage Release	Electrically Tripped
A	4.64	4.40
B	4.31	4.07
C	1.79	1.59
D	3.26	3.06

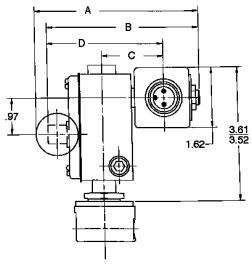

#25

SKINNER V-9 Series Four-Way Pilot Operated Valves

SPECIFICATIONS

Mechanical Characteristics

Standard Materials of Construction

- Body–Zinc
- Seals–NBR
- Sleeve–Stainless Steel (304)
- Plunger–Stainless Steel (430FR)
- Shading Ring–Copper (AC & DC only)
- Stop–Stainless Steel (430FR)
- Springs–Stainless Steel (18-8)
- Orifice–Stainless Steel (303)

Compatible Fluids

- Lubricated Air, Non-Lubricated Air, Inert Gases, Hydraulic Fluids, and additional fluids compatible with materials of construction.

Electrical Characteristics

Voltages

- DC–12, 24, 120
- AC–24/60, 120/60, 240/60 (other voltages available upon request)

Power Consumption

- 10 watts per coil (2 coils)

Agency Approvals

- UL and CSA approvals are generally available on valves with applicable coil/enclosure combinations. For details, please consult Skinner Valve.

Miscellaneous

Operating Speed

- Up to 600 cycles per minute.

Response Time

- AC–Approximately 4-8 milliseconds to open or close.
- DC–Approximately 10-15 milliseconds to open, 6-12 milliseconds to close.

V933 Four-Way Normally Closed–Normally Closed Valves

When de-energized, both inlet ports are closed by the two plungers preventing flow from the common inlet through both of the valves. The cylinder port in each valve is open to the common exhaust, permitting flow from the cylinders to the exhaust. When the coils are energized, both valve plungers rise, opening the inlet orifices, and at the same time closing the orifices in the sleeves. This stops flow from the cylinder ports to the exhaust, and permits flow from the inlet to the cylinder ports.

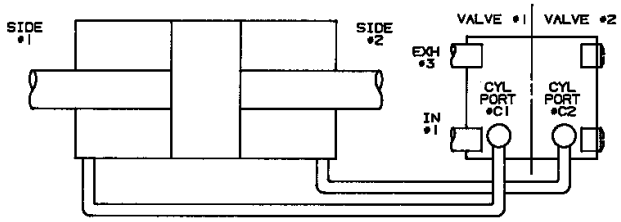

Typical Cylinder Operation with V933 Valves.
Both coils de-energized–The inlet pressure is closed to both sides of a double-acting cylinder. Side #1 and side #2 of the cylinder are open to exhaust through cylinder ports #C1 and #C2. The piston can be shifted manually.

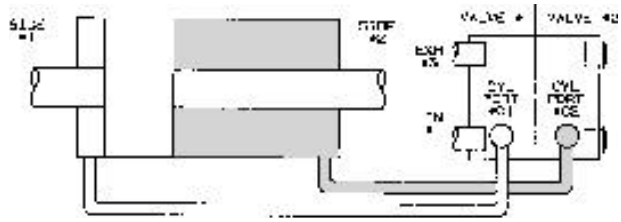

Coil of valve #1 de-energized; coil of valve #2 energized–The inlet pressure is closed off to side #1 of the double-acting cylinder; the exhaust is open through cylinder port #C1. Side #2 of the cylinder is closed to the exhaust and open to inlet pressure through cylinder port #C2. The piston moves to the left.

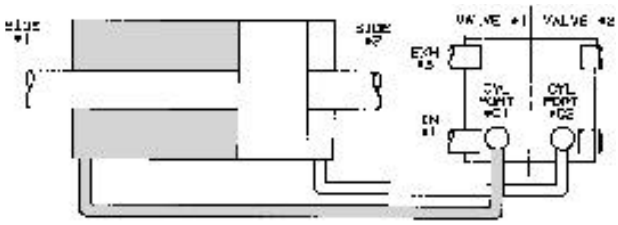

Coil of valve #1 energized; coil of valve #2 de-energized–The inlet pressure is open to side #1 of the double-acting cylinder through cylinder port #C1, the exhaust is closed off by the plunger insert. Side #2 of the cylinder is open to exhaust through cylinder port #C2, the inlet is closed off by the plunger insert. The piston moves to the right.

V935 Four-Way Normally Closed-Normally Open Valves

The plungers of the two valves are at opposite positions in both the energized and de-energized conditions - one normally open while the other is normally closed. When de-energized, fluid flows from the inlet of the valve through the inlet port of the normally open valve, through the sleeve, and out the cylinder port of the valve. At the same time, the normally closed valve inlet orifice is closed, but the orifice in the sleeve is opened, permitting flow from its cylinder port to the common exhaust. Therefore, fluid flows from the inlet of the valve to the cylinder port of the normally open valve and from the cylinder port of the normally closed valve to the exhaust. When energized, the two valves reverse in position.

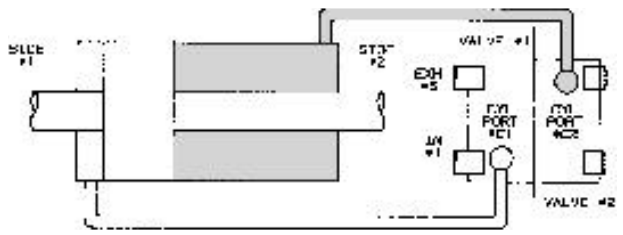

Typical Cylinder Operation with V935 Valves.
Both coils de-energize – The inlet pressure is open to side #2 of the double-acting cylinder through cylinder port #C2 and the plunger insert closes off the exhaust. Side #1 of the cylinder is open to exhaust through cylinder port #C1 and the inlet pressure is closed off. This causes the piston in the cylinder to move to the left.

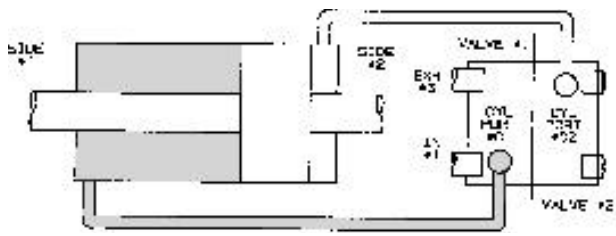

Both coils energized – The inlet pressure is open to side #1 of the cylinder through cylinder port #C1 and the exhaust is closed off. Side #2 of the cylinder is open to exhaust through cylinder port #C2 and the inlet pressure is closed off by the plunger insert. The piston moves to the right.

V955 Four-Way Normally Open-Normally Open Valves

Both plungers are in the same position when the coils are de-energized. In this condition, fluid flows through the common inlet of the body, up through the sleeves of both valves, and out the cylinder ports of the valves. Both orifices in the sleeve stops are closed to the exhaust ports by the plunger. In the energized position, both valve plungers operate together to close the inlet ports, stopping flow into the valve. At the same time, the orifices in the sleeves are opened, permitting flow from the cylinder ports to the common exhaust port in the body.

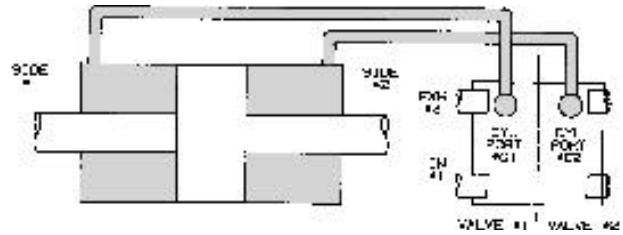

Typical Cylinder Operation with V955 Valves.
Both coils de-energized – The inlet pressure is open to both sides of the double-acting cylinder through cylinder ports #C1 and #C2. Both sides of the cylinder are closed to exhaust by the plunger insert.

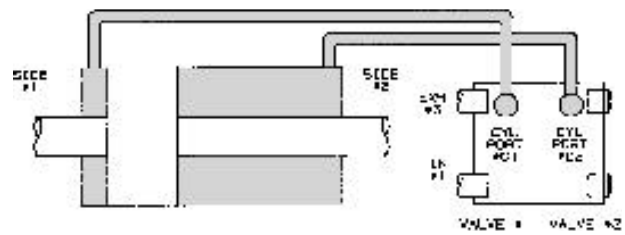

Coil of valve #1 energized; coil of valve #2 de-energized – The inlet pressure is closed to side #1 of the double-acting cylinder and open to exhaust through cylinder port #C1. Side #2 of the cylinder is open to the inlet pressure, through cylinder port #C2 - the exhaust is closed off by the plunger insert. The piston moves to the left.

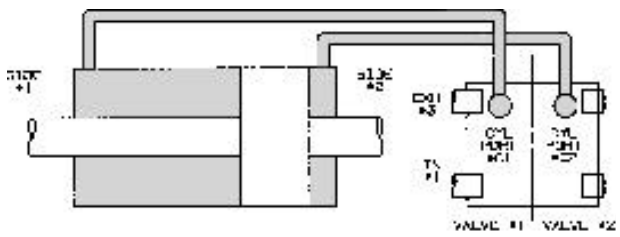

Coil of valve #1 de-energized; coil of valve #2 energized – The inlet pressure is open to side #1 of the cylinder through cylinder port #C1 and the exhaust is closed off by the plunger insert. Side #2 of the cylinder is open to exhaust through the cylinder port #C2 and the plunger insert closes off the inlet pressure. The piston moves to the right.

V933 PILOT OPERATED ZINC VALVES – NORMALLY CLOSED-NORMALLY CLOSED NEUTRAL POSITION, NBR SEALS

NPT Pipe Size	Orifice Diameters: Valve #1 (NC) Inlet Port	Valve #1 (NC) Cv Factor	Valve #1 (NC) Exhaust Port	Valve #1 (NC) Cv Factor	Valve #2 (NC) Inlet Port	Valve #2 (NC) Cv Factor	Valve #2 (NC) Exhaust Port	Valve #2 (NC) Cv Factor	*Maximum Operating Pressure Diff. (PSI)	Class B Molded Leaded Coil	Const. Ref.
1/4"	3/64	0.052	1/16	0.095	3/64	0.052	1/16	0.095	150 (200)	V933LB2150	59
	1/16	0.095	3/32	0.14	1/16	0.095	3/32	0.14	100 (125)	V933LB2100	59
	3/32	0.16	3/32	0.14	3/32	0.16	3/32	0.14	75 (90)	V933LB2075	59
	1/8	0.21	3/32	0.14	1/8	0.21	3/32	0.14	50 (65)	V933LB2050	59

V935 PILOT OPERATED ZINC VALVES – NORMALLY CLOSED-NORMALLY OPEN NON-NEUTRAL POSITION, NBR SEALS

NPT Pipe Size	Orifice Diameters: Valve #1 (NC) Inlet Port	Valve #1 (NC) Cv Factor	Valve #1 (NC) Exhaust Port	Valve #1 (NC) Cv Factor	Valve #2 (NO) Inlet Port	Valve #2 (NO) Cv Factor	Valve #2 (NO) Exhaust Port	Valve #2 (NO) Cv Factor	*Maximum Operating Pressure Diff. (PSI)	Class B Molded Leaded Coil	Const. Ref.
1/4"	3/64	0.052	1/16	0.095	3/64	0.052	1/16	0.095	150 (200)	V935LB2150	59
	1/16	0.095	3/32	0.14	1/16	0.08	1/8	0.18	100 (125)	V935LB2100	59
	3/32	0.16	3/32	0.14	3/32	0.14	1/8	0.21	75 (90)	V935LB2075	59
	1/8	0.21	3/32	0.14	3/32	0.14	1/8	0.21	50 (65)	V935LB2050	59

V955 PILOT OPERATED ZINC VALVES – NORMALLY OPEN-NORMALLY OPEN NEUTRAL POSITION, NBR SEALS

NPT Pipe Size	Orifice Diameters: Valve #1 (NO) Inlet Port	Valve #1 (NO) Cv Factor	Valve #1 (NO) Exhaust Port	Valve #1 (NO) Cv Factor	Valve #2 (NO) Inlet Port	Valve #2 (NO) Cv Factor	Valve #2 (NO) Exhaust Port	Valve #2 (NO) Cv Factor	*Maximum Operating Pressure Diff. (PSI)	Class B Molded Leaded Coil	Const. Ref.
1/4"	3/64	0.052	1/16	0.095	3/64	0.052	1/16	0.095	150 (225)	V955LB2150	59
	1/16	0.08	1/8	0.18	1/16	0.08	1/8	0.18	100 (150)	V955LB2100	59
	3/32	0.14	1/8	0.18	3/32	0.14	1/8	0.21	75 (100)	V955LB2075	59

V933 PILOT OPERATED ZINC VALVES – NORMALLY CLOSED-NORMALLY CLOSED NEUTRAL POSITION – WITH ADJUSTABLE FLOW OPTION, NBR SEALS

NPT Pipe Size	Orifice Diameters: Valve #1 (NC) Inlet Port	Valve #1 (NC) Cv Factor	Valve #1 (NC) Exhaust Port	Valve #1 (NC) Cv Factor	Valve #2 (NC) Inlet Port	Valve #2 (NC) Cv Factor	Valve #2 (NC) Exhaust Port	Valve #2 (NC) Cv Factor	*Maximum Operating Pressure Diff. (PSI)	Class B Molded Leaded Coil: Adjustable Flow At Both Exhausts	Adjustable Flow At Both Inlets	Full Adjustable Flow At Both Exhausts & Inlets	Const. Ref.
1/4"	3/64	0.052	1/16	0.095	3/64	0.052	1/16	0.095	150 (200)	V933LEH2150	V933LEP2150	V933LEF2150	59
	1/16	0.105	3/32	0.13	1/16	0.105	3/32	0.13	100 (125)	V933LEH2100	V933LEP2100	V933LEF2100	59
	3/32	0.13	3/32	0.13	3/32	0.13	3/32	0.13	75 (90)	V933LEH2075	V933LEP2075	V933LEF2075	59
	1/8	0.16	3/32	0.13	1/8	0.16	3/32	0.13	50 (65)	V933LEH2050	V933LEP2050	V933LEF2050	59

* *Figures in parentheses indicate higher than standard pressure ratings available with slight modifications.*

V935 PILOT OPERATED ZINC VALVES – NORMALLY CLOSED – NORMALLY OPEN NON-NEUTRAL POSITION – WITH ADJUSTABLE FLOW OPTION, NBR SEALS

NPT Pipe Size	Orifice Diameters: Valve #1 (NC) Inlet Port	Valve #1 (NC) Cv Factor	Valve #1 (NC) Exhaust Port	Valve #1 (NC) Cv Factor	Valve #2 (NO) Inlet Port	Valve #2 (NO) Cv Factor	Valve #2 (NO) Exhaust Port	Valve #2 (NO) Cv Factor	*Maximum Operating Pressure Diff. (PSI)	Class B Molded Leaded Coil: Adjustable Flow At Both Exhausts	Adjustable Flow At Both Inlets	Full Adjustable Flow At Both Exhausts & Inlets	Const. Ref.
1/4"	3/64	0.052	1/16	0.095	3/64	0.052	1/16	0.095	150 (200)	V935LEH2150	V935LEP2150	V935LEF2150	59
	1/16	0.105	3/32	0.13	1/16	0.08	1/8	0.16	100 (125)	V935LEH2100	V935LEP2100	V935LEF2100	59
	3/32	0.13	3/32	0.13	3/32	0.13	1/8	0.16	75 (90)	V935LEH2075	V935LEP2075	V935LEP2075	59
	1/8	0.16	3/32	0.13	3/32	0.13	1/8	0.16	50 (65)	V935LEH2050	V935LEP2050	V935LEF2050	59

V955 PILOT OPERATED ZINC VALVES – NORMALLY OPEN - NORMALLY OPEN NEUTRAL POSITION – WITH ADJUSTABLE FLOW OPTION, NBR SEALS

NPT Pipe Size	Orifice Diameters: Valve #1 (NO) Inlet Port	Valve #1 (NO) Cv Factor	Valve #1 (NO) Exhaust Port	Valve #1 (NO) Cv Factor	Valve #2 (NO) Inlet Port	Valve #2 (NO) Cv Factor	Valve #2 (NO) Exhaust Port	Valve #2 (NO) Cv Factor	*Maximum Operating Pressure Diff. (PSI)	Class B Molded Leaded Coil: Adjustable Flow At Both Exhausts	Adjustable Flow At Both Inlets	Full Adjustable Flow At Both Exhausts & Inlets	Const. Ref.
1/4"	3/64	0.052	1/16	0.095	3/64	0.052	1/16	0.095	150 (225)	V955LEH2150	V955LEP2150	V955LEF2150	59
	1/16	0.08	1/8	0.16	1/16	0.08	1/8	0.16	100 (150)	V955LEH2100	V955LEP2100	V955LEF2100	59
	3/32	0.13	1/8	0.16	3/32	0.13	1/8	0.16	75 (100)	V955LEH2075	V955LEP2075	V955LEF2075	59

* *Figures in parentheses indicate higher than standard pressure ratings available with slight modifications.*

Valve Options & Accessories

Optional Features	Option Code
Class H molded leaded coil	LH

For ordering instructions see Ordering Information section on page 10.

DRAWINGS

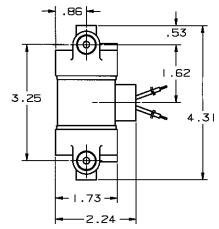

Note: Enclosure and adjustable flow designators (B, EH, EPOR EF) have been omitted for brevity.

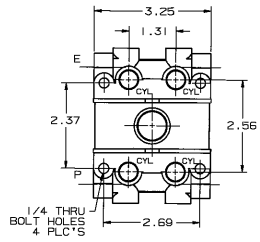

#59

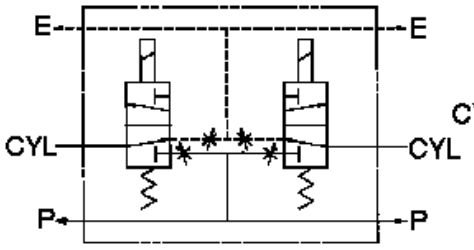

Four-Way Normally Closed-Normally Closed

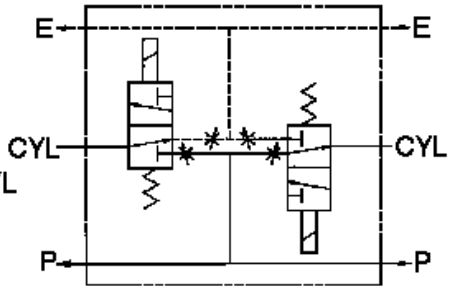

Four-Way Normally Closed-Normally Open

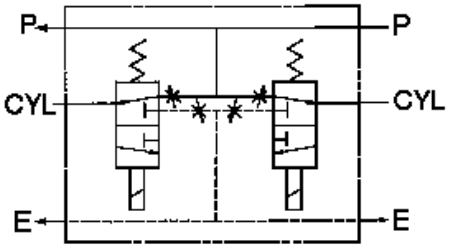

Four-Way Normally Open-Normally Open

Specialty Valve Contents

SKINNER 7000 Series Hydraulic Two-Way Direct Acting Valves

SPECIFICATIONS

Product Description

Skinner Hydraulic valves are specifically designed for use in hydraulic systems. The valves are spool type valves that can withstand a static pressure up to 1000 PSI. All internal parts are compatible with most hydraulic fluids.

Mechanical Characteristics

Standard Materials of Construction

- Body–Stainless Steel (430F)
- Seals–Metal (spool type)
- Sleeve Tube–Stainless Steel (304)
- Armature–Stainless Steel (430FR)
- Stop–Stainless Steel (430FR)
- Springs–Stainless Steel (18-8)
- Shading Rings–Copper
- Spool–Stainless Steel (17-4PH)
- Flange Seal–NBR

Compatible Fluids

- Hydraulic Fluids.

Electrical Characteristics

Voltages

- DC–12, 24
- AC–24/60, 110/50-120/60, 208/60, 220/50-240/60, 440/50-480/60 (other AC/DC voltages available upon request)

Power Consumption

- 10 watts
- Fluxtron Electronic Coils and Magnelatch (refer to page 137 for current draw charts)

Agency Approvals

- UL and CSA approvals are available on valves with applicable coil/enclosure combinations. For additional information see page 136.

Valve Construction Alternatives

Mounting

- Manifold, flange and cage types available. Consult factory for details.

Miscellaneous

Maximum Ambient Temperature

- 10 watt AC/DC–150°F
- Fluxtron/Magnelatch–122°F

Leakage

- Internal–At 70°F with MIL-H-5606A oil, maximum allowable leakage is 80cc/min. at 1000 PSI.
- External–None

DIRECT ACTING STAINLESS STEEL VALVES–NORMALLY CLOSED

Pipe Size NPT	Orifice Size (inch)	Cv Factor	Static Pressure (PSI) Min.	Maximum AC Rating 10 watt	Maximum DC Rating 10 watt	MAX. Fluid Temp. (F)	Pressure Vessel Number	UL/CSA* Approval	Const. Ref.
1/8"	7/64	0.21	0	1000	1000	185	71211SN1MM00	GP	60

DIRECT ACTING STAINLESS STEEL VALVES–NORMALLY OPEN

Pipe Size NPT	Orifice Size (inch)	Cv Factor	Static Pressure (PSI) Min.	Maximum AC Rating 10 watt	Maximum DC Rating 10 watt	MAX. Fluid Temp. (F)	Pressure Vessel Number	UL/CSA* Approval	Const. Ref.
1/8"	7/64	0.21	0	1000	1000	185	71221SN1MM00	GP	60

* *UL/CSA Approval Information: SS=safety Shutoff GP=General Purpose Blank=Not Approved*
See page 136 for additional agency approval information.

DRAWINGS

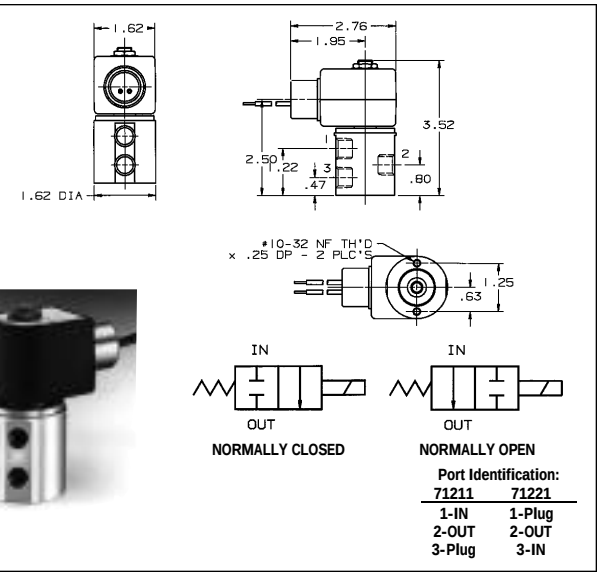

SKINNER 7000 Series Dry Operator Two-Way Direct Acting Valves

SPECIFICATIONS

Product Description

The 7000 Series Dry Operator valve line is specially designed for non-contaminating and corrosive applications. The valves assure absolute purity and inertness to corrosion when used with a broad range of fluids.

Dry Operator valves feature two basic construction innovations. The operator is physically isolated from the fluid by a diaphragm so only the seal and valve body come in contact with the fluid. And, valve bodies of Noryl and Teflon provide the purity from contamination and resistance to corrosion many industries demand.

Mechanical Characteristics

Standard Materials of Construction

- Body–Noryl, Teflon, Stainless Steel (303)
- Seals–NBR, PTFE as listed. EPDM and FKM also available.
- Sleeve Tube–Stainless Steel (304)
- Plunger–Stainless Steel (430FR)
- Stop–Stainless Steel (430FR)
- Springs–Stainless Steel (18-8)
- Shading Ring–Copper

Compatible Fluids

- Fluids compatible with diaphragm and body materials. See Fluid Compatibility Chart.

Electrical Characteristics

Voltages

- DC–12, 24
- AC–24/60, 110/50-120/60, 208/60, 220/50-240/60, 440/50-480/60 (other AC/DC voltages available upon request)

Power Consumption

- 10, 22 watts
- Fluxtron Electronic Coils and Magnelatch (refer to page 137 for current draw charts)

Agency Approvals

- UL and CSA approvals are available on valves with applicable coil/enclosure combinations. For additional information see page 136.

Miscellaneous

Maximum Ambient Temperature

- 10 watt AC/DC–150°F
- 22 watt AC/DC–77°F
- Fluxtron/Magnelatch–122°F

Important Application Information Back Pressure Data

Dry operator valves require consideration of back pressure since the back pressure acts on a large area of the diaphragm. Excessive back pressure can keep the valves open on de-energization. The back pressure a standard valve can operate against depends on the orifice size, pressure differential and whether the media is a gas or liquid.

The following two charts provide a method to verify that the valve selected can meet the application back pressure requirements.

For applications involving back pressure that cannot be handled by catalog valves, please consult Skinner Valve.

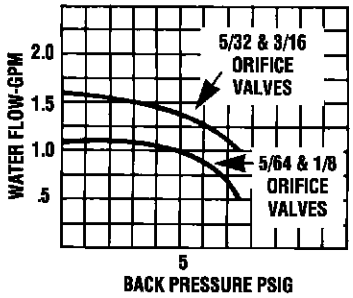

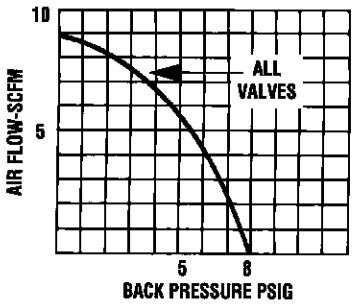

Helpful Application Suggestions:

To keep the back pressure to a minimum, the downstream line should be as short as possible and be of the largest practical size. All restricting or flow controlling elements should be installed upstream.

Use of Back Pressure Charts:

To use the charts, it is necessary to know the flow and back pressure.

1) First calculate the flow in GPM for liquids or SCFM for gases from the flow charts in the Technical Information Section.

2) The back pressure is the downstream pressure in the system. A catalog valve may be used if the intersection of flow and back pressure is below the curve for its orifice size.

7000 Series Dry Operator Two-Way Direct Acting Valves

DIRECT ACTING NORYL VALVES–NORMALLY CLOSED, 1/8” NPT MALE, NBR SEALS

Pipe Size NPT	Orifice Size (inch)	Cv Factor	Operating Pressure Differential (PSI) Min.	Maximum AC Ratings 10 watt	Maximum AC Ratings 22 watt	Maximum DC Ratings 10 watt	Maximum DC Ratings 22 watt	MAX. Fluid Temp. (F)	Pressure Vessel Number	UL/CSA* Approval	Const. Ref.
1/8 Male	5/64	0.16	0	70		70		140	71214LE1KN00	GP	61
	1/8	0.23	0	50		50		140	71214LE1MN00	GP	61
	5/32	0.35	0	35		35		140	71214LE1QN00	GP	61
	3/16	0.47	0	20		20		140	71214LE1SN00	GP	61

DIRECT ACTING NORYL VALVES–NORMALLY CLOSED, 3/8” BARB, NBR SEALS

Pipe Size NPT	Orifice Size (inch)	Cv Factor	Operating Pressure Differential (PSI) Min.	Maximum AC Ratings 10 watt	Maximum AC Ratings 22 watt	Maximum DC Ratings 10 watt	Maximum DC Ratings 22 watt	MAX. Fluid Temp. (F)	Pressure Vessel Number	UL/CSA* Approval	Const. Ref.
3/8” BARB	5/64	0.16	0	70		70		140	71214LT3KN00	GP	62
	1/8	0.23	0	50		50		140	71214LT3MN00	GP	62
	5/32	0.35	0	35		35		140	71214LT3QN00	GP	62
	3/16	0.47	0	20		20		140	71214LT3SN00	GP	62

DIRECT ACTING TEFLON VALVES–NORMALLY CLOSED, 1/4” NPT, PTFE SEALS

Pipe Size NPT	Orifice Size (inch)	Cv Factor	Operating Pressure Differential (PSI) Min.	Maximum AC Ratings 10 watt	Maximum AC Ratings 22 watt	Maximum DC Ratings 10 watt	Maximum DC Ratings 22 watt	MAX. Fluid Temp. (F)	Pressure Vessel Number	UL/CSA* Approval	Const. Ref.
1/4” NPT	5/64	0.16	0	70		70		140	71214TN2KT00	GP	63
	1/8	0.23	0	50		50		140	71214TN2MT00	GP	63
	5/32	0.35	0	35		35		140	71214TN2QT00	GP	63
	3/16	0.47	0	20		20		140	71214TN2ST00	GP	63

DIRECT ACTING STAINLESS STEEL VALVES–NORMALLY CLOSED, 1/4” NPT, NBR SEALS

Pipe Size NPT	Orifice Size (inch)	Cv Factor	Operating Pressure Differential (PSI) Min.	Maximum AC Ratings 10 watt	Maximum AC Ratings 22 watt	Maximum DC Ratings 10 watt	Maximum DC Ratings 22 watt	MAX. Fluid Temp. (F)	Pressure Vessel Number	UL/CSA* Approval	Const. Ref.
1/4” NPT	5/64	0.16	0	70		70		140	71214VN2KN00	GP	4
	1/8	0.23	0	50		50		140	71214VN2MN00	GP	4
	5/32	0.35	0	35		35		140	71214VN2QN00	GP	4
	3/16	0.47	0	20		20		140	71214VN2SN00	GP	4

DIRECT ACTING STAINLESS STEEL VALVES–NORMALLY CLOSED, 1/4” NPT, PTFE SEALS

Pipe Size NPT	Orifice Size (inch)	Cv Factor	Operating Pressure Differential (PSI) Min.	Maximum AC Ratings 10 watt	Maximum AC Ratings 22 watt	Maximum DC Ratings 10 watt	Maximum DC Ratings 22 watt	MAX. Fluid Temp. (F)	Pressure Vessel Number	UL/CSA* Approval	Const. Ref.
1/4” NPT	5/64	0.16	0	70		70		140	71214VN2KT00	GP	4
	1/8	0.23	0	50		50		140	71214VN3MT00	GP	4
	5/32	0.35	0	35		35		140	71214VN2QT00	GP	4
	3/16	0.47	0	20		20		140	71214VN2ST00	GP	4

** UL/CSA Approval Information: SS=Safety Shutoff GP=General Purpose Blank=Not Approved*

See page 136 for additional agency approval information.

7000 Series Dry Operator Two-Way Direct Acting Valves

DRAWINGS

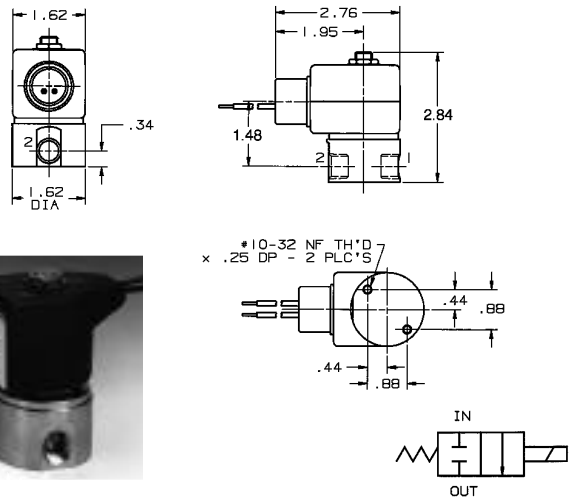

#4

Port Identification: 1-OUT/ 2-IN

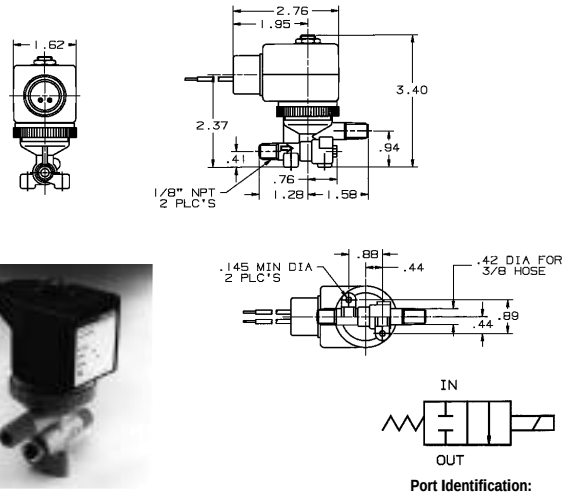

#61

Port Identification:
Flow area on body indicates flow direction – ports are not marked.

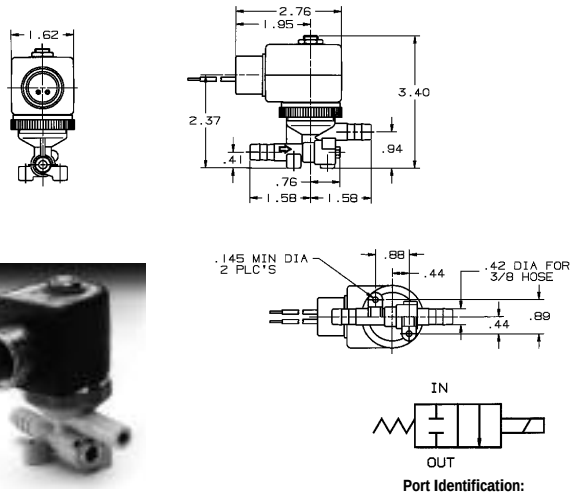

#62

Port Identification:
Flow area on body indicates flow direction – ports are not marked.

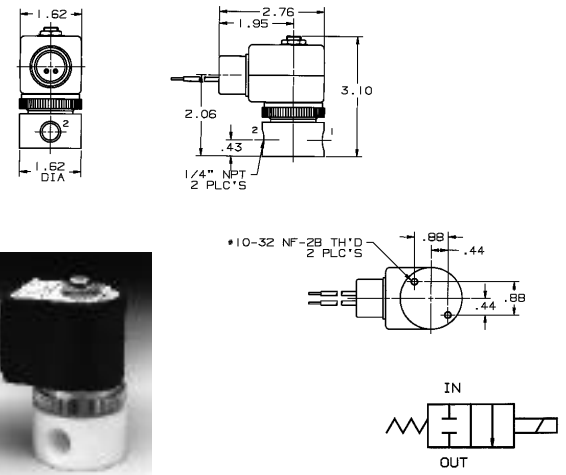

#63

Port Identification:
1-OUT/ 2-IN

SKINNER Hydraulic 7000 Series

Three-Way Direct Acting Valves

SPECIFICATIONS

Product Description

Specifically designed for use in hydraulic systems, these valves are spool type valves that can withstand a static pressure up to 1000 PSI. All internal parts are compatible with most hydraulic fluids. A range of custom mounting types are available including manifold, flange and cage designs.

Mechanical Characteristics

Standard Materials of Construction

- Body–Stainless Steel (430F)
- Seals–Metal
- Flange Seal–NBR
- Sleeve Tube–Stainless Steel (304)
- Plunger–Stainless Steel (430FR)
- Stop–Stainless Steel (430FR)
- Springs–Stainless Steel (18-8)
- Shading Ring–Copper
- Spool–Stainless Steel (17-4PH)
- Flange Seal–NBR

Compatible Fluids

- Hydraulic Fluids.

Electrical Characteristics

Voltages

- DC–12, 24
- AC–24/60, 110/50-120/60, 208/60, 220/50-240/60, 440/50-480/60 (other AC/DC voltages available upon request)

Power Consumption

- 10, 16 watts
- Fluxtron Electronic Coils and Magnelatch

Agency Approvals

- UI and CSA approvals are available on valves with applicable coil/enclosure combinations. For additional information see page 136.

Miscellaneous

Leakage

- Internal– At 70°F with MIL-H-5606A oil, maximum allowable leakage is 80cc/min. at 1000PSI.
- External–None.

Maximum Ambient Temperature

- 10 watt AC/DC–150°F
- 22 watt AC/DC–77°F
- Fluxtron/ Magnelatch–122°F

Valve Construction Alternatives

Mounting

- Manifold, flange and cage types available. Consult factory for details.

HYDRAULIC VALVES

Pipe Size NPT	Orifice Body NC (inch)	Orifice Body NO (inch)	Cv Factor NC	Static Pressure (PSI) Cv Factor NO	Min.	Maximum AC Ratings 10 watt	Maximum AC Ratings 22 watt	Maximum DC Ratings 10 watt	Maximum DC Ratings 22 watt	Max. Fluid Temp. (F)	Pressure Vessel Catalog Number	UL/CSA* Approval	Const. Ref.
Normally Closed													
1/8"	7/64	7/64	0.21	0.21	0	1000		1000		185	71311SN1MM00	GP	91
Normally Open													
1/8"	7/64	7/64	0.21	0.21	0	1000		1000		185	71321SN1MM00	GP	91
Multipurpose													
1/8"	7/64	7/64	0.21	0.21	0	1000		1000		185	71331SN1MM00	GP	91
Diverting													
1/8"	7/64	7/64	0.21	0.21	0	1000		1000		185	71381SN1MM00	GP	91

** UL/CSA Approval Information: GP=General Purpose Blank=Not Approved*

See page 136 for additional agency approval information.

MAXIMUM PERMISSIBLE FLOW AND PRESSURE DIFFERENTIALS

Pressure Vessel Catalog Number	Flow Path	Maximum Flow (GPM)	Maximum Pressure Differential (PSI)
71311SN1MM00	1 to 2	5.70	700
	2 to 3	5.70	700
71321SN1MM00	3 to 2	6.50	900
	2 to 1	3.50	450
71331SN1MM00	Consult specific functions for flow and pressure limits		
71381SN1MM00	2 to 3	2.50	150
	2 to 1	2.50	150

DRAWINGS

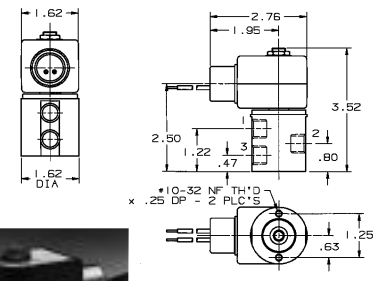

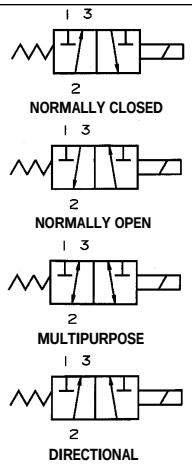

Port Identification:

71311	71321	71331	71831
1-Pressure	Exhaust	NC	NC
2-Cylinder	Cylinder	Cylinder	IN
3-Exhaust	Pressure	NO	NO

#91

SKINNER Dual-Flow Series Dispensing Two-Way Diaphragm Valves

SPECIFICATIONS

Product Description

Skinner Dual-Flow solenoid valves are designed to control two flow rates on command. The valves are actually two valves in one compact assembly using a single dual-wound coil. The valves accurately dispense a predetermined amount of liquid by providing a high-flow (full-flow) for delivery of the bulk amount, and then switch to the low-flow mode to dispense the final amount required.

Skinner Dual-Flow valves can be ordered with a variety of optional features to best adapt to specific installation requirements.

Mechanical Characteristics

Flow Sequence

- Off-Low-High-Low-Off

Standard Materials of Construction

- Body–Brass
- Seals–Fluorocarbon (FKM)
- Diaphragm–NBR
- Sleeve–Stainless Steel
- Plunger–Stainless Steel
- Springs–Stainless Steel
- Shading Ring–Copper

Maximum Ambient and Fluid Temperature

- 104°F (40°C)

Electrical Characteristics

Voltages

- DC–24 VDC
- AC–24/60, 120/60, 208/60, 240/60, 42/50, 110/50, 220/50, 240/50 (other AC/DC voltages available upon request)

Power Consumption

- High–15 watts
- Low Flow–8 watts

Agency Approvals

- UL listed and CSA Certified (CENELEC available upon request)

Coil

- Class F taped with 3 gasoline vapor resistant lead wires, 48” long (other constructions and lead wire lengths available upon request)

Miscellaneous

Applications

- Fuel Dispensing
- Process Industries (Blending/Mixing/Batching)
  - Petrochemical
  - Refining
  - Food
  - Pharmaceutical

XLG2 TYPE DUAL FLOW BRASS VALVES–NORMALLY CLOSED

Pipe Size Body NPT	Orifice Diameter		Cv Factor		Operating Pressure Differential (PSI)			1/2” NPT Conduit Explosion Proof	Const. Ref.
	Full Flow	Low Flow	Full Flow	Low Flow	Min.	Maximum AC	Maximum DC		
3/4”	3/4	3/32	5.5	0.17	5	50		XLG2O600	64
3/4”	3/4	3/32	5.5	0.17	5		50	XLG2O760	64
1”	1	1/16	13	0.12	5	50		XLG2O1030	64
1”	1	1/16	13	0.12	5		50	XLG2O1060	64
1 1/2”	1 1/4	1/16	21	0.12	5	50		XLG2O1530	65

DRAWINGS

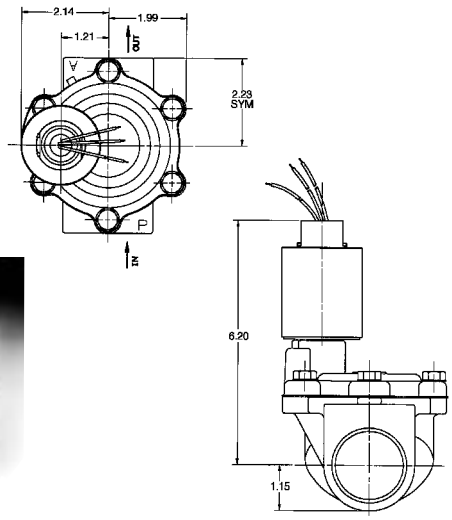

#65

Valve	Dimension A	B	C	D	E	F	G
XLG20600	1.83	0.81	1.15	5.25	0.66	1.30	1.43
XLG20760	1.83	0.81	1.15	5.25	0.66	1.30	1.43
XLG201030	2.04	1.02	1.62	5.86	0.86	1.72	2.13
XLG201060	2.04	1.02	1.62	5.86	0.86	1.72	2.13

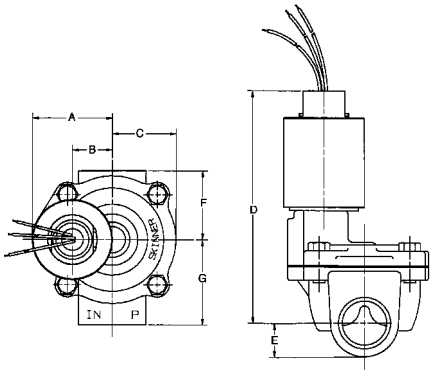

#64

SKINNER BP Proportional Series Two-Way Valves

SPECIFICATIONS

Mechanical Characteristics

Standard Materials of Construction

- Body–Stainless Steel
- Seals–NBR, Fluorocarbon (FKM)
- Sleeve Tube–Stainless Steel
- Plunger–Stainless Steel
- Stop–Stainless Steel
- Springs–Stainless Steel
- Orifice–Stainless Steel

Compatible Media

- All gases compatible with valve materials. For more detail consult the Fluid Compatibility Chart in our Technical Reference Manual #CTRM12-90.

Electrical Characteristics

Voltages

- 12-24 VDC compatibility

Power Consumption

- 7 watts maximum

Miscellaneous

Temperature

- Ambient–14°F to 122°F (-10°C to 50°C)
- Media–0°F to 180°F (-18°C to 82°C)

Hysteresis

- 10% of full flow (in open loop applications)

Repeatability of a Valve

- 5% when operating within Linear Control Range

Response Time

For complete cycle, Off-Full Open-Off

- 40 msec at zero pressure
- 100 msec at max. pressure

Coil Type

- Class A

Enclosure

- General Purpose, NEMA 1

Operating Principle

The Skinner BP valve is an analog proportional device. The current supplied to the coil of the BP valve is digitally modulated by the electronic package. The mechanism which opens and closes the valve's flow orifice moves in a linear manner in response to the varying coil current. The amount that the orifice is opened is a function of the user's input signal to the valve.

Traditional proportional control solenoid valves are operated by pulse width modulation which entails proportionally controlling flow by modulating the "open time" in a fully closed-fully open-fully closed cycle. The BP does not operate in this manner.

Benefits of analog control technology used in the BP valve include longer valve life, linear flow control, no pressure or flow spikes, faster response time, simplified control systems and less power consumption.

Control Systems

Proportional solenoid valves, whether analog controlled or pulse width modulated, can be used in open or closed-loop control systems. In open-loop control, the input signal to the valve is not coupled to feedback from the system. In closed-loop control, sensors provide system information (pressure, flow, temperature) to the controller, which then adjusts the input signal to the valve until the desired condition is reached.

BP Valves in Open-Loop Systems

Non-critical applications can be controlled in an open-loop fashion. Under steady state conditions an input signal to the valve will open the orifice and produce a certain amount of flow. However, when system conditions change, such as pressure, the output of the valve will also change.

BP Valves in Closed-Loop Systems

For applications requiring more precise control, closed-loop control systems are recommended. In such systems, measurements of process parameters (provided by pressure, temperature and/or flow sensors) are compared to a desired set-point by a controller. If a discrepancy exists, the controller will change the input signal to the BP valve until the desired setpoint is achieved.

BP Proportional Series Two-Way Valves

BP VALVES – NORMALLY CLOSED

Pipe Size (NPT)	Orifice Size (inches)	Cv	Maximum Operating Pressure (PSI)	Flow Ranges: At Maximum Operating Pressure (SCCM)	Flow Ranges: 10 PSI Example (SCCM)	Catalog Number – Control Input Signal: 0-2V	0-5V	0-10V	4-20mA	Const. Ref.
1/8”	1/64	Consult Factory								
1/8”	1/32	0.02	200	0-50,000	0-8,000	BP2EV0001	BP2EV0012	BP2EV0013	BP2EV0029	66
1/8”	3/64	0.045	100	0-65,000	0-17,000	BP2EV0002	BP2EV0010	BP2EV0011	BP2EV0024	66
1/8”	1/16	0.08	60	0-75,000	0-30,000	BP2EV0003	BP2EV0005	BP2EV0009	BP2EV0020	66
1/8”	5/64	0.12	40	0-80,000	0-45,000	BP2EV0004	BP2EV0006	BP2EV0008	BP2EV0014	66
1/8”	3/32	Consult Factory								

Note: Custom configurations and calibrations are available to suit your exact flow requirements. For information consult the factory.

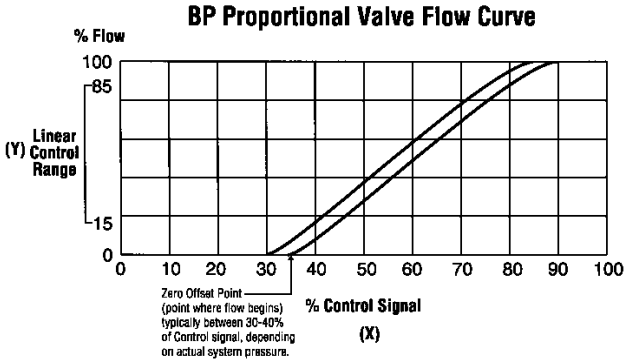

DRAWINGS

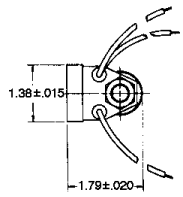

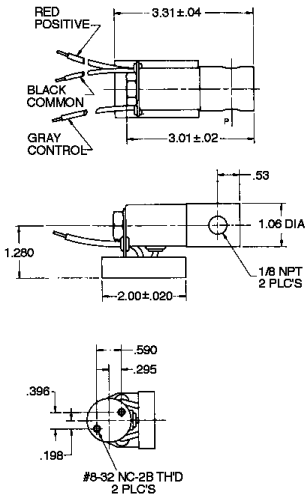

#66

SKINNER Intrinsically Safe Series

SKINNER INTRINSICALLY SAFE SOLENOID VALVES

For hazardous and low-power power applications

Today, intrinsically safe systems and products are recommended, or in some cases compulsory, where the highest level of protection from explosion is required. They are also employed in applications that require low power.

A hazardous (classified) location is where fire or explosion hazards exist due to the presence of flammable gases or vapors, flammable liquids, combustible dust, or easily ignitable fibers or flyings.

Skinner Valve has long served industry with innovative and safety related products. Our Intrinsically Safe solenoid valves have approvals for use in the United States and Canada in hazardous classifications for Classes I, II, III, Division 1 and 2, and in the United Kingdom for Division 0, 1 and 2. In Europe our valves are approved according to CENELEC standards. All countries in Western Europe now follow common (CENELEC) standards. All CENELEC member countries should recognize apparatus which have been tested and certified by any CENELEC member country.

What is an intrinsically safe system?

An intrinsically safe system is most often an assembly of approved intrinsically safe apparatus, associated apparatus, and interconnecting cables. Approved I.S. apparatus are devices that are incapable, during normal operation or under fault conditions, of causing explosive atmospheres to ignite by spark or thermal effect. Explosive atmospheres are mixtures of flammable or combustible material in air in their most easily ignitable concentrations.

Solenoid valves are examples of I.S. apparatus and must be approved for use in specific hazardous (classified) locations. Associated apparatus, such as safety barriers, are devices which are not necessarily intrinsically safe themselves, but which are not necessarily intrinsically safe themselves, but which affect the energy in the I.S. circuit and are relied upon to maintain intrinsic safety.

How does intrinsic safety apply to solenoid valves?

When related to solenoid valves, intrinsic safety means that the coil's current draw and resulting temperature is held to such a low level (by an approved safety barrier) that the valve no longer has the capability of igniting a mixture of flammable or combustible material, either during normal operation or under fault conditions.

When designed into an intrinsically safe system, Skinner's Intrinsically Safe solenoid valves provide a number of significant performance advantages.

Low Power Consumption

Skinner's Intrinsically Safe valves are rated at 24 VDC nominal, and are calibrated to operate at a minimum current draw as low as 29 milliamps (0.029 amps).

Low Temperature Rise

Skinner Intrinsically Safe valve enclosures are designed to maintain a maximum outside surface temperature less than 85°C. This meets the T6 classification assigned by Underwriters Laboratories Inc.

Variety of Mounting Possibilities

Skinner Intrinsically Safe valves can be mounted in any position and still operate normally.

Media Compatibility

Intrinsically Safe Skinner valves in 2-way constructions are suitable for use with oil, air, water, and inert gases. Our 3- and 4-way valves are suitable for use with air and inert gases only.

Wide Selection of Options

A selection of coil enclosures including splice box, cable, 1/2" NPT conduit, and DIN coils are available for use with Skinner Intrinsically Safe valves. Additionally, some models are offered in manifold mounted configurations.

Watertight Construction

All Intrinsically Safe Skinner coil enclosures are equivalent to NEMA 4 Watertight construction.

SKINNER Intrinsically Safe Series

Two-Way Direct Acting and Pilot Operated Valves

SPECIFICATIONS

Mechanical Characteristics

Standard Materials of Construction

- Body–Brass
- Seals–FKM, NBR. Other diaphragm materials available upon request.

Compatible Media

- Air, water and light oil.

Electrical Characteristics

Based on coil selected. See catalog pages 106-110 for detailed electrical information.

Miscellaneous

For applications below freezing temperatures, valves must be degreased. Consult Skinner prior to ordering.

INTRINSICALLY SAFE SOLENOID VALVES–TWO-POSITION

Global Part Number	Part Number	Valve Type	Port Size NPTF	Orifice Size	Valve Materials Seal/Body	Operating Pressure Differential (PSI)	Flow Rate Cv/SCFM*	Minimum Ambient Temp. °F/°C	Maximum Fluid Temp. °F/°C	Valve Weight lbs.	Const. Ref.
7121KBN2CV90	U121K0490	2W,NC	1/4”	3/64”	FKM/Brass	0-150	0.04/1.2	+14/-10	165/75	0.44	72
7121KBN2EV90	U121K0890	2W,NC	1/4”	1.2mm	FKM/Brass	0-100	0.06/1.75	+14/-10	165/75	0.44	72
7121KBN2GV90	U121K0690	2W,NC	1/4”	1.5mm	FKM/Brass	0-75	0.11/2.8	+14/-10	165/75	0.44	72
7321HBN4UV90	U321H1590	2W,NC	1/2”	5/8”	FKM, NBR/Brass#	5-150	4.4/110	+14/-10	165/75	1.38	73
7321GBN53V90	U321G3690	2W,NC	3/4”	3/4”	FKM, NBR/Brass#	5-150	9.8/330	+14/-10	165/75	2.86	74
7321GBN64V90	U321G3790	2W,NC	1”	1”	FKM, NBR/Brass#	5-150	12.6/490	+14/-10	165/75	2.42	74
7321GBN76V90	U321G3890	2W,NC	1 1/4’	1 1/4’	FKM, NBR/Brass#	5-150	19.6/630	+14/-10	165/75	3.75	74
7321GBN88V90	U321G3990	2W,NC	1 1/2”	1 9/16”	FKM, NBR/Brass#	5-150	29.5/1100	+14/-10	165/75	5.30	74
7321GBN99V90	U321G4090	2W,NC	2”	1 9/16”	FKM, NBR/Brass#	5-150	39.2/1400	+14/-10	165/75	6.17	74

** Measured at 90 PSI with a 15 PSI differential.*
 # Other diaphragm material available upon request.

DRAWINGS

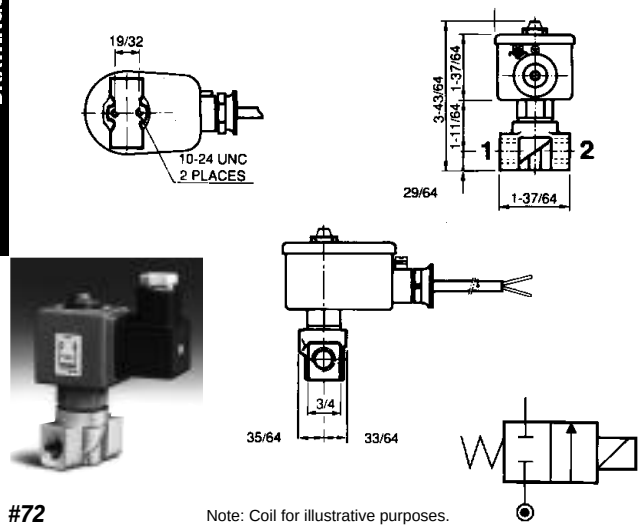

#72

Note: Coil for illustrative purposes.

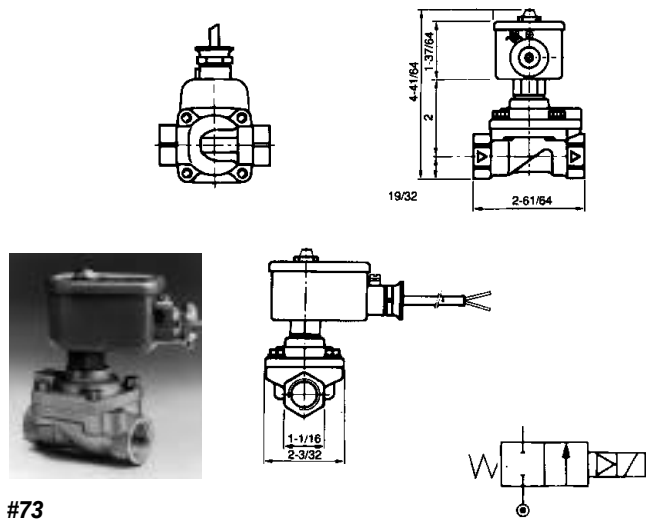

#73

Intrinsically Safe Series

Two-Way Direct Acting and Pilot Operated Valves

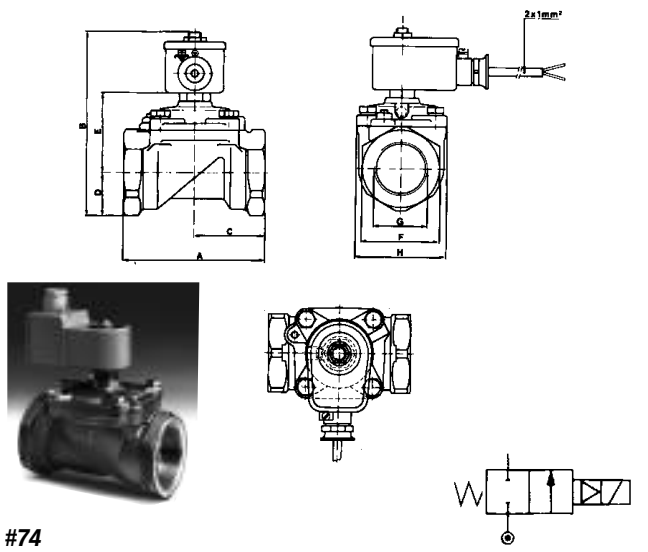

#74

Valve	A		B		C		D		E		F		G	H	
	IN	MM	IN	MM	IN	MM	IN	MM	IN	MM	IN	MM	NPT	IN	MM
U321G3690	3-15/16”	100	5-5/16”	135	2”	50	7/8”	23	2-23/64”	60	1-5/8”	41	3/4”	2-3/4”	70
U321G3790	3-15/16”	100	5-5/16”	135	2”	50	7/8”	23	2-23/64”	60	1-5/8”	41	1”	2-3/4”	70
U321G3890	4-11/32”	110	6-7/32”	158	2-5/32”	55	1-9/32”	33	2-7/8”	73	2-3/8”	60	1-1/4”	2-3/4”	70
U321G3990	5-17/32”	140	6-7/32”	158	3”	75	1-9/32”	33	2-7/8”	73	2-3/8”	60	1-1/2”	3-1/16”	99
U321G4090	5-29/32”	150	6-25/32”	172.5	3-5/32”	80	1-21/32”	41.5	3-7/64”	79	3”	75	2”	3-1/16”	99

SKINNER Intrinsically Safe Series

Three-Way Direct Acting and Pilot Operated Valves

SPECIFICATIONS

Mechanical Characteristics

Standard Materials of Construction

- Body–Brass, Stainless Steel or Aluminum
- Seals–FKM, NBR. Other diaphragm materials available upon request.

Compatible Fluids

- Air and inert gases.

Electrical Characteristics

- Based on coil selected. Valve U133X5196 functions with coil part numbers 490860, 482660, and 48333.,01 only. See catalog pages 106-110 for detailed electrical information.

Miscellaneous

Sleeve Exhaust Adaptor

- U21-004 must be ordered separately.

For applications below 32°F, valves must be degreased. Consult Skinner prior to ordering.

INTRINSICALLY SAFE SOLENOID VALVES–TWO-POSITION

Global Part Number	Part Number	Valve Type	Port Size NPTF	Orifice Size	Valve Materials Seal/Body	Operating Pressure Differential (PSI)	Flow Rate Cv/SCFM*	Minimum Ambient Temp. °F/°C	Maximum Fluid Temp. °F/°C	Valve Weight lbs.	Const. Ref.
7131KBN2CV90	U131K0490	3W, NC	1/4”	3/64”	FKM/Brass	0-150	0.04/1.25	+14/-10	165/75	0.44	75
7131KBN2EV90	U131K0890	3W, NC	1/4”	1.2mm	FKM/Brass	0-100	0.06/1.75	+14/-10	165/75	0.44	75
7131KBN2GV90	U131K0690	3W, NC	1/4”	1.5mm	FKM/Brass	0-75	0.11/2.8	+14/-10	165/75	0.40	75
7131VVN2CV90	U131V5490	3W, NC	1/4”	3/64”	FKM/S.Steel(303)	0-150	0.04/1.25	+14/-10	165/75	0.50	76
7131VVN2EV90	U131V5890	3W, NC	1/4”	1.2mm	FKM/S.Steel(303)	0-100	0.06/1.75	+14/-10	165/75	0.53	76
7131VVN2GV90	U131V5690	3W, NC	1/4”	1.5mm	FKM/S.Steel(303)	0-75	0.11/2.8	+14/-10	165/75	0.53	76
-	U133X5196	3W,U	1/4”	5mm	NBR/S.Steel (316)	0-150	.63/24.5	+14/-10	165/75	1.81	77
7131FBF4CV90	U131F4490	3W, NC	Subbase	3/64”	FKM/Brass	0-150	0.04/1.25	+14/-10	165/75	0.30	78
7131FBNFGV90	U131F4890	3W, NC	Subbase	1.2mm	FKM/Brass	0-100	0.06/1.75	+14/-10	165/75	0.33	78
7131FBNFEV90	U131F4690	3W, NC	Subbase	1.5mm	FKM/Brass	0-75	0.11/2.8	+14/-10	165/75	0.33	78
7331BAN2KV90	U331B7490	3W, NC	1/4”	9/32”	FKM, NBR/Aluminum#	15-150	0.70/26	+14/-10	165/75	0.88	79
7331LAV4TV90	U331L2190	3W, NC	1/2”	5/8”	FKM, NBR/Aluminum#	7-150	4/175	+14/-10	165/75	2.90	80

** Measured at 90 PSI with a 15 PSI differential.*
 # Other diaphragm material available upon request.

Note: U133X5196 valves function with coils 490860, 482660 or 483330.01 only.

DRAWINGS

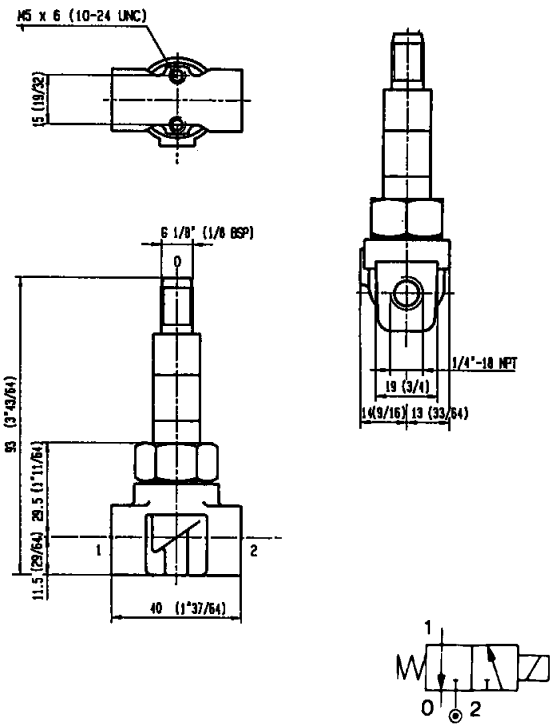

#75

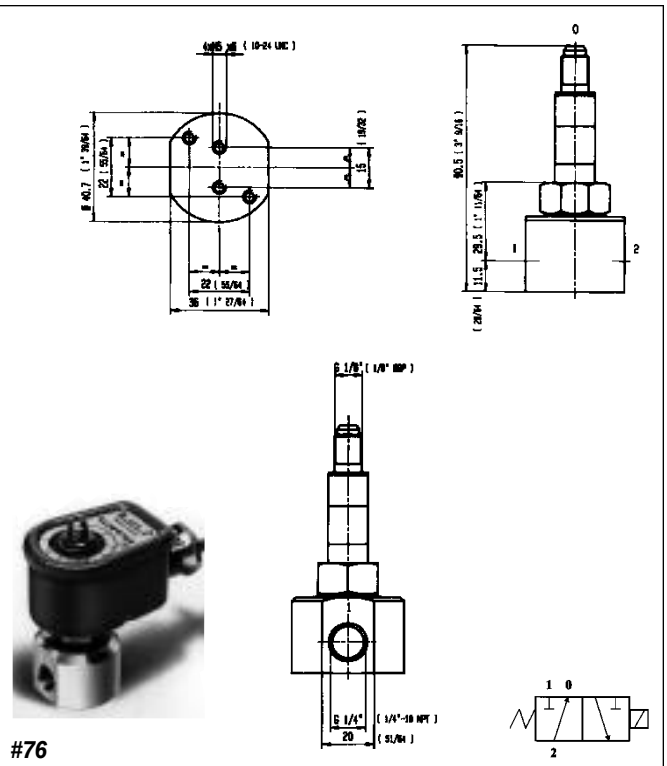

#76

Intrinsically Safe Series

Three-Way Direct Acting and Pilot Operated Valves

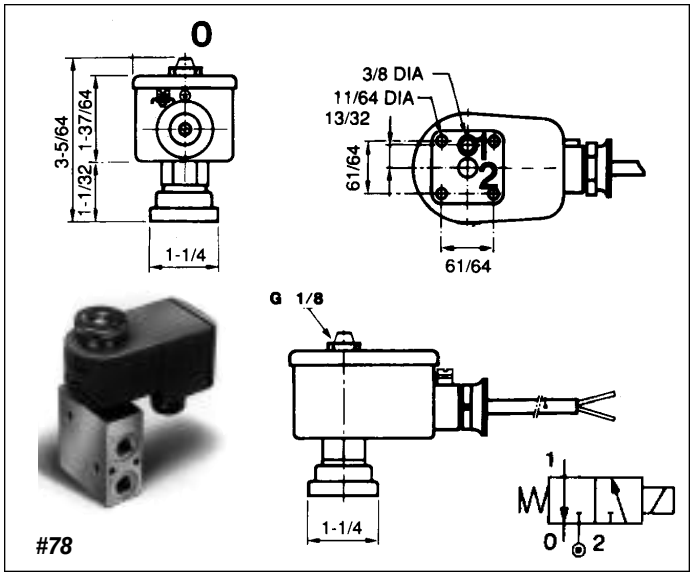

#78

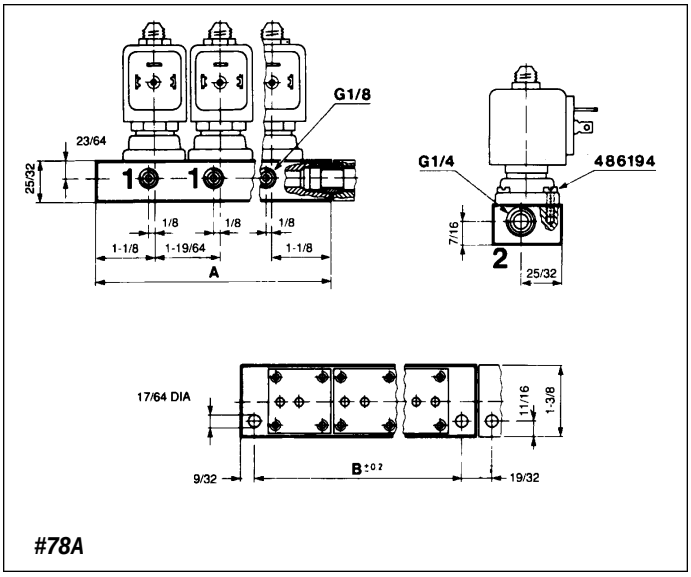

#78A

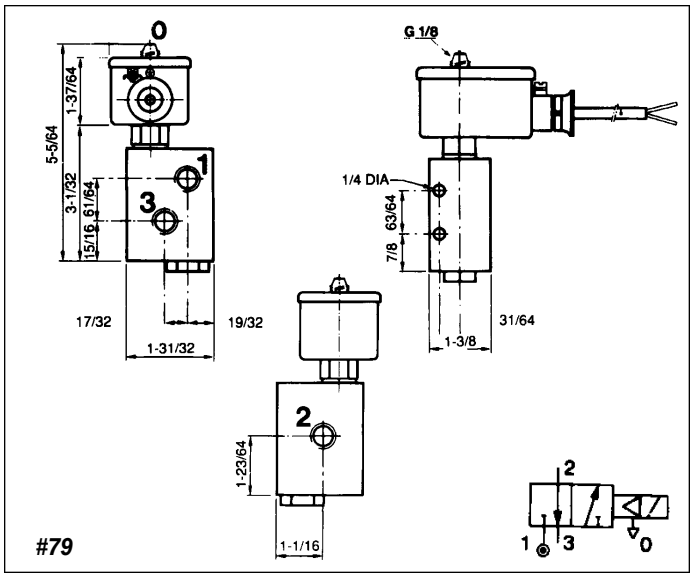

#79

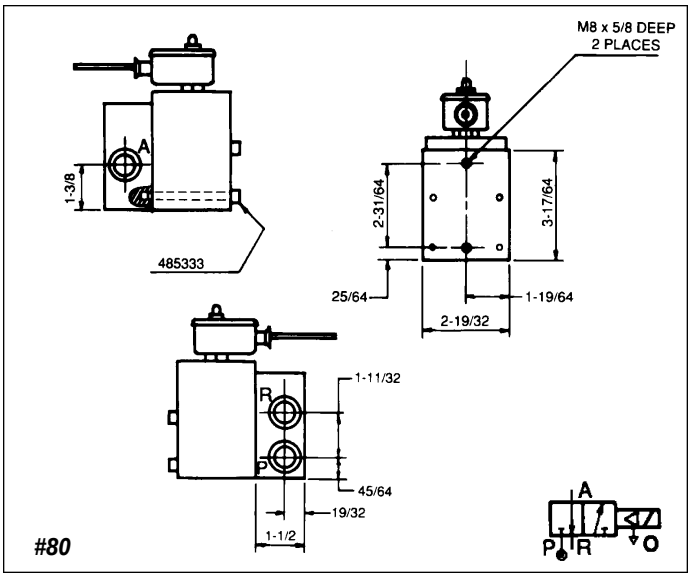

#80

Manifold Components

Description	Part No.
Manifold Subbases for 2 valves	486162
Manifold Subbases for 3 valves	486163
Manifold Subbases for 5 valves	486164
Connection Nipples	485725
0-Ring	485730
Screw-M4X12	486194

Note: Only coils 490880, 483580 and 483960 can be used with manifolds.
Manifold subbases are anodized Al-Mg-Si alloy.

Quantity of Valves	Required Components			
	Subbases	Connection Nipples	O-Rings	Screws
2	1-486162	NR	NR	8-486194
3	1-486163	NR	NR	12-486194
4	2-486162	1-485725	2-485730	16-486194
5	1-486164	NR	NR	20-486194
6	2-486163	1-485725	2-485730	24-486194
7	1-486162 1-486164	1-485725	2-485730	28-486194
8	1-486163 1-486164	1-485725	2-485730	32-486194
9	1-486162 1-486164	2-485725	4-485730	36-486194
10	2-486164	1-485725	2-485730	40-486194

SKINNER Intrinsically Safe Series

Special Purpose Three-Way Quick Exhaust and Manual Reset Valves

SPECIFICATIONS

Mechanical Characteristics

Standard Materials of Construction

- Body–Brass, Stainless Steel
- Seals–NBR, FKM

Compatible Fluids

- Air and inert gases.

Electrical Characteristics

- Based on coil selected. the Quick Exhaust valve functions with coil numbers 490860, 482660 and 483330.01 only. See catalog pages 106-110 for detailed electrical information.

Miscellaneous

Safe body working pressure is 1500 PSI (Quick Exhaust) and 725 PSI (Manual Reset).

INTRINSICALLY SAFE SOLENOID VALVES–THREE-WAY, TWO-POSITION, UNIVERSAL, MANUAL RESET

Global Part Number	Part Number	Valve Type	Port Size NPTF	Orifice Size	Valve Materials Seal/Body	Operating Pressure Differential (PSI)	Flow Rate Cv/SCFM*	Minimum Ambient Temp. °F/°C	Maximum Fluid Temp. °F/°C	Valve Weight lbs.	Const. Ref.
-	U033X5156	3W,U	1/4”	5mm	FKM/S.Steel	0-150	.63/24.5	-13/-25	165/75	1.81	81

** Measured at 90 PSI with a 15 PSI differential. Safe body working pressure 725 PSI.*

Note: This valve must be used with unique I.S. coils not illustrated in this catalog. For specific application requirements consult Skinner.

INTRINSICALLY SAFE SOLENOID VALVES–THREE-WAY, TWO-POSITION, QUICK EXHAUST

Global Part Number	Part Number	Valve Type	Port Size NPTF	Orifice Size		Valve Materials Seal/Body	Operating Pressure Differential	Flow Rate				Minimum Ambient Temp. °F/°C	Maximum Fluid Temp. °F/°C	Valve Weight lbs.	Const. Ref.
								Cv		SCFM*					
				P	E			P	E	P	E				
-	U131E0391	3W, NC	1/4”	3/32	1/4	FKM, NBR/ Brass	1.5-105	0.29	1.1	8	39	+14/-10	165/75	1.32	82

** Measured at 90 PSI with a 15 PSI differential. Safe body working pressure 1500 PSI.*

Note: This valve functions with coils 490860, 482660 or 483330.01 only.

DRAWINGS

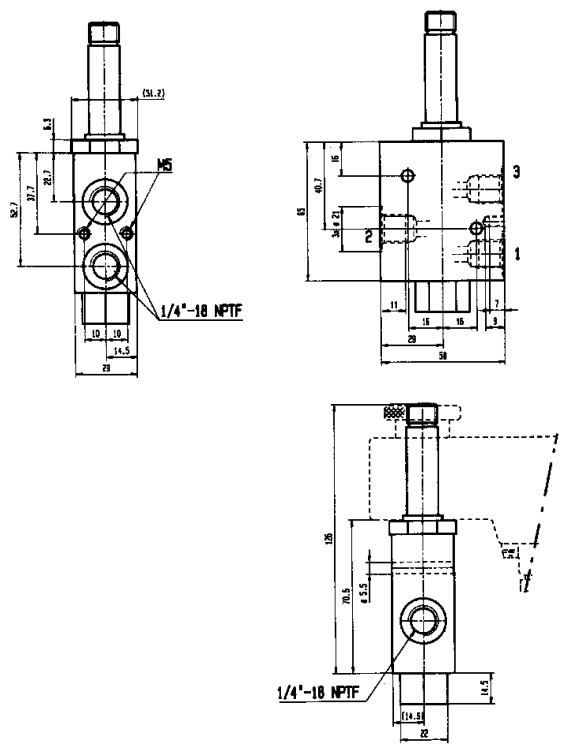

#81

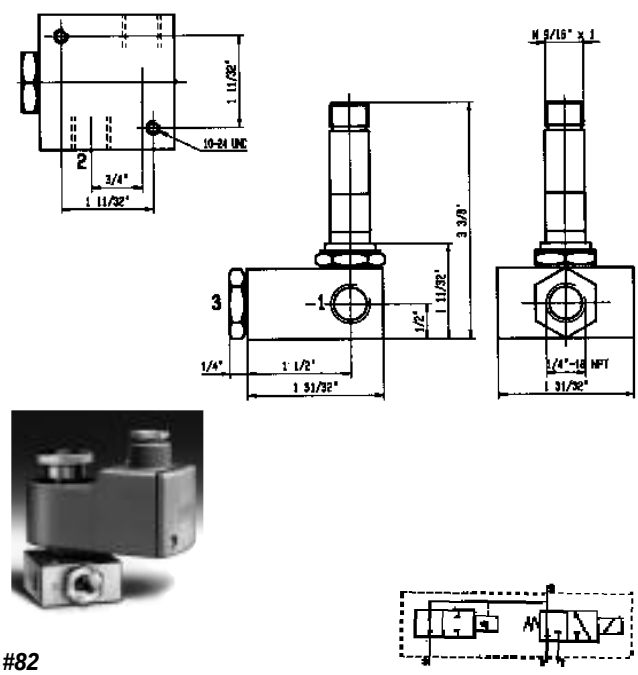

#82

SKINNER Intrinsically Safe Series

Four-Way Two-Position Valves

SPECIFICATIONS

Mechanical Characteristics

Standard Materials of Construction

- Body–Aluminum
- Seals–FKM, NBR. Other diaphragm materials available upon request.

Compatible Fluids

- Air and inert gases.

Electrical Characteristics

- Based on coil selected. See catalog pages 106-110 for detailed electrical information.

INTRINSICALLY SAFE SOLENOID VALVES – TWO-POSITION

Global Part Number	Part Number	Valve Type	Port Size NPTF	Orifice Size	Valve Materials Seal/Body	Operating Pressure Differential (PSI)	Flow Rate Cv/SCFM*	Minimum Ambient Temp. °F/°C	Maximum Fluid Temp. °F/°C	Valve Weight lbs.	Const. Ref.
7341BAN2JV90	U341B3490	4-way 4-ported	1/4”	1/4”	FKM, NBR/ Aluminum	15-150	0.7/24	+14/-10	165/75	1.28	83
7341LAV4TV90	U341L2190	4-way 5-ported	1/2”	9/16”	FKM, NBR/ Aluminum	7-150	4/175	+14/-10	165/75	3.75	84
7341LAV62V90	U341L4190	4-way 5 ported	1” BSP	1”	FKM, NBR/ Aluminum	15-150	10.5/390	+14/-10	165/75	9.03	85
7347LMN2NV90	U347L1190	4-way 5-ported 2-solenoid	1/4”	5/16”	NBR/ Zamak (Zinc alloy)	15-150	1.4/54	+14/-10	165/75	2.04	86

* *Measured at 90 PSI with a 15 PSI differential. # Other diaphragm material available upon request.*

DRAWINGS

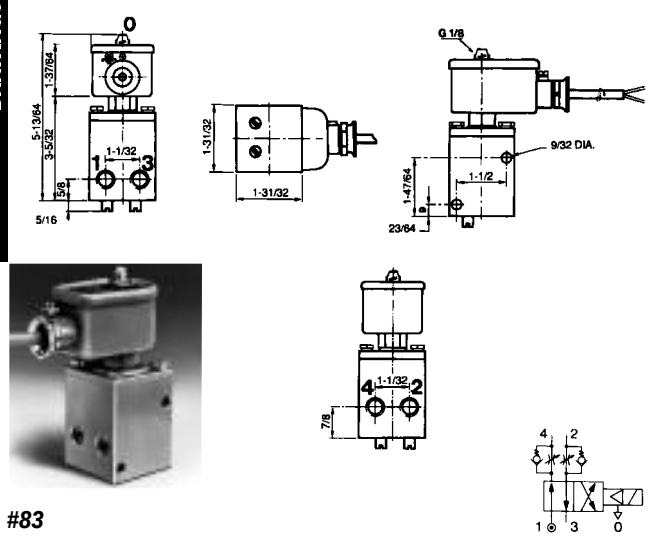

#83

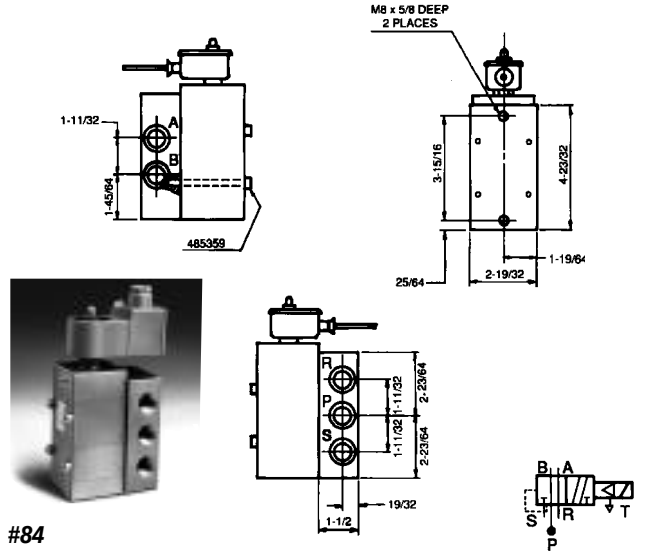

#84

SKINNER Intrinsically Safe Series

Four-Way
Two-Position Valves

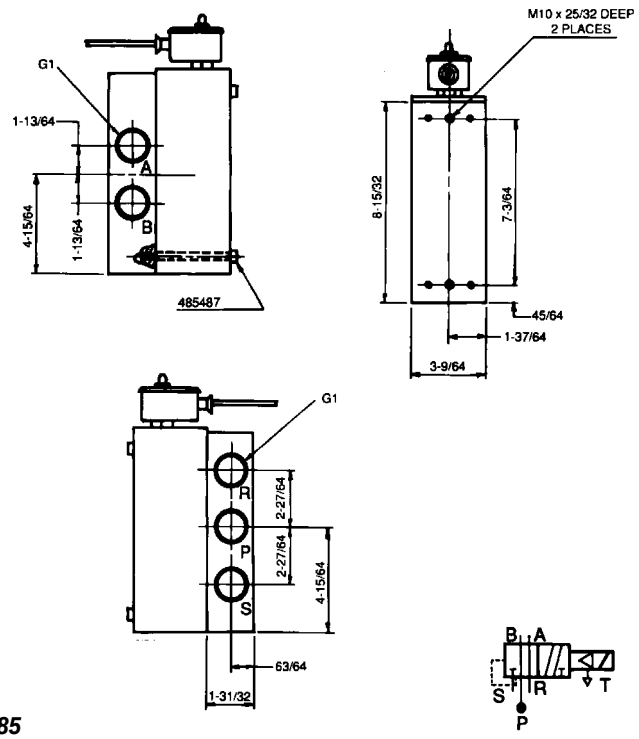

#85

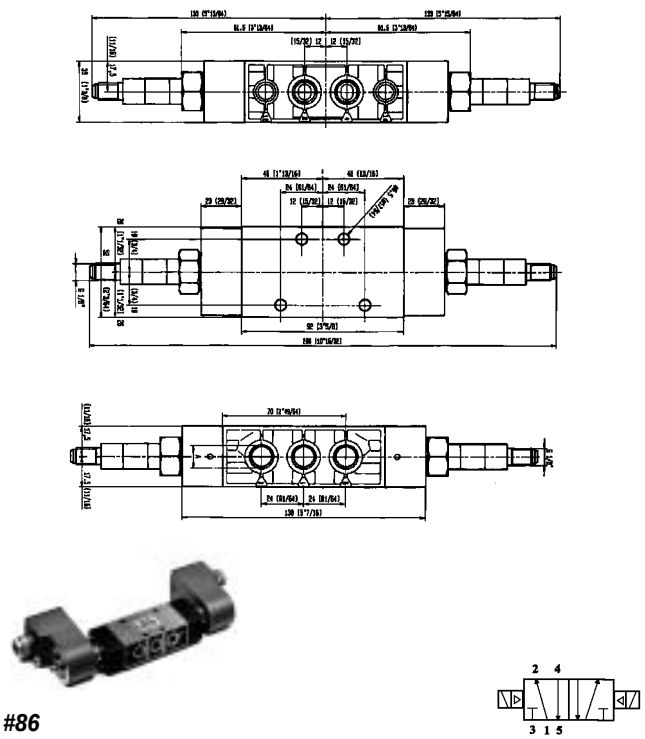

#86

Intrinsically Safe Series

INTRINSICALLY SAFE COIL AND ENCLOSURE INFORMATION

IMPORTANT: The intrinsically safe supply circuit should have enough capacity in all environmental and system conditions to insure delivery of at least the minimum specified operating current of the coil. Be sure to include the internal coil resistance and the bridge rectifier resistance (where applicable) when calculating circuit parameters.

Splice Box Enclosure with Strain Relief Egress Specifications

Protection Class

- IP 65 according to DIN 40050 and IEC 529 standards. Equivalent to NEMA 4 Watertight.

Construction

- Polyamid with fiberglass enclosure and cover.

Electrical Entry and Connections

- Cable entry through a blue cable gland pg 13.5 (20.4mm) (DIN 46320). Screw terminals for leads 3 x 1.5mm^2. Additional ground connection possible with external screw terminal.

Enclosure

- Coil, printed circuit and other parts for I.S. specifications are completely encapsulated within the enclosure using epoxy material.

Dielectric Strength

- Greater than 500 V rms

Bridge Rectifier Resistance

- Less than 50 ohms at 29mA

Coil Internal Resistance

- 295 ohms at 20°C

Voltage

- 24 VDC nominal

Minimum Operating Current

- 29 milliamps

Coil Temperature Rise

- Less than 5°C

Maximum Enclosure Temperature

- <85°C (corresponding to T6 class) according to CENELEC-EN 50014.

Ambient Temperature

- 13°F to + 149°F (-25°C to +65°C)

F.M. Entity Parameters

- V_{max} = 30 volts
- I_{max} = 100 mA
- C_i = O
- L_i = 0 mH

Options

- 1/2" NPT Conduit Hub Adaptor. Order part number U22-002.

Electrical Parts

Reference Number	Approvals	Classification
490885	FM, CSA	Class I, Div. 1, Grps A,B,C,D, Class II, Div. 1, Grps E,F,G, Class III, DIv. 1
488650	PTB*	EEx ib IIC T6
488650.01	CERCHAR/CESI*	EEx ia IIC T6
488650.01	BASEEFA	Ex ia IIC T6
488650.03	SAA (Australia)	Ex ia IIC T6

* *Note: According to CENELEC*

DRAWINGS

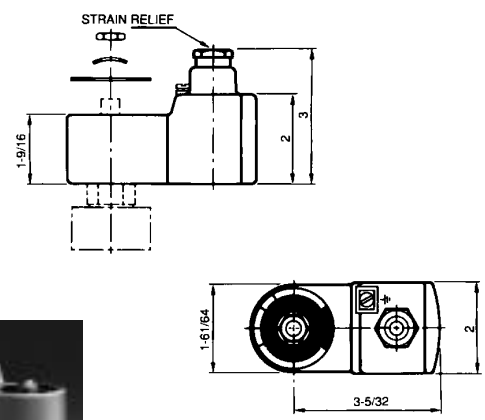

#67

Intrinsically Safe Series

Potted Lead Wire Coil with Strain Relief Egress Specifications

Protection Class

- IP 67 according to DIN 40050 and IEC 529 standards. Equivalent to NEMA 4 Watertight.

Construction

- Epoxy coated metal enclosure and cover.

Electrical Entry and Connections

- Fixed and potted two core (2 x 1mm^2) blue connection cable of 2m length. Other cable lengths on request. Entry cable gland pg 11 (18.6mm) (DIN 46320). Additional ground connection possible with external screw terminal.

Enclosure

- Coil, welded lead connections, printed circuit and other parts for I.S. specifications are completely encapsulated within the enclosure using epoxy material.

Dielectric Strength

- Greater than 500 V rms

Bridge Rectifier Resistance

- Less than 50 ohms at 29mA

Coil Internal Resistance

- 295 ohms at 20°C

Voltage

- 24 VDC nominal

Minimum Operating Current

- 29 milliamps

Coil Temperature Rise

- Less than 5°C

Maximum Enclosure Temperature

- <85°C (corresponding to T6 class) according to CENELEC-EN 50014.

Ambient Temperature

- -40°F to + 149°F (-40°C to +65°C)

F.M. Entity Parameters

- V_{max} = 30 volts
- I_{max} = 100 mA
- C_i = O
- L_i = 0 mH

Options

- 1/2" NPT Conduit Hub Adaptor. Order part number U22-003.

Electrical Parts

Reference Number	Approvals	Classification
490890 (VZ1300)	FM, CSA	Class I, Div. 1, Grps A,B,C,D Class II, Div. 1, Grps E,F,G Class III, DIv. 1
488660	PTB*	EEx ib IIC T6
488660.01	CERCHAR/CESI*	EEx ia IIC T6
488660.01	BASEEFA	Ex ia IIC T6
488660.03	SAA (Australia)	Ex ia IIC T6

* *Note: According to CENELEC*

DRAWINGS

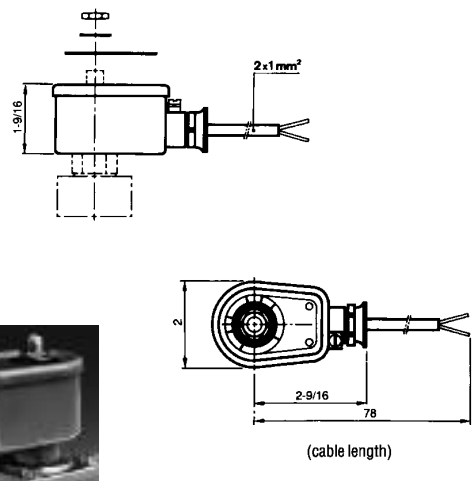

#68

Intrinsically Safe Series

Potted Coil with DIN Connection and DIN Plug Adaptor Specifications

Protection Class

- IP 65 according to DIN 40050 and IEC 529 standards (with DIN plug). Equivalent to NEMA 4 Watertight.

Construction

- Epoxy coated metal enclosure and cover.

Electrical Entry and Connections

- Blue “DIN” standard plug interface and 3-pin AMP plug (DIN 43650 type A) with blue pg 9 gland (15.2mm)

Enclosure

- Coil, printed circuit and other parts for I.S. specifications are completely encapsulated within the enclosure using epoxy material.

Dielectric Strength

- Greater than 500 V rms

Bridge Rectifier Resistance

- Less than 50 ohms at 29mA

Coil Internal Resistance

- 295 ohms at 20°C

Voltage

- 24 VDC nominal

Minimum Operating Current

- 29 milliamps

Coil Temperature Rise

- Less than 5°C

Maximum Enclosure Temperature

- <85°C (corresponding to T6 class) according to CENELEC-EN 50014.

Ambient Temperature

- 13°F to + 149°F (-25°C to +65°C)

F.M. Entity Parameters

- V_{max} = 30 volts
- I_{max} = 100 mA
- C_i = O
- L_i = 0 mH

Options

- 1/2” NPT DIN Plug Adaptor. Order part number U27-001.

Electrical Parts

Reference Number	Approvals	Classification
490895 (VZ2000)	FM, CSA	Class I, Div. 1, Grps A,B,C,D
		Class II, Div. 1, Grps E,F,G
		Class III, DIv. 1
488670	PTB*	EEx ib IIC T6
488670.01	CERCHAR/CESI*	EEx ia IIC T6
488670.01	BASEEFA	Ex ia IIC T6
488670.03	SAA (Australia)	Ex ia IIC T6

* *Note: According to CENELEC*

DRAWINGS

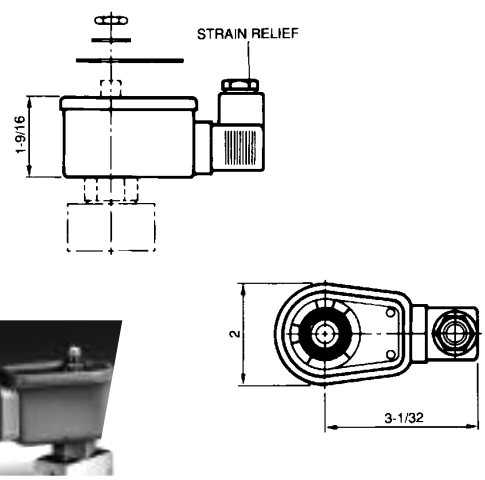

#69

Intrinsically Safe Series

32mm DIN Coil and Plug Adaptor Specifications

Protection Class

- IP 65 according to DIN 40050 and IEC 529 standards (with DIN plug). Equivalent to NEMA 4 Watertight.

Construction

- Fully encapsulated assembly comprising a coil, integral magnetic iron path, three diodes circuit and DIN plug connection. The encapsulation provides an effective compact enclosure offering full protection against dust, oil, water etc.

Electrical Entry and Connections

- The coil is connected with a 3-pin plug pg 9 gland (part number 486586) according to DIN 43650 type A.

Dielectric Strength

- Greater than 500 V rms

Coil Internal Resistance

- 340 ohms at 20°C

Voltage

- 24 VDC nominal

Minimum Operating Current

- 35 milliamps

Coil Temperature Rise

- Less than 5°C

Maximum Enclosure Temperature

- <85°C (corresponding to T6 class) according to CENELEC-EN 50014.

Ambient Temperature

- 13°F to + 131°F (-25°C to +55°C)

F.M. Entity Parameters

- V_{max} = 30 volts
- I_{max} = 100 mA
- C_i = O
- L_i = 0 mH

Options

- 1/2" NPT DIN Plug Adaptor. Order part number U27-001.

Electrical Parts

Reference Number	Approvals	Classification
490880	With Din Plug, FM	Class I, Div. 1, Grps C,D Class II, Div. 1, Grps E,F,G Class III, Div. 1
483580	Without DIN Plug, PTB*	EEx ib IIC T6
483960	With DIN plug, PTB*	EEx ia IIC T6

* *Note: According to CENELEC*

DRAWINGS

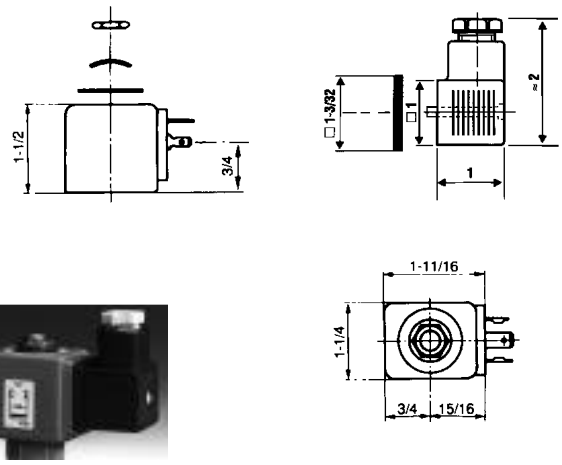

#70

Intrinsically Safe Series

Splice Box Enclosure with Booster Circuit and Strain Relief Egress Specifications

Protection Class

- IP 65 according to DIN 40050 and IEC 529 standards. Equivalent to NEMA 4 Watertight.

Construction

- Polyamid with fiberglass enclosure and cover.

Electrical Entry and Connections

- Screw terminals within terminal box. Cable connection through M20x1.5 cable gland. Additional ground connection possible with external ground terminal.

Enclosure

- Coil, printed circuit and other parts for I.S. specifications are completely encapsulated within the enclosure using epoxy material.

Booster Circuits

- The electronic booster circuit consists of capacitor, diodes, thyristor and Zener diode.

Voltage

- Nominal: 24 VDC nominal
- Maximum: 28 VDC
- Minimum at Attraction: 21.6 VDC*

* *Circuit design must ensure that at least 21.6 VDC is available at the solenoid for proper operation.*

Minimum Holding Current

- 60 mA

Coil Temperature Rise

- Less than 5°C

Maximum Enclosure Temperature

- <85°C (corresponding to T6 class) according to CENELEC-EN 50014.

Ambient Temperature

- 13°F to + 140°F (-25°C to +60°C)

Required Time Delay for Renewed Valve Actuation after Booster Discharge

- Approximately 1 second at nominal voltage

Duty Cycle

- 100% solenoid duty

Options

- 1/2" NPT Conduit Hub Adaptor. Order part number U22-001.

Electrical Parts

Reference Number	Approvals	Classification
490860	FM CSA	Class I, Div. 1, Grps C,D Class II, Div. 1, Grps E,F,G Class III, Div. 1
482660	PTB*	EEx ib IIB T6
483330.01	PTB*	EEx ia IIC T6

* *Note: According to CENELEC*

Acceptable Barriers Include:

MTL	3022
MTL	779
STAHL	9001/01-280/110/10
STAHL	9001/01-280/100/10
STAHL	9001/01-280/165/10
STAHL	9001/03-280/000/00
STAHL	9002/13-280/100/04
STAHL	9002/13-280/110/00

DRAWINGS

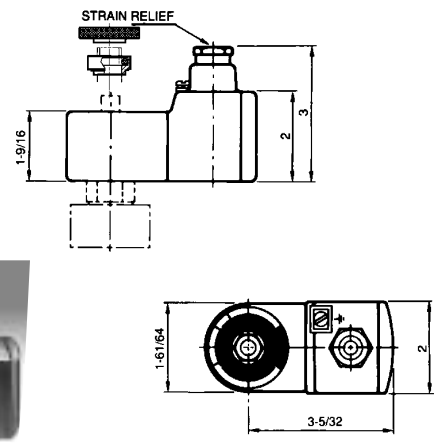

#71

SKINNER Intrinsically Safe Series

Four-Way Two-Position Valves

Hazardous (Classified) Locations

(In accordance with Article 500, National Electrical Code-1984)

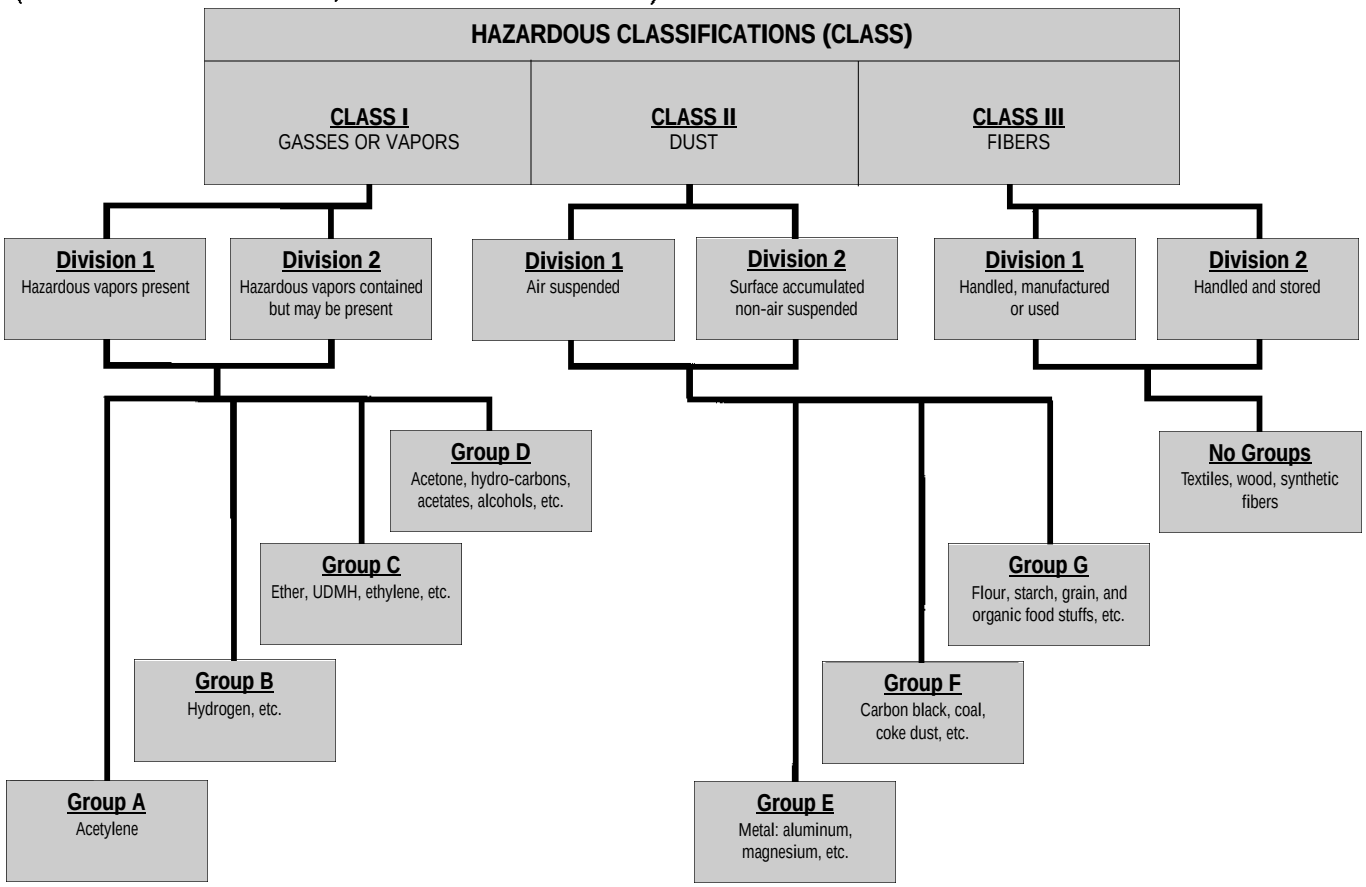

Hazardous Atmosphere Classifications

Typical Gasses in Atmosphere Class I	UK and CENELEC (BS5501: Part 1 EN 50 014)	US National Electrical Code Group
Ethane, propane, butan, pentane, hexane, heptane, octaine, nonane, decane, acetic acid, acetone, methanol, toluene, ethylacetate	IIA	Group D
Ethylene, Coke, oven gas, dimethyl ether, diehylether, ethylene oxide	IIB	C
Hydrogen	IIC	B
Carbon Disulphide		No Classification
Acetylene		A
Ethyl Nitrate		No Classification

Typical Dusts in Atmosphere Class I	UK and CENELEC (BS5501: Part 1 EN 50 014)	US National Electrical Code Group
Metal	No Classification	E
Carbon/Coal		F
Grain		G

Surface Temperature/Agency Code Cross Reference

Maximum Surface Temperature	US Standard (U.L.)		CENELEC
450°C	T1		T1
300°C	T2	T2a - 280°C T2b - 260°C T2c - 230°C T2d - 215°C	T2
200°C	T3	T3a - 180°C T3b - 165°C T3c - 160°C	T3
135°C	T4	T4a - 120°C	T4
100°C	T5		T5
85°C	T6		T6

Hazardous Area Classifications

Description	US	CENELEC
An explosive atmosphere is continuously present	Division I	Zone 0
An explosive atmosphere is intermittently present during normal operations	Division I	Zone 1
An explosive atmosphere is present during abnormal conditions	Division II	Zone 2

NOTE: These charts are provided for reference only. Consult the U.S. National Electrical Code or rating agencies such as Factory Mutual or Underwriter's Laboratories for specific details.

SKINNER A-10 Series

High Pressure Two- and Three-Way Direct Acting Hydraulic Valves

SPECIFICATIONS

Mechanical Characteristics

Standard Materials of Construction

- Body–Stainless Steel (430F)
- Seals–Metal
- Flange Seal–NBR
- Sleeve–Stainless Steel (304)
- Plunger–Stainless Steel (430FR)
- Stop–Stainless Steel (430FR)
- Springs-Stainless Steel (18-8)
- Shading Ring–Copper (AC only)
- Spool–Stainless Steel (17-4PH)

Compatible Fluids

- Hydraulic Fluids. For other media consult Skinner Valve.

Product Description

Skinner 3-way A-10 Series valves are designed for use in high-pressure systems applications up to 3000 PSI. In addition to being available in pipe mounting configurations, A-10 valves are available in several custom mounting configurations including manifold, flange, and cage or cartridge mounted products.

Electrical Characteristics

Voltages

- DC–12, 24, 120
- AC–24/60, 120/60, 240/60 (other voltages available upon request)

Power Consumption

- 14 watts DC
- 16 watts AC

Miscellaneous

Operating Speed

- Up to 300 cycles per minute.

Response Time

- AC–Approximately 4-8 milliseconds to open.
- DC–Approximately 15-30 milliseconds to open, 15-25 milliseconds to close.

Leakage

- Internal–Maximum of 295cc/min. at 3000 PSI and 70°F with Mil-H-5606A oil.
- External–None.

Valve Construction Alternatives

Coil Type

- Class B molded leaded

Enclosure Type

- 1/2" NPT conduit enclosure

Flow Limits

- The spool in A10 Series valves will fail to shift when flow exceeds the maximum rated value. Each catalog listing indicates the flow and pressure drop for which these valves will operate without malfunction. The static pressure listed for each valve will not adversely affect valve operation as long as the rated flows and pressure differentials are not exceeded. The maximum flows (GPM) and pressure differentials (PSI) are based on Mil-H-5606A hydraulic oil at 80°F.

Mounting

- Manifold, flange and cage types available. Consult factory for details.

DIRECT ACTING TYPE A12 AND A126 STAINLESS STEEL VALVES–NORMALLY OPEN

NPT Pipe Size	Effective Orifice Diameter	Average Cv Factor	Static Pressure Rating (PSI)		Max. Pressure Differential (PSI)	Maximum Flow (GPM)	Inlet Port	Outlet Port	Class B Molded Coil 1/2" NPT Conduit Enclosure	Const. Ref.
			AC	DC						
1/8"	3/32	0.15	3000		3000	8.5	1	2	A12LB13002	134
	3/32	0.15		3000	3000	8.5	1	2	A126LB13001	134

DIRECT ACTING TYPE A11 AND A116 STAINLESS STEEL VALVES–DIRECTIONAL CONTROL

NPT Pipe Size	Effective Orifice Diameter	Average Cv Factor	Static Pressure Rating (PSI)		Max. Pressure Differential (PSI)	Maximum Flow (GPM)	Inlet Port	Outlet Port	Class B Molded Coil 1/2" NPT Conduit Enclosure	Const. Ref.
			AC	DC						
1/8"	3/32	0.15	3000		3000	9	3	2	A11LB13002	134
	3/32	0.15		3000	3000	9	3	2	A116LB13001	134

A-10 Series High Pressure Three-Way Direct Acting Hydraulic Valves

DIRECT ACTING TYPE A13, A136 STAINLESS STEEL VALVES – NORMALLY CLOSED

NPT Pipe Size	Effective Orifice Diameter	Average Cv Factor	Static Pressure Rating (PSI) AC	Static Pressure Rating (PSI) DC	Max. Pressure Differential (PSI)	Maximum Flow (GPM)	Inlet Port	Outlet Port	Class B Molded Coil 1/2" NPT Conduit Enclosure	Const. Ref.
1/8"	3/32	0.15	3000		1000	5.7	1	2	A13LB13002	87
	3/32	0.15	3000		2000	7	2	3	A13LB13002	87
	3/32	0.15		3000	1000	5.7	1	2	A136LB13001	87
	3/32	0.15		3000	2000	7	2	3	A136LB13001	87

DIRECT ACTING TYPE A15 AND A156 STAINLESS STEEL VALVES – NORMALLY OPEN

NPT Pipe Size	Effective Orifice Diameter	Average Cv Factor	Static Pressure Rating (PSI) AC	Static Pressure Rating (PSI) DC	Max. Pressure Differential (PSI)	Maximum Flow (GPM)	Inlet Port	Outlet Port	Class B Molded Coil 1/2" NPT Conduit Enclosure	Const. Ref.
1/8"	3/32	0.15	3000		3000	9	3	2	A15LB13002	87
	3/32	0.15	3000		3000	8.5	2	1	A15LB13002	87
	3/32	0.15		3000	3000	9	3	2	A156LB13001	87
	3/32	0.15		3000	3000	8.5	2	1	A156LB13001	87

DIRECT ACTING TYPE A16 AND A166 STAINLESS STEEL VALVES – DIRECTIONAL CONTROL

NPT Pipe Size	Effective Orifice Diameter	Average Cv Factor	Static Pressure Rating (PSI) AC	Static Pressure Rating (PSI) DC	Max. Pressure Differential (PSI)	Maximum Flow (GPM)	Inlet Port	Outlet Port	Class B Molded Coil 1/2" NPT Conduit Enclosure	Const. Ref.
1/8"	3/32	0.15	3000		2000	7	2	3	A16LB13002	87
	3/32	0.15	3000		2000	7	2	1	A16LB13002	87
	3/32	0.15		3000	2000	7	2	3	A166LB13001	87
	3/32	0.15		3000	2000	7	2	1	A166LB13001	87

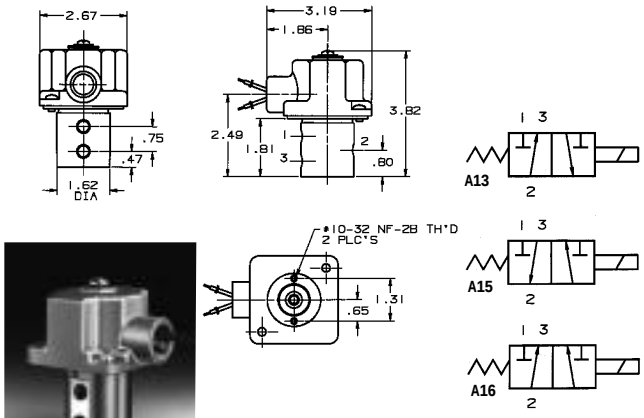

Port Identification:

A13	A15	A16
1-IN	Exhaust	NC
2-Cylinder	Cylinder	IN
3-Exhaust	IN	NO

#87

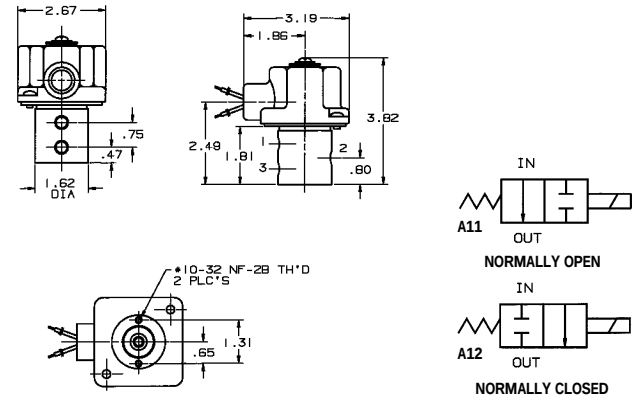

Port Identification:

A11	A12
1-Plugged	1-IN
2-OUT	2-OUT
3-IN	3-Plugged

#134

SKINNER MB Series Three-Way Direct Acting Valves

SPECIFICATIONS

Product Description

MB Series valves are designed for the actuation of small air cylinders and clamps, and are suited for applications requiring low air flow.

The valves are direct acting, multipurpose valves with all ports in the body. The valve body is molded from plastic, while the internal parts are nylon, polyester and stainless steel. The valves will operate at up to 150 PSI, consuming only 4 watts per coil on AC operation, 5 watts per coil on DC.

Functional design flexibility is assured given the wide variety of available valve configurations. The listed accessories enable the user to customize MB Series valves as 2-way normally open or normally closed by plugging one port; 3-way normally open, normally closed or directional control; and 4-way normally closed-normally open, normally open-normally open, and normally closed-normally closed.

Mechanical Characteristics

Standard Materials of Construction

- Body–Plastic
- Seals–NBR
- Sleeve–Stainless Steel (304)
- Plunger–Stainless Steel (430FR)
- Stop–Stainless Steel (430FR)
- Springs—Stainless Steel (17-7PH)
- Shading Ring–Copper (AC valves only)
- Manifold Bases–Zinc

Compatible Media

- Lubricated Air, Non-Lubricated Air, and Inert Gases compatible with materials of construction.

Electrical Characteristics

Voltages

- DC–12, 24, 120
- AC–24/60, 120/60, 240/60

Power Consumption

- 4 watts AC per coil
- 5 watts DC per coil

Miscellaneous

Operating Speed

- Up to 1000 cycles per minute.

Response Time

- AC–Approximately 3-12 milliseconds to open, 5-16 milliseconds to close.
- DC–Approximately 8-14 milliseconds to open, 5-15 milliseconds to close.

Leakage

- Internal–Maximum 3 SCCM at 150 PSI.
- External–None.

Standard Valve Construction

Coil Type

- Class A taped with lead

Enclosure Type

- Slotted enclosure for leaded coils.

DIRECT ACTING THREE-AND FOUR–WAY MB VALVES

Pipe Size	Orifice Diameter		Cv Factor		Operating Pressure (PSI)		Wattage		Class A Taped Leaded Coil	Const. Ref.
	NC Port	NO Port	NC Port	NO Port	Minimum	Maximum	AC	DC		
#10-32 UNF 2B	3/64	3/64	0.032	0.028	0	150	4	5	MBD002	88
Subbase Ported	3/64	3/64	0.032	0.028	0	150	4	5	MBD005	88
1/8" NPT Manifold	3/64	3/64	0.032	0.028	0	150	8	10	MBD009	89

Ordering Instructions for Multiple Station Manifolds

Step 1: Determine the number of valve stations required. This will equal the number of subbase valves to order (MBD005).

Step 2: Select the combination of two- and three-station manifolds that sum to equal the number of valve stations required (i.e. five stations total = one three-station and one two-station manifold).

Step 3: Choose the accessory kits required to complete the system and determine if you want the valves assembled to the manifolds at the factory.

Step 4: Specify the required voltage.

Example:

1) You have selected a valve which is to be manifolded.

2) Your system requires a five-station manifold (i.e. one three-station manifold attached to one two-station manifold).

3) You require the manifold bases and an interface kit. You decide to assemble the valves and manifolds. If they were to be assembled by the factory, there would be a price-add.

4) Your system is 120/60 watts AC: Your order should read:

5-MBD005, 120/60
1-MB-60-S001
1-MB-60-S002
1-MB-60-S003
1-MB-60-S005
1-MB-60-S006

MB Series Three-Way Direct Acting Valves

Valve Accessories

Accessories	Contents	Part Number
2-Station Manifold Base Kit (for mounting 2 valves)	4 Pipe plugs 4 No. 5 self tapping screws	MB-60-S001
3-Station Manifold Base Kit (for mounting 3 valves)	5 Pipe plugs 6 No. 5 self tapping screws	MB-60-S002
Manifold Interface Kit (connects 2 manifold bases)	1 No. 8 screw 2 ”O” rings	MB-60-S003
Manifold Blank Station Kit (for sealing an unused station)	1 Plate 2 ”O” rings 2 Screws	MB-60-S004
2-Station Manifold Base const. ref. 90	1 MB-01-003 manifold block 2 V1-31-254 nuts assembled	MB-60-S005
3-Station Manifold Base const. ref. 90	1 MB-01-004 manifold block 2 V1-31-254 nuts assembled	MB-60-S006

For ordering instructions see Ordering Information section on page 10 and 114.

DRAWINGS

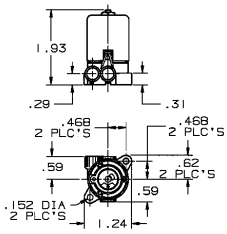

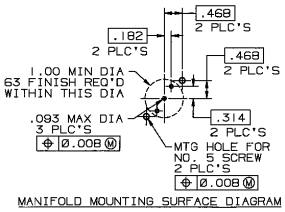

MANIFOLD MOUNTING SURFACE DIAGRAM

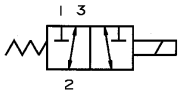

Port Identification:
1-NC/ 2-Common/ 3-NO

#88

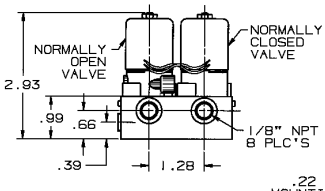

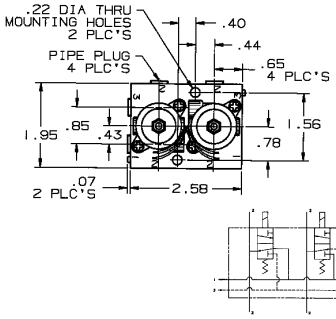

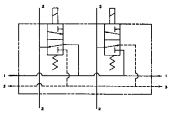

Port Identification:
1-IN/ 2-Cylinder/ 3-Exhaust

#89

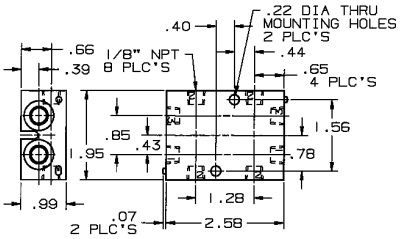

2 STATION

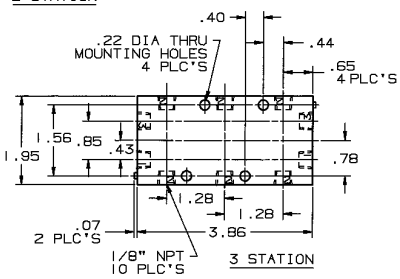

3 STATION

#90

SKINNER High Pressure Hydraulic A-35 Series

Four-Way Direct Acting Valves

SPECIFICATIONS

Product Description

The A35 Series 4-way spool valve is designed for high pressure hydraulic applications up to 2000 PSI. The valves are also available for cage mounting without pipe connections. In this type of mounting, the valve spool is encased in a cartridge or cage which is inserted into a machined cavity in the customer's matching part. O-rings are supplied with the valve.

Mechanical Characteristics

Standard Materials of Construction

- Body–Stainless Steel (430F)
- Flange Seals–NBR
- Sleeve–Stainless Steel (304)
- Plunger–Stainless Steel (430FR)
- Stop–Stainless Steel (430FR)
- Springs–Stainless Steel (18-8)
- Shading Ring–Copper (AC only)
- Spool–Stainless Steel (17-4PH)

Compatible Fluids

- Hydraulic Fluids. For other media consult Skinner Valve.

Electrical Characteristics

Voltages

- DC–12, 24, 120
- AC–24/60, 120/60, 240/60 (other AC/DC voltages available upon request)

Power Consumption

- 16 watts AC
- 14 watts DC

Miscellaneous

Operating Speed

- Up to 300 cycles per minute.

Response Time

- AC–Approximately 4-8 milliseconds to open or close.
- DC–Approximately 10-15 milliseconds to open, 6-12 milliseconds to close.

Leakage

- Internal–80 cc/min. maximum at 1000 PSI.
- External–None.

Valve Construction Alternatives

Coil Types

- Class B molded leaded
- Class F molded leaded.

Enclosure Type

- Die-cast zinc coil enclosure with 1/2" NPT conduit.

Mounting

- Cage mounting without pipe connection available. Consult factory for details.

A-35 SERIES HIGH PRESSURE HYDRAULIC VALVES

NPT Pipe Size	Effective Orifice Diameter	Average Cv Factor	Static Pressure Rating (PSI) AC	Static Pressure Rating (PSI) DC	Max. Pressure Differential (PSI)	Maximum Flow (GPM)	Inlet Port	Outlet Port	Class B Molded 1/2" NPT Conduit Enclosure	Const. Ref.
1/8"	0.086	0.13	2000		2000	6.3	1	2	A35LB12002	92
	0.086	0.13				6.3	1	4		
	0.082	0.12				5.8	2	3		
	0.082	0.12				5.8	4	3		
1/8"	0.086	0.13		2000	2000	6.3	1	2	A356LB12001	92
	0.086	0.13				6.3	1	4		
	0.082	0.12				5.8	2	3		
	0.082	0.12				5.8	4	3		

Note: Cv factor and maximum flow varies according to the flow path.

A-35 SERIES VALVE OPTIONS

Optional Feature	Option Code
Molded class F leaded coil	LF

DRAWINGS

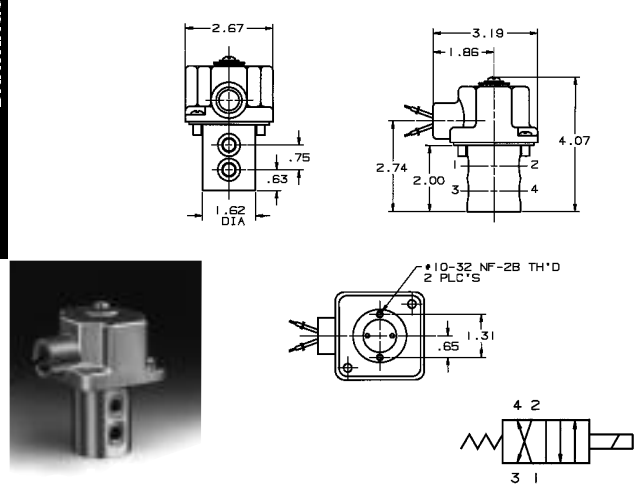

#92

Port Identification:
1-IN/ 2-NC/ 3-Exhaust/ 4-NO

SKINNER K Series Three-Way Poppet Valves

SPECIFICATIONS

Product Description

K-Series solenoid valves include a broad range of 3- and 4-way models designed to satisfy most pneumatic application requirements. Although small in size, each valve includes features and performance capabilities usually found only on larger, more expensive solenoid valves.

All models are supplied with non-locking manual overrides with either lead wire or plug-in connectors. The valves with plug-in connectors include LED status indicators, reverse voltage protection and surge suppression.

Mechanical Characteristics

Standard Materials of Construction

- Body and Components—Plastic (Acetal and Polyphenylene Sulfide)
- Brass and Stainless Steel
- Seals—NBR
- Subbase and Manifold Body—Aluminum

Compatible Fluids

- Non-lubricated or lubricated air and inert gases.

Pipe Sizes

- All subbases and manifolds—M3 or M5 cylinder ports.

Electrical Characteristics

Voltages

- 5VDC, 6VDC, 12VDC, 24VDC, 48VDC, 24V/60HZ, 120V/60HZ (depending on model).

Allowable Voltage Variation

- AC: +10%—10 rated voltage.
- DC: +10%—15 rated voltage.

Electrical Connections

- 11- inch leaded, 22 gauge as standard. Optional plug-in connector with 19-inch leads.

Current Drain

- 0.5 watt-6 milliamps, 1.8 watts-22 milliamps.

Miscellaneous

Filtration

- Down to 40 microns recommended.

Lubrication

- None required, valves are prelubricated.

Ambient Temperature Rating

- +40 to 120°F

K SERIES K3P, K3H, K3F VALVES—THREE-WAY, POPPET

Pressure Range (PSI)		Cv		Watts		Valve	Electrical*	Response Time (seconds)		Model	Const.
Min.	Max.	P to Cyl.	Cyl. to R	DC	AC	Function	Connections	On	Off	Number	Ref.
0	100	0.01	0.02	0.5	0.5	NC	Lead Wire	0.005	0.005	K3P01	94
0	100	0.01	0.02	0.5	0.5	NC	Plug-in	0.005	0.005	K3P02	94
0	114	0.02	0.02	1.8	1.8	NC	Lead Wire	0.005	0.005	K3P03	94
0	114	0.02	0.02	1.8	1.8	NC	Plug-in	0.005	0.005	K3P04	94
28	100	0.1	0.1	0.5	NA	NO	Lead Wire	0.010	0.020	K3H01	93
28	100	0.1	0.1	0.5	NA	NO	Plug-in	0.010	0.020	K3H02	93
28	100	0.1	0.1	0.5	NA	NC	Lead Wire	0.010	0.020	K3H03	93
28	100	0.1	0.1	0.5	NA	NC	Plug-in	0.010	0.020	K3H04	93
0	100	0.005	0.005	0.5	NA	NC	Lead Wire	0.005	0.005	K3F01	95
0	100	0.005	0.005	0.5	NA	NC	Plug-in	0.005	0.005	K3F02	95

** Lead wire: 11" lead wire. Plug-in: Connector with 19" leads, indicator light and surge suppressor. NC = Normally Closed, NO = Normally Open*

K SERIES VALVE VOLTAGES

Voltage	K3P 0.5 Watt	1.8 Watts	K3H 0.5 Watt	K3F 0.5 Watt
5VDC	*	NA	*	*
6VDC	NA	*	*	*
12VDC	*	*	*	*
24VDC	*	*	*	*
48VDC	NA	NA	*	*
24VAC/60Hz	NA	*	NA	NA
120VAC/60Hz	*	*	NA	NA

** Valves may be ordered for use with these specific voltages.*

K Series Three-Way Poppet Valves

K SERIES VALVE MANIFOLDS

Type	K3PModel Number	K3PManifold Dimensions P (inches)	K3PManifold Dimensions L (inches)	K3H Number	K3H Manifold Dimensions P(inches)	K3H Manifold Dimensions L(inches)	K3F Model Number	K3F Manifold Dimensions P(inches)	K3F Manifold Dimensions L(inches)
Subbase	K01-001			KH-01-001	0.87	1.10	KF-01-001	0.30	0.65
2-Station	K01-021	1.61	1.89	KH-01-002	1.28	1.67	KF-01-002	1.08	1.28
3-Station	K01-022	2.24	2.52	KH-01-003	1.69	2.09	KF-01-003	1.50	1.69
4-Station	K01-002	2.87	3.15	KH-01-004	2.11	2.50	KF-01-004	1.91	2.11
5-Station	K01-023	3.50	3.78	KH-01-005	2.52	2.91	KF-01-005	2.32	2.52
6-Station	K01-003	4.13	4.41	KH-01-006	2.93	3.33	KF-01-006	2.74	2.93
7-Station	K01-024	4.76	5.04	KH-01-007	3.35	3.74	KF-01-007	3.15	3.35
8-Station	K01-004	5.39	5.67	KH-01-008	3.76	4.15	KF-01-008	3.56	3.76
9-Station	K01-025	6.02	6.30	KH-01-009	4.17	4.57	KF-01-009	3.98	4.17
10-Station	K01-005	6.65	6.93	KH-01-01-	4.59	4.98	KF-01-010	4.39	4.59
Station Blanking Plate	K16-001	-	-	KH-16-001	-	-	KF-16-001	-	-
Valve Mounting Kit	-	-	-	KH-60-S001	-	-	KF-60-S001	-	-

See dimensional diagrams for inlet and exhaust port sizes.

DRAWINGS

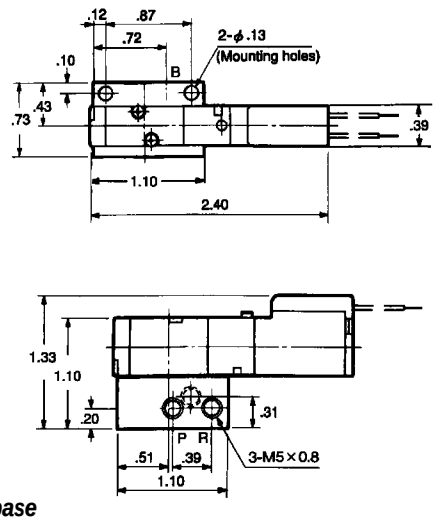

#93 K3H on a subbase

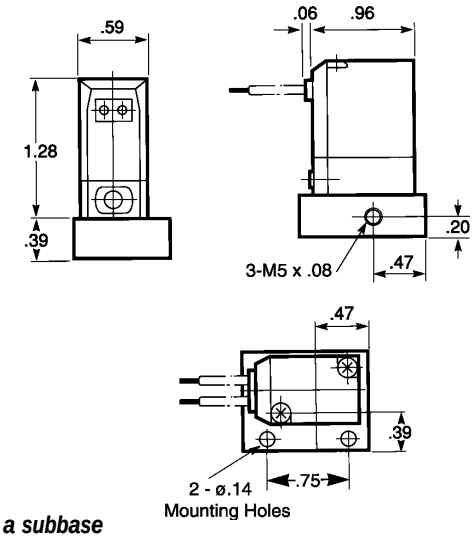

#94 K3P on a subbase

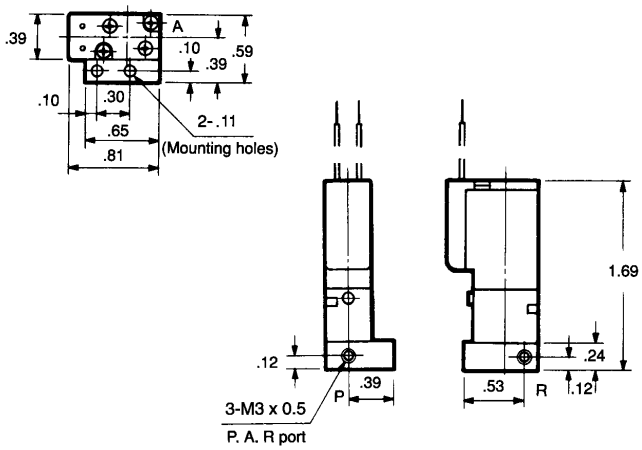

#95 K3F on a subbase

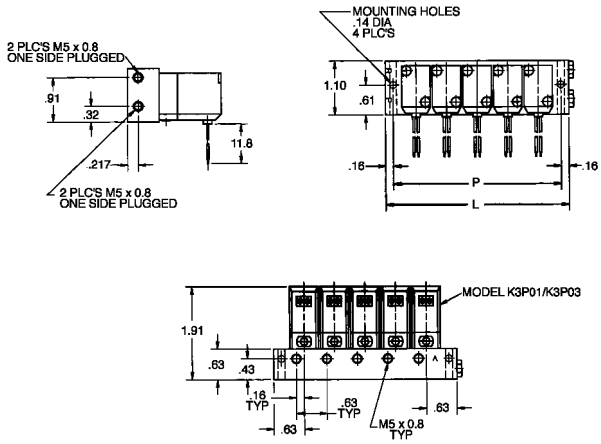

#94A K3P on a subbase

SKINNER K Series Four-Way Valves

SPECIFICATIONS

Mechanical Characteristics

Standard Materials of Construction

- Body and Components–Plastic (Acetal and Polyphenylene Sulfide)
- Brass and Stainless Steel
- Seals–NBR
- Subbase and Manifold Body–Aluminum

Compatible Fluids

- Non-lubricated or lubricated air and inert gases.

Pipe Sizes

- All subbases and manifolds have M5x0.8, 1/8" NPT or 1/4" NPT ports depending on model.

Electrical Characteristics

Voltages

- 5VDC, 6VDC, 12VDC, 24VDC, 48VDC, 24V/60HZ, 120V/60HZ (depending on model).

Allowable Voltage Variation

- AC: +10–10 percent rated voltage.
- DC: +10–15 percent rated voltage.

Electrical Connections

- 11- inch leaded, 22 gauge as standard. Optional plug-in connector with 19-inch leads.

Current Drain

- 0.5 watt - 6 milliamps, 1.8 watts - 22 milliamps.

Miscellaneous

Filtration

- Down to 40 microns recommended.(5 micron for K4M valves).

Lubrication

- None required, valves are prelubricated.

Ambient Temperature Rating

- +40 to 120°F

K SERIES K4H VALVES–FOUR-WAY, PILOT OPERATED, SINGLE AND DOUBLE SOLENOID

Pressure (PSI)					Solenoid	Electrical	Response Time (seconds)		Model
Min	Max	Cv	Watts	Porting	Model	Connection #	On	Off	Number
28	100	0.1	0.5	Base mounted	Single	Lead wire	0.01	0.02	K4H01
28	100	0.1	0.5	Base mounted	Single	Plug-in	0.01	0.02	K4H02
28	100	0.1	0.5	Base mounted	Single	PCB	0.01	0.02	K4H03
28	100	0.1	0.5	Body ported	Single	Lead wire	0.01	0.02	K4H04
28	100	0.1	0.5	Body ported	Single	Plug-in	0.01	0.02	K4H05
28	100	0.1	0.5	Base mounted	Double	Lead wire	0.01	0.02	K4H06
28	100	0.1	0.5	Base mounted	Double	Plug-in	0.01	0.02	K4H07
28	100	0.1	0.5	Base mounted	Double	PCB	0.01	0.02	K4H08
28	100	0.1	0.5	Base mounted	Single	PCB	0.01	0.02	K4H09*
28	100	0.04	0.5	Base mounted	Double	Plug-in	0.01	0.02	K4H10**

 # Lead wire: 11" lead wire. Plug-in: Connector with 19" leads, indicator light and surge suppressor. PCB: connector with studs.
** K4H09 PCB connector is pointing vertically upwards.*

** K4H10 is a double solenoid. 3-position model with all ports blocked in center position. Models with cylinder ports open to exhaust or open to pressure are available upon request. All models contain captured exhaust porting.*

K4H VALVE VOLTAGES

Voltage	K4H 0.5 Watt
5VDC	*
6VDC	*
12VDC	*
24VDC	*
48VDC	*
24VAC/60Hz	NA
120VAC/60Hz	NA

** Valves may be ordered for use with these specific voltages.*

K4H VALVE MANIFOLDS

Manifolds		K4H Manifold Dimensions	
Type	K4H Style	P (inches)	L (inches)
Subbase	KH-01-001	0.87	1-1
2-Station	KH-01-002	1.28	1.67
3-Station	KH-01-003	1.69	2.09
4-Station	KH-01-004	2.11	2.5
5-Station	KH-01-005	2.52	2.91
6-Station	KH-01-006	2.93	3.33
7-Station	KH-01-007	3.35	3.74
8-Station	KH-01-008	3.76	4.15
9-Station	KH-01-009	4.17	4.57
10-Station	KH-01-010	4.59	4.98
Station Blanking Plate**	KH-16-001	-	-
Valve Mounting Kit*	KH-60-S001	-	-

** Mounting kits consist of 10 gaskets and 20 mounting screws. See dimensional diagrams for inlet and exhaust port sizes.*
***Includes plate, gasket, 2 screws.*

K Series Four-Way Valves

DRAWINGS

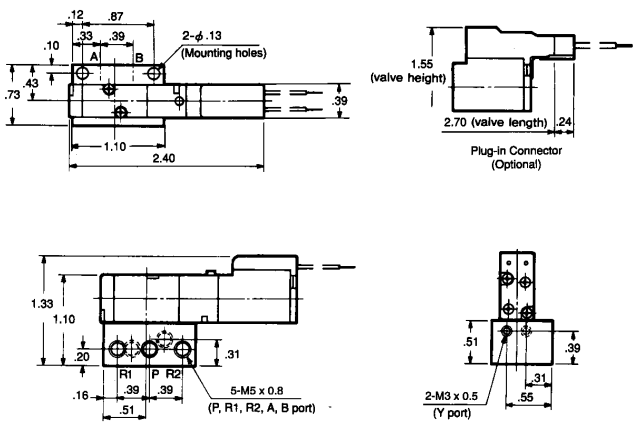

K4H01 on a subbase

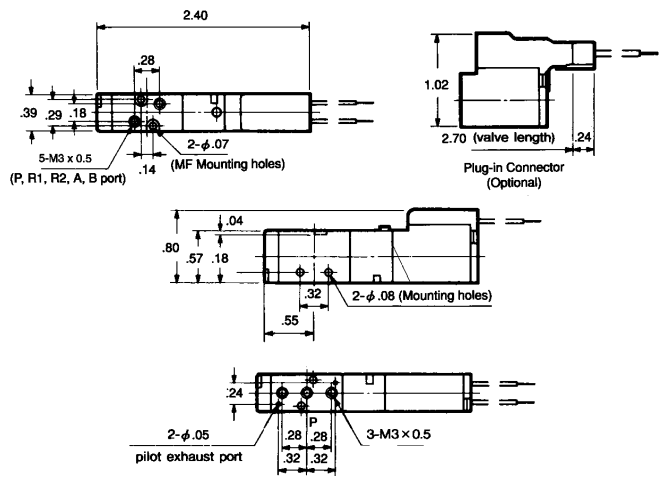

K4H01 on a subbase

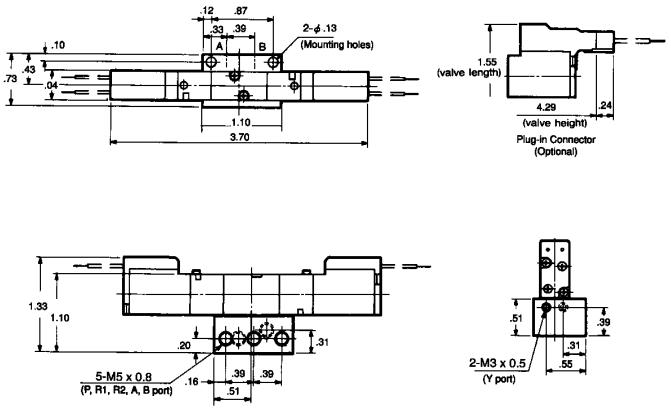

K4H06 on a subbase

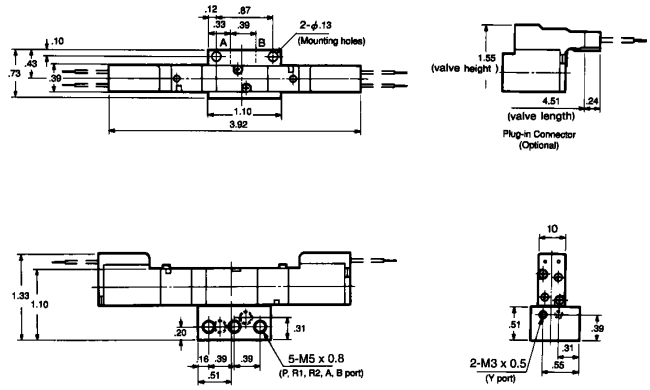

K4H10 on a subbase

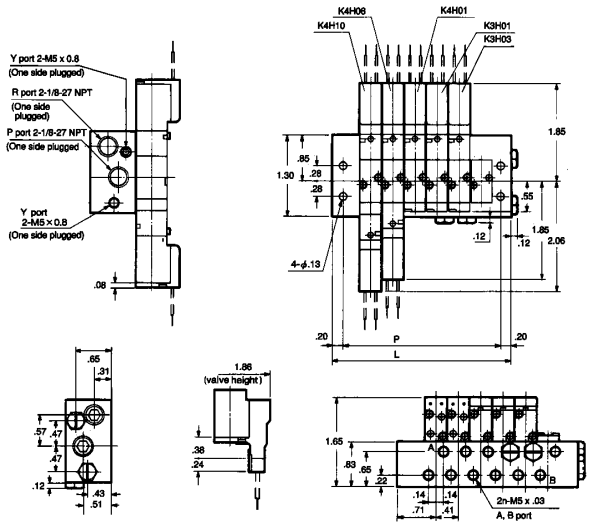

K4H on a manifold

K SERIES K4M VALVES – FOUR-WAY, DIRECT ACTING, SINGLE AND DOUBLE SOLENOID

Pressure (PSI)							Response Time (seconds)		
Min	Max	Cv	Watts	Porting	Solenoid Model	Electrical Connection #	On	Off	Model Number
0	120	0.04	2	Base Mounted	Single	Lead wire	0.005	0.005	K4M01
0	120	0.04	2	Base Mounted	Single	Plug-in	0.005	0.005	K4M02
0	120	0.04	2	Base Mounted	Single	PCB	0.005	0.005	K4M03
0	120	0.04	2	Body Ported	Single	Lead wire	0.005	0.005	K4M04
0	120	0.04	2	Body Ported	Single	Plug-in	0.005	0.005	K4M05
0	120	0.04	2	Base Mounted	Double	Lead wire	0.005	0.005	K4M06
0	120	0.04	2	Base Mounted	Double	Plug-in	0.005	0.005	K4M07
0	120	0.04	2	Base Mounted	Double	PCB	0.005	0.005	K4M08

* *Lead wire: 11" lead wire. Plug-in: Connector with 19" leads, indicator light and surge suppressor. PCB: connector with studs.*

K4M VALVE VOLTAGES

Voltage	K4M 2.0 Watt
5VDC	NA
6VDC	NA
12VDC	*
24VDC	*
48VDC	NA
24VAC/60Hz	NA
120VAC/60Hz	NA

* *Valves may be ordered for use with these specific voltages.*

K4M VALVE MANIFOLDS

Manifold Type	Cylinder Port Size*		Manifold Assem. Dim. M3 Threads		Manifold Assem. Dim. M5 UNF Threads	
	M3	M5	L (inches)	P (inches)	L (inches)	P (inches)
Subbase	KM-01-001	KM-01-002	-	-	-	-
2-Station	KM-01-003	KM-01-004	1.61	1.34	2.09	1.34
3-Station	KM-01-005	KM-01-006	2.01	1.73	2.48	1.73
4-Station	KM-01-007	KM-01-008	2.40	2.13	2.87	2.13
5-Station	KM-01-009	KM-01-010	2.80	2.52	3.27	2.52
6-Station	KM-01-011	KM-01-012	3.19	2.91	3.66	2.91
7-Station	KM-01-013	KM-01-014	3.58	3.31	4.06	3.31
8-Station	KM-01-015	KM-01-016	3.98	3.70	4.45	3.70
9-Station	KM-01-017	KM-01-018	4.37	4.09	4.84	4.09
10-Station	KM-01-019	KM-01-020	4.76	4.49	5.24	4.49
Station Blanking Plate	KM-16-001	KM-16-001				
Mounting Bracket**	KM-19-001	KM-19-001				
Mounting Spacer for PCB Mounting	See Accessories					
Valve Mounting kit	KM-60-023					

* *See dimensional diagrams for inlet and exhaust port sizes.*
***Supplied on all body ported valves.*

DRAWINGS

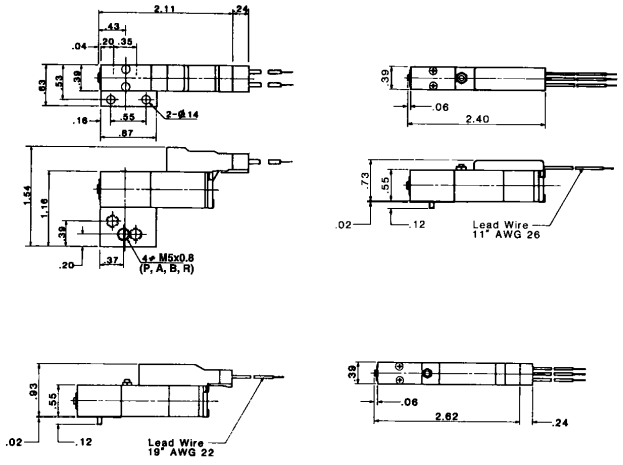

K4M02 on KM-01-022 subbase

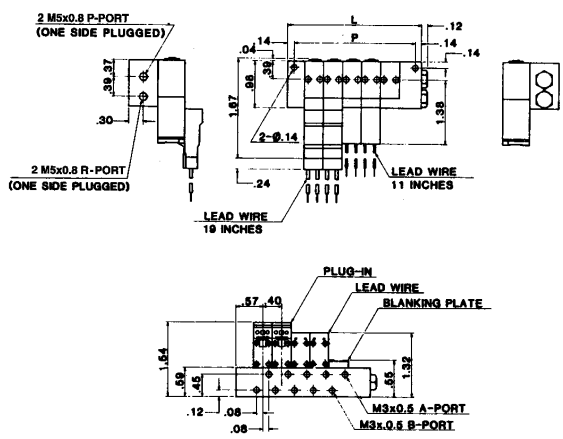

Manifold mounted M3 threads

K Series Four-Way Valves

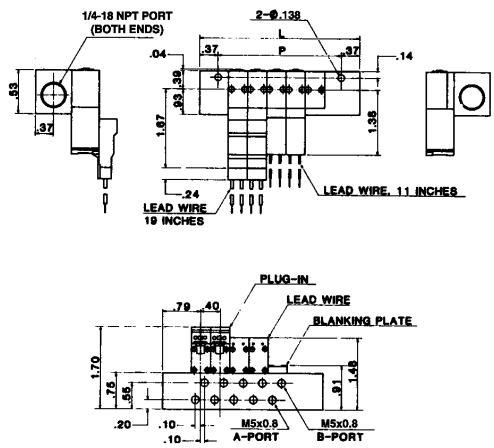

K4M manifold mounted M5 threads

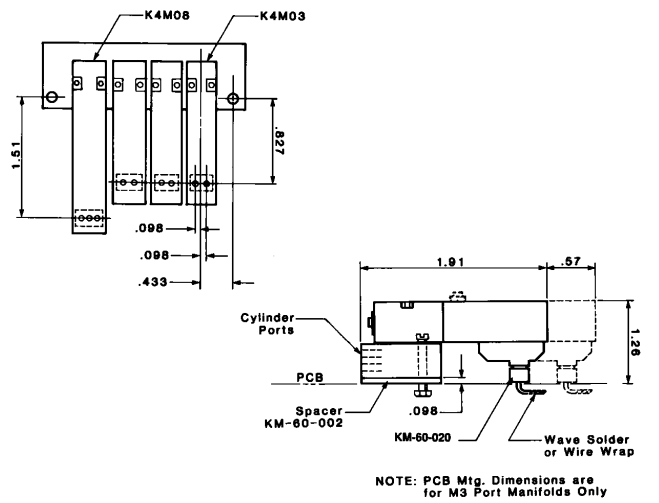

K4M printed circuit board mounting option (K4M03 and K4M08)

K SERIES K4P VALVES – FOUR-WAY, PILOT OPERATED

Pressure Range (PSI)		Cv		Watts		Electrical* Connections	Response Time (seconds)		Model Number
Min	Max	P to Cyl	Cyl to R	DC	AC		On	Off	
21	100	0.02	0.02	0.5	0.5	Lead Wire	0.007	0.008	K4P01
21	100	0.02	0.02	0.5	0.5	Plug-in	0.007	0.008	K4P02
21	114	0.02	0.02	1.8	1.8	Plug-in	0.006	0.008	K4P03
21	114	0.02	0.02	1.8	1.8	Lead Wire	0.006	0.008	K4P04

** Lead wire: 11" lead wire. Plug-in: Connector with 19" leads, indicator light and surge suppressor.*

K4P VALVE VOLTAGES

Voltage	K4P .5 Watt	1.8 Watts
5VDC	*	NA
6VDC	NA	*
12VDC	*	*
24VDC	*	*
48VDC	NA	NA
24VAC/60Hz	NA	*
120VAC/60Hz	*	*

** Valves may be ordered for use with these specific voltages.*

K4P VALVE MANIFOLDS

Type	K4PCatalog Number	K4PManifold Dimensions	
		P(inches)	L(inches)
Subbase	K01-006	-	-
2-Station	K01-026	1.61	1.89
3-Station	K01-027	2.24	2.52
4-Station	K01-007	2.87	3.15
5-Station	K01-028	3.50	3.78
6-Station	K01-008	4.13	4.41
7-Station	K01-029	4.76	5.04
8-Station	K01-009	5.39	5.67
9-Station	K01-030	6.00	6.30
10-Station	K01-010	6.65	6.93
Station Blanking Plate	K16-001		

Subbases contain all M5 ports. Multi-station manifolds have common pressure and exhaust ports with 1/8" NPT threads; cylinder ports are M5.

K Series Four-Way Valves

DRAWINGS

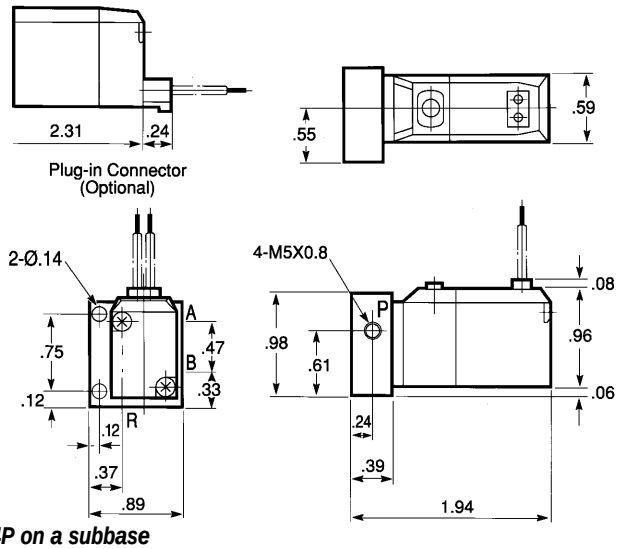

K4P on a subbase

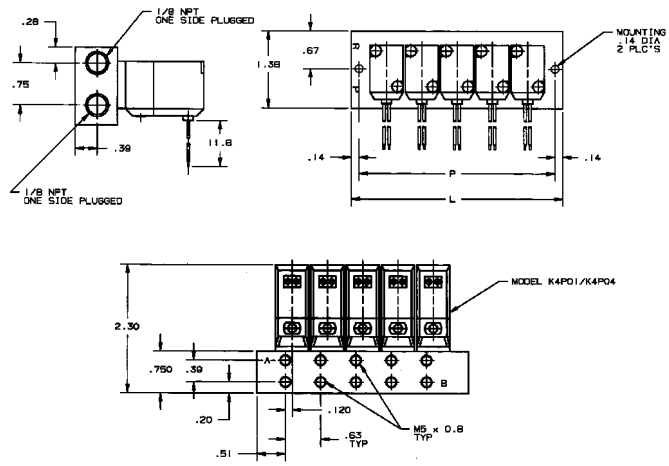

K4P on a manifold

K SERIES K4R, K4RL VALVES

Pressure (PSI) Min	Pressure (PSI) Max	Cv	Watts	Exhaust Porting*	Electrical Connection#	Response Time (seconds) On	Response Time (seconds) Off	Model Number
Single Solenoid, 2-position								
28	100	0.2	0.5	STD	Lead wire	0.02	0.02	K4R01
28	100	0.2	0.5	STD	Plug-in	0.02	0.04	K4R02
28	100	0.2	0.5	I	Lead wire	0.02	0.02	K4R03
28	100	0.2	0.5	I	Plug-in	0.02	0.04	K4R04
Double Solenoid, 2-Position								
28	100	0.2	0.5	STD	Lead wire	0.015	0.015	K4R05
28	100	0.2	0.5	STD	Plug-in	0.015	0.015	K4R06
28	100	0.2	0.5	I	Lead wire	0.015	0.015	K4R07
28	100	0.2	0.5	I	plug-in	0.015	0.015	K4R08
Latching, Single Solenoid, 2-position								
28	100	0.2	1.8	STD	Lead wire	0.02**	0.02	K4RL01##
28	100	0.2	1.8	STD	Plug-in	0.02	0.02	K4RL02##

** I= individual tapped exhaust in valve body. STD=Standard exhaust through base.*
 # Lead wire: 11" lead wire. Plug-in: Connector with 19" leads, indicator light and surge suppressor.
***Minimum energization time for K4RL valves is 0.05 seconds.*
##K4RL valves suitable for 5V, 12V and 24VDC service only.

K SERIES K5R VALVES

Pressure (PSI) Min	Pressure (PSI) Max	Cv	Watts	Exhaust Porting*	Electrical Connection#	Response Time (seconds) On	Response Time (seconds) Off	Model Number
Double Solenoid, 3-position, all ports blocked in center position								
28	100	0.14	0.5	STD	Lead wire	0.02	0.03	K5R01
28	100	0.14	0.5	STD	Plug-in	0.02	0.04	K5R02
Double Solenoid, 3-Position, cylinder ports open to exhaust in center position								
28	100	0.14	0.5	STD	Lead wire	0.02	0.03	K5R03
28	100	0.14	0.5	STD	Plug-in	0.02	0.04	K5R04
Double Solenoid, 3-Position, cylinder ports open to pressure in center position								
28	100	014	0.5	STD	Lead wire	0.02	0.03	K5R05
28	100	0.14	0.5	STD	Plug-in	0.02	0.04	K5R06

** =individual tapped exhaust in valve body. STD=Standard exhaust through base.*
 # Lead wire: 11" lead wire. Plug-in: Connector with 19" leads, indicator light and surge suppressor.

K Series Four-Way Valves

K4R, K4RL, K5R VALVE VOLTAGES

Voltage	K4R .5 Watt	K4RL 1.8 Watts	K5R 0.5 Watt
5VDC	*	*	*
6VDC	NA	NA	NA
12VDC	*	*	*
24VDC	*	*	*
48VDC	NA	NA	NA
24VAC/60Hz	*	NA	*
120VAC/60Hz	*	NA	*

** Valves may be ordered for use with these specific voltages.*

K4R, K4RL, K5R VALVE MANIFOLDS

K4R/K5R Manifolds			Manifold Dimensions	
Type	Standard Porting	Individual Porting	P(inches)	L(inches)
Subbase	KR-01-001	Not Available	0.94	1.42
2-Station	KR-01-002	KR-01-011	1.61	1.89
3-Station	KR-01-003	KR-01-012	2.24	2.52
4-Station	KR-01-004	KR-01-013	2.87	3.15
5-Station	KR-01-005	KR-01-014	3.50	3.78
6-Station	KR-01-006	KR-01-015	4.13	4.41
7-Station	KR-01-007	KR-01-016	4.76	5.04
8-Station	KR-01-008	KR-01-017	5.39	5.66
9-Station	KR-01-009	KR-01-018	6.02	6.30
10-Station	KR-01-010	KR-01-019	6.65	6.93
Station Blanking Plate	KR-16-001	KR-16-001	-	-
Valve Mounting Kit*	KR-60-S001	KR-60-S001	-	-

** Mounting kits consist of 10 gaskets and 20 mounting screws.*

Subbases contain all M5 ports. Multi-station manifolds have common pressure and exhaust ports with 1/8" NPT threads; cylinder ports are M5 x 0.8.

DRAWINGS

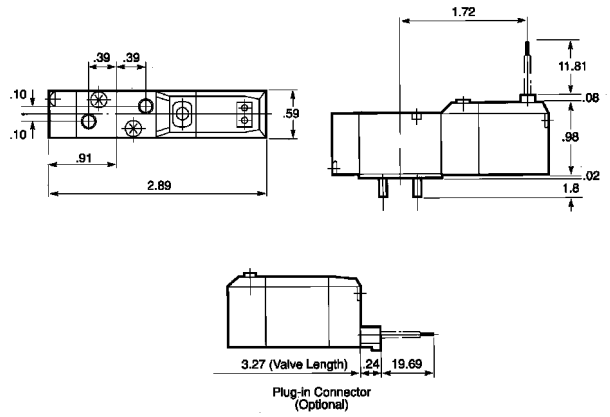

Single solenoid K4R valve

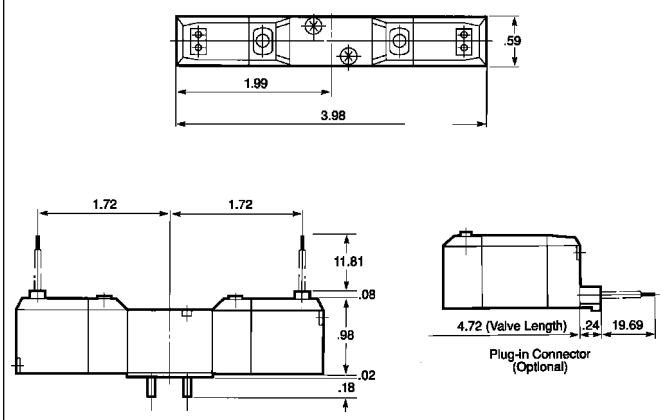

Double solenoid K4R valve

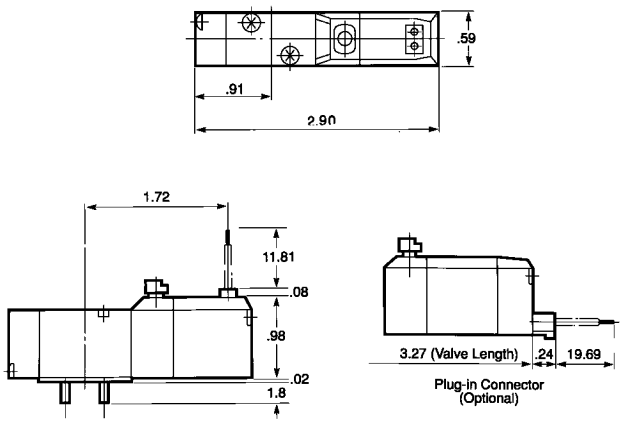

K4RL valve

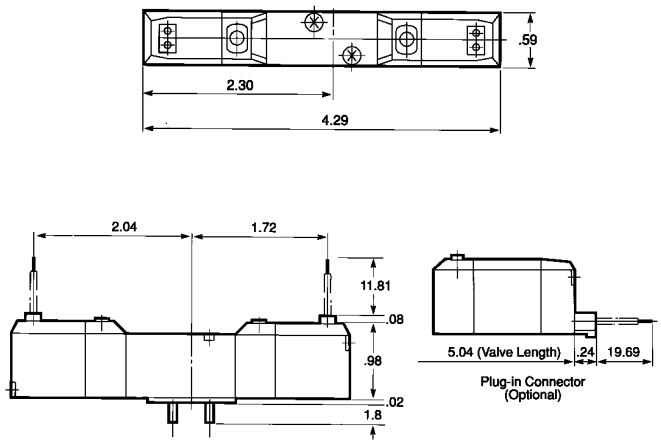

K5R valve

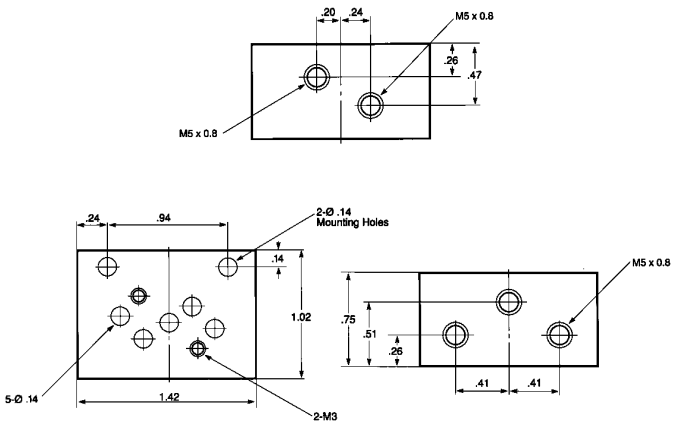

KR-01-001 subbase

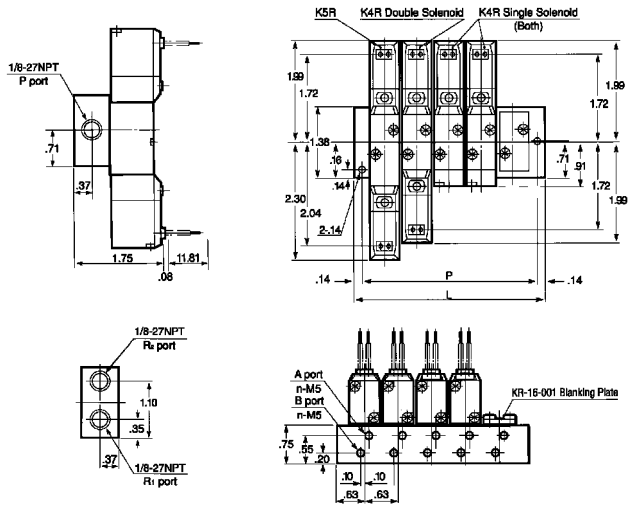

K5R and K4R valves on a manifold

EPP3 Electropneumatic Pressure Regulator

SPECIFICATIONS

Fluid

- Lubricated or non-lubricated air and neutral gases recommended filtration: 25-50u

Temperature Range

- Ambient – 10°F (0 to 50°C)
- Fluid – 10°F (0 to 50°C)

Inlet Pressure Range

- 15 to 175 PSI (1 to 12 bar). The inlet pressure must always be at least 15 PSI above the regulated pressure value.

Outlet Pressure Range

- 3 to 150 PSI (0.2 to 10 bar)

Hysteresis

- 1.5 PSI (-100 mbar). Factory set up.

Linearity

- 1% f.s.o.

Air Consumption at Constant Control Signal

- 0

Voltage

- 24 VDC + 15% (Max. ripple 1 V)

Power Consumption

- Max. 6 W with 24 VDC and constant changes of the control signal; <1W without change of control signal.

Control Signal

- U=Analog 0-10V Impedance:10k
- I=Analog 4-20 mA Impedance:0.5k

Outlet Sensor Signal

- *A)* Proportional pressure outlet signal 0-10 V from integrated sensor (recommended load resistance 0.5k)
- *B)* Proportional pressure outlet signal 4020 mA from integrated sensor (recommended load resistance 0.5 k)
- *C)* "Alarm" output signal 0/24 V with adjustable triggering level. (Difference between control signal and sensor pressure signal). (Imax = 40 mA)

  - Factory set-up: Diff. signal = + 0.8 V to + 1 V
  - Possible set-ip: Diff. signal = + 0.1 V to + 5 V

  To neutralize the alarm output signal during the control signal changes, the use of a synchronized time lag relay is required.

Indicative Response Time

- With a volume of 330 cm3 at the outlet of the regulator.

- Filling: 29 to 72 PSI (2 to 4 bar)	29 to 116 PSI (2 to 8 bar)
- Step Response: ~60 ms	~120 ms
- Emptying: 72 to 29 PSI (4 to 2 bar)	116 to 29 PSI (8 to 2 bar)
- Step Response: ~70 ms	~130 ms

Safety Position

- In case of control failure or if it is less than 1% of its full scale value, the regulated pressure drops automatically to 0 bar (atmospheric pressure). In case of voltage supply failure, the regulated pressure will be kept constant (with eventual discrepancy due to loss of pressure in the servo-chamber).

Electrical Connection

- 4 Screw terminals under the protection cover with Pg 13.5 cable gland or through DIN 43651 connector (6 P+E).

Life Expectancy

- >50 Million changes of control signal steps. NOTE: It is compulsory to set the control signal at 0 V or 4 mA each time the air pressure supply is turned off (during the night or weekend). When the air pressure supply cannot be fully exhausted, it is necessary to assure that the deviation between the control value and the inlet pressure remains smaller than 15 PSI (1 bar).

Mounting position

- Indifferent (recommended position: upright; electronic part on top).

Resistance to Vibration

- 30 g in all directions

Degree of Protection

- IP 65 (Equivalent to NEMA 4).

External Sensors

- All pressure sensors with the following characteristics are compatible with the EP-transducer.
  - Sensitivity: 15 PSI (0.5 V/bar) up to 15 PSI (10 V/bar)
  - Zero Offset: 15 PSI (-3 V/bar) to 15 PSI (10 V/bar)

Assembly

- Silicone free

Electromagnetic Compatibility

- In accordance with IEC 801-4 part 4 standards.

Typical Applications

- Paint spraying equipment
- Robotic welding
- Brake and clutch control

SUMMARY OF TYPES

	Pressure Range (PSI)	Connection NPT	With Integrated Pressure Sensor	Entry option for External Sensor Signal: Feedback Signal 0-10 V	Entry option for External Sensor Signal: Feedback Signal 4-20 mA	Outlet Signal Option: Without	Outlet Signal Option: 0-10 V 4-20 mA	Outlet Signal Option: 0-10 V 0/24 Alarm	Electrical Connection: DIN 43651 Connector	Electrical Connection: Cable Gland Pg 13.5
EPP3J0 21 U/1 100 10	150	1/4	x			x				x
21 U/1 600 10	150	1/4	x				x		x	
21 U/1 700 10	150	1/4	x					x	x	
EPP3J0 23 U/1 130 10	150	1/4		x		x			x	
24 U/1 130 10	150	1/4			x	x			x	
EPP3J0 41 U/1 100 10	150	1/2	x			x				x
41 U/1 600 10	150	1/2	x				x		x	
41 U/1 700 10	150	1/2	x					x	x	
EPP3J0 43 U/1 130 10	150	1/2		x		x			x	
44 U/1 130 10	150	1/2			x	x			x	

FLOW DATA
Outlet Pressure in Function of Flow at Constant Control Signal (P1 = 10 bar)

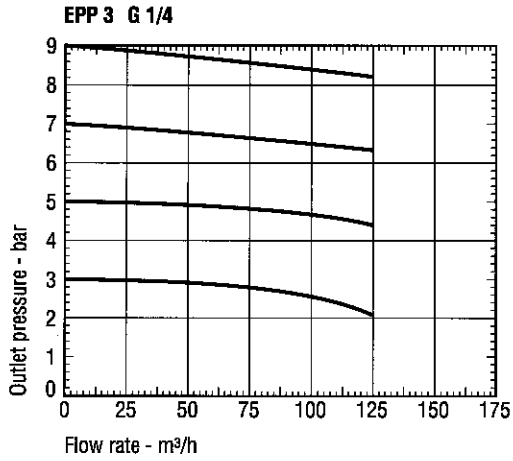

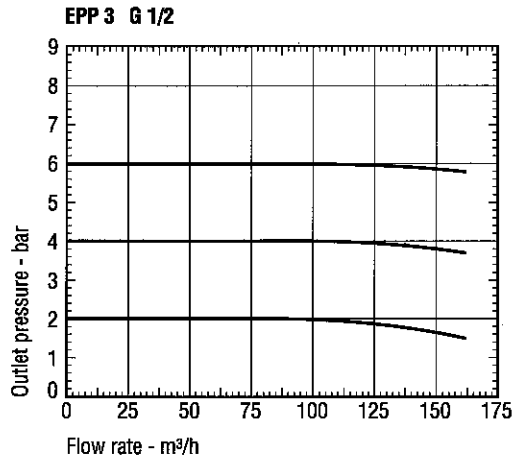

HYSTERESIS DIAGRAM

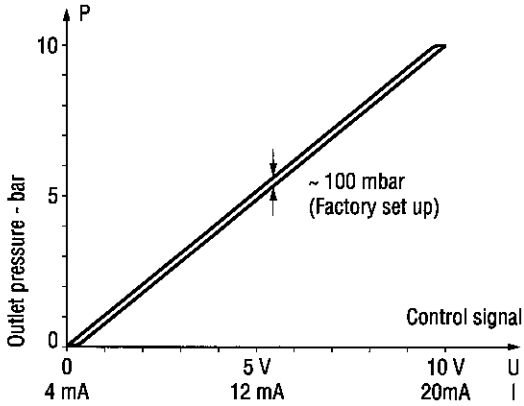

EPP3JC...130/600/700... with DIN circular plug-in connection 6 P + E (connector included)

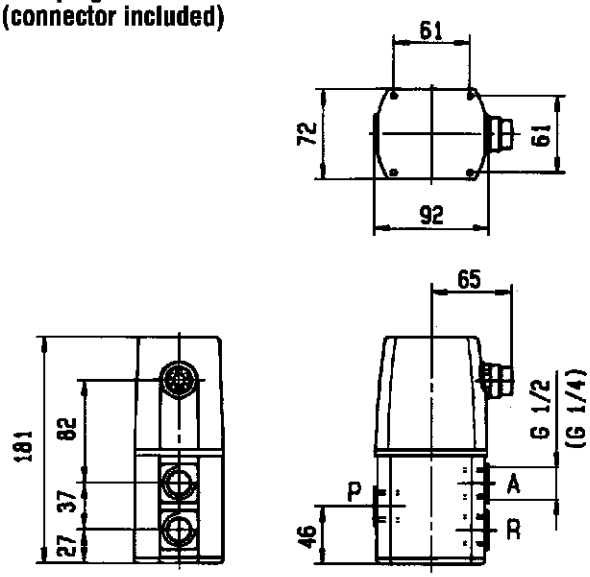

Technical Information

Introduction

Solenoid valves are highly engineered products which can be utilized in many diverse and unique fluid system applications. In addition to operational functionality, selecting the best product for a given application must also consider safety, reliability, media compatibility and suitability for the operating environment. This section provides a brief overview of the components and functional varieties of solenoid valves available from Skinner Valve. A more detailed and complete discussion on solenoid valve technology is provided in the Skinner Valve Technical Reference Manual.

General Information

Valve Construction and Basic Operation

A solenoid valve is operated by opening or closing an orifice in the valve body which permits or prevents flow through the valve. The orifice is opened or closed through the use of a plunger that is raised and lowered within a sleeve tube by energizing a solenoid. The bottom and /or top of the plunger contain soft elastomeric seals, which close off the orifice in the body or the stop respectively.

The solenoid assembly consists of a coil, plunger and sleeve assembly. In a normally closed valve a plunger return spring holds the plunger against the orifice, preventing flow through the valve. When current flows through the coil, a magnetic field is produced which turns the stop into an electro-magnet that attracts the magnetic plunger. This action compresses the return spring, allows the body orifice to open and permits fluid to flow through the valve.

Effective operation of a solenoid valve is dependent upon the efficiency of the magnetic circuit through which the flux travels. If the flux path is designed with a high level of magnetic efficiency, (i.e., with low resistance), the level of available magnetic force is improved. This is accomplished by the use of magnetically, highly conductive materials throughout the circuit.

Pressure Vessel

The combination of a body, sleeve assembly and plunger make a pressure vessel. The pressure vessel is the device that contains the process fluid. It can be completely enclosed, permitting removal of the enclosure and coil without intruding on the process stream.

The body of a valve contains the inlet and outlet ports and is the part through which flow passes when a valve is open. For most valves the fluid passes through an orifice, which is opened and closed as a result of plunger actuation. Solenoid valves are available in a wide variety of body materials. Brass, stainless steel, aluminum and plastic are some of the materials from which most valve bodies are made. The material for any given application is generally dictated by the operating environment, the process fluid and economics.

The sleeve assembly consists of three parts - the flange, tube, and stop. The flange and stop are made of magnetic material to contain and direct magnetic flux through the plunger. The tube is made of non-magnetic material to make certain that the flux is directed through the plunger rather than around it.

Since the inside surface of the sleeve assembly contacts the process fluid, it is subjected to the same line pressure as the valve body. To provide the required strength and integrity, Skinner utilizes a welded sleeve assembly. In addition to withstanding high pressures without harm, the welded construction allows the flux gap to be minimized. This increases the efficiency of the magnetic circuit and also allows for high cycle life.

The plunger is always the element that opens and closes a valve. Several different plunger configurations have been developed to support the wide variety of solenoid valve designs required to fill the needs of our customers.

Plunger seals may also be made from a variety of materials. Seal material selection depends on the particular process fluid, fluid temperature, operating pressure differential, leakage rate and cycle life requirements. Typical seal materials are NBR, FKM, Ethylene Propylene (EPDM), Neoprene and PTFE. Skinner Valve also uses a special synthetic gem material (RUBY) in applications of high temperature and/or pressure conditions.

Skinner Valve plunger assemblies, when appropriate, use floating top and bottom seals to enhance valve performance. Floating seals permit the plunger to generate a larger actuation force to open against the pressure differential in the valve. This enables the valve to operate at higher pressure ratings.

Coils and Enclosures

Solenoid valve coils are the heart of the operating mechanism of a valve. A coil is the component of an electromagnet which, when supplied with an electric current (AC or DC), produces a magnetic field. This generates a magnetic force that attracts the plunger.

Solenoid valve coil enclosures perform three important functions. The enclosure is necessary to complete the electromagnetic flux path of the solenoid, provide protection from contact with the coil, and protect the coil against environmental conditions. The coil enclosure may also provide a means for accommodating a variety of electrical connections. Skinner Valve offers enclosures of various types to suit most applications.

Coils are rated by insulation classes that correspond to a maximum allowable coil temperature. The maximum allowable coil temperature is the temperature to which the coil can be exposed without experiencing thermal degradation of the magnet wire insulation. These classes and corresponding maximum temperature levels are:

Class	Nominal Class Temperature	Permissible Temp. by Change of Resistance Method (UL)	Temp. Rise Above 25°C (77°F) Ambient Temp.
A	105°C (221°F)	110°C (230°F)	85°C (153°F)
B	130°C (266°F)	120°C (248°F)	95°C (171°F)
F	155°C (311°F)	140°C (284°F)	115°C (207°F)
H	180°C (356°F)	160°C (320°F)	135°C (243°F)

Coils meeting Classes F and H are sometimes referred to as "High Temperature Coils". These ratings are summarized graphically in Figure 1.

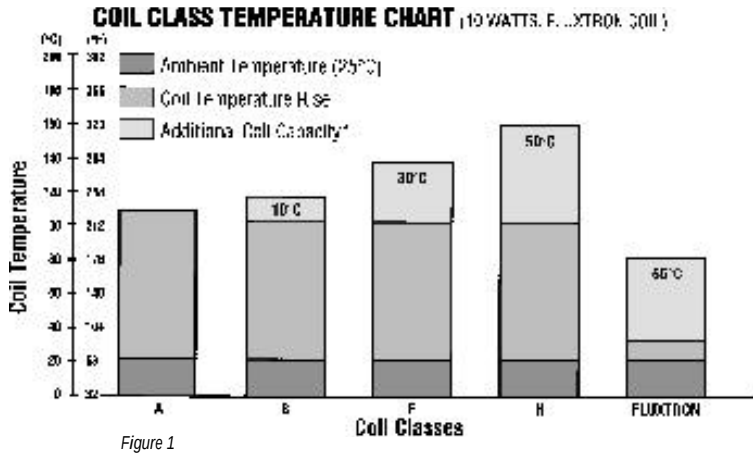

Figure 1

Valve Sizing– Determining the Flow Rate of a Valve*

Air and Gas Service

To properly size a valve for air or gas service, four specific parameters must be known:

- Upstream pressure (inlet pressure to the valve)
- Pressure differential (or downstream pressure, the outlet pressure of the valve)
- Actual flow through the valve in SCFM, or Cv required to yield the desired flow
- The gas that will be flowing through the valve, and it's specific gravity

With these parameters known, refer to chart (1) or (2). These charts provide flow (in SCFM) for a valve operating on air with a Cv Factor of 1. The charts contain identical information, but chart (2) should be used for valves with lower pressure and flow.

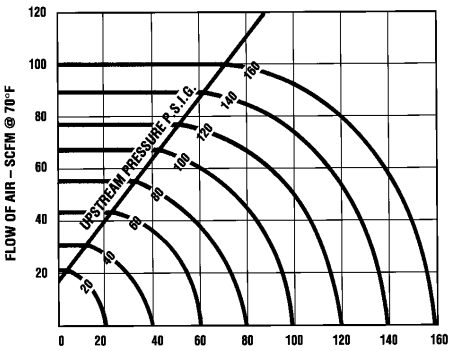

Chart 2

Steps to Determine Flow:

1) Locate the downstream pressure (outlet pressure, or upstream pressure minus the pressure differential) on the bottom scale of the chart.

2) Read vertically up the chart until the downstream pressure intersects the upstream pressure (represented by a family of curved lines.)

3) Read horizontally across the graph to the intersection with the left scale, "Flow in SCFM@ 70°F". The value indicated at this point on the scale is the flow of air through a valve with a Cv of 1.

4a) To determine the flow of a gas other than air at 70°F, use the correction factors listed below, (Air Flow x Correction Factor = Gas Flow). If the correction factor is not known it can be calculated by using the specific gravity of the gas in the following equation:

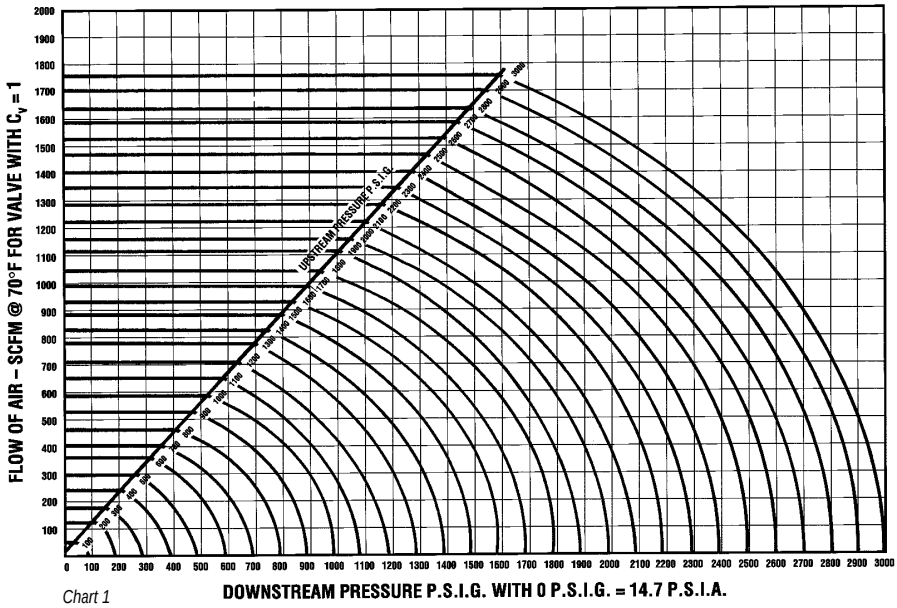

Chart 1

Correction Factor = the square root of (1/specific gravity)

Acetylene	1.05
Ammonia	1.30
Argon	0.85
Hydrogen	3.79
Methane	1.34
Neon	1.20
Nitrogen	1.02
Oxygen	0.95

4b) For selection of a valve with a different flow, simply divide the desired flow rate by the flow rate calculated from the graph to determine the correct Cv. For example, if an air flow of 150 SCFM was found from the graph and the application needs 450 SCFM, choose a valve with a Cv equal to 450/150, or 3.

Liquid Service

Sizing a valve for liquid service is similar to that for gas service, including the required information:

- Upstream pressure (inlet pressure to the valve)
- Pressure differential (or downstream pressure, the outlet pressure of the valve)
- Actual flow through the valve in GPM, or Cv required to yield the desired flow
- The liquid that will be flowing through the valve, and its specific gravity

With these parameters known, refer to chart (3). This chart provides flow (in GPM) for a valve operating on water with a Cv factor of 1.

WATER FLOW CHART FOR VALVE WITH C_V FACTOR = 1

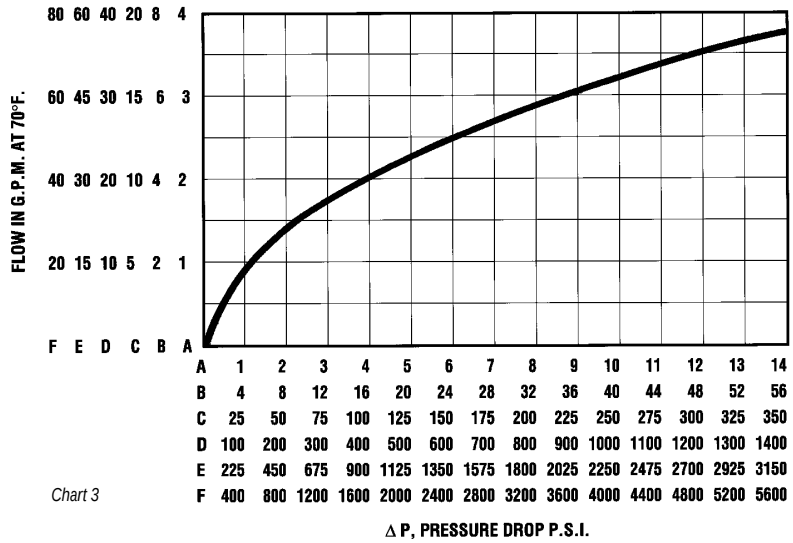

Chart 3

Steps to Determine Flow:

1) Locate the pressure drop through the valve (upstream pressure minus downstream pressure) on one of the bottom scales of the chart. Note the letter of the scale that indicates the pressure drop (A, B, C, D, or E).

2) Read vertically up the chart until it intersects the curve on the chart.

3) Read horizontally from this point until the left scale is reached. This point on the corresponding scale (once again, A, B, C, D, or E) indicates the flow in GPM. The value indicated is the flow of water through a valve with a Cv of 1.

4a) To determine the flow of a different liquid, use the correction factors listed below, (Water Flow x Correction Factor = Fluid Flow). If the correction factor is not known it can be calculated by using the specific gravity of the fluid in the following equation:

Correction Factor = the square root of (1/specific gravity)

Alcohol	1.123
Benzene	1.052
Gasoline	1.204
Kerosene	1.111
Hydraulic Oil	1.087

4b) For selection of a valve with a different flow, simply divide the desired flow rate by the flow rate calculated from the graph to determine the correct Cv. For example, if a water flow of 150 GPM was found from the graph and the application needs 450 GPM, choose a valve with a Cv equal to 450/150 or 3.

Fluid Compatibility Chart

The fluid compatibility chart here and on the next page is presented merely as a guide. Skinner Valve has compiled this chart from available information obtained from laboratory tests. Actual valve applications may be more severe than the laboratory conditions, so the information presented here should be used as a guideline in choosing materials that are compatible with the fluid to be controlled and the ambient conditions of the installation. This information should by no means be used alone in determining the proper materials of construction of a valve. In order to ensure that the best valve is chosen for a particular application, Form PAC 011-89 application data sheet should be completed and submitted to Skinner for correct determination of the optimum valve.

FLUID COMPATIBILITY

Fluids	Metals							Elastomers and Plastics+										
					Stainless Steel													
	Aluminum	Brass	Copper	Silver	18-8, 302, 303, 304, 305	316	430F	EPDM	FKM	NBR	Nylon	PCTFE	PSF Polysulfone	Ruby	PFPM	CR	PTFE	Noryl
Acetic Acid 8%	S	NR	NR	S	S	S	S	S	NR	NR	S	S	S	S	S	S	S	S
Acetone	S	S	S	S	S	S	S	S	NR	NR	S	S	NR	S	S	NR	S	NR
Acetylene, Dry	S	S	NR	S	S	S	S	S	S	S	S	S	NR	U	S	NR	S	U
Air, Lubricated 120°C (248°F)	S	S	S	S	S	S	S	NR	S	NR	NR	S	NR	S	S	NR	S	S
Air, Lubricated 82°C (180°F)	S	S	S	S	S	S	S	NR	S	S	S	S	S	S	S	NR	S	S
Air, Unlubricated 120°C (248°F)	S	S	S	S	S	S	S	NR	S	NR	NR	S	NR	S	S	NR	S	S
Air, Unlubricated 82°C (180°F)	S	S	S	S	S	S	S	S	S	S	S	S	S	S	S	S	S	S
Alcohol, Ethyl (Ethanol)	T	F	F	S	S	S	S	S	S	NR	S	S	U	S	S	S	S	F
Alcohol, Methyl (Methanol)	T	F	F	S	S	S	NR	NR	NR	S	S	S	U	S	S	S	S	F
Ammonia Gas, Anhydrous 20	NR	NR	F	S	S	S	S	S	NR	S	S	S	S	S	S	S	S	S
Argon	S	S	S	S	S	S	S	U	S	S	U	S	U	U	S	S	S	U
Beer	S	U	F	S	S	S	S	U	S	S	U	S	U	S	U	U	S	S
Benzene	S	S	S	S	S	S	S	NR	S	NR	S	S	NR	S	S	NR	S	NR
Boric Acid	NR	NR	F	S	S	S	S	NR	S	NR	S	S	T	S	S	S	S	S
Citric Acid 10%	NR	NR	NR	S	S	S	S	S	S	S	S	S	T	S	S	S	S	S
Cod Liver Oil	S	S	U	S	S	S	S	S	S	S	S	S	S	S	U	NR	S	U
Coffee	S	S	U	S	S	S	S	S	S	S	S	S	S	S	U	S	S	U
Diesel Fuel	S	S	S	S	S	S	S	NR	S	T	S	S	S	S	S	NR	S	NR
Ethylene Glycol (Antifreeze)	S	S	S	S	S	S	S	S	S	S	S	S	S	S	S	S	S	S
Freon 12	S	S	S	S	S	S	S	NR	U	S	S	S	S	S	NR	S	S	NR
Freon 22	S	S	S	S	S	S	S	U	NR	NR	S	S	S	S	S	S	S	NR
Fuel Oil	S	S	F	S	S	S	S	NR	S	T	S	S	S	S	S	NR	S	S
Gasoline, Leaded	S	S	S	S	S	S	S	NR	S	S	S	S	U	S	S	NR	S	NR
Gasoline, Unleaded	S	S	S	S	S	S	S	NR	S	NR	S	S	U	S	S	NR	S	NR
Helium	S	S	S	S	S	S	S	S	S	S	S	S	S	S	S	S	S	S
Hydraulic Fluids - Fire Resistant Cellulube, Phosphate Ester	S	S	S	S	S	S	S	S	NR	NR	S	S	S	S	U	U	S	U
Pydraul	S	S	S	S	S	S	S	NR	S	NR	S	S	S	S	U	NR	S	U
Skydrol	S	S	S	S	S	S	S	S	NR	NR	S	S	S	S	U	U	S	NR
Petroleum	S	S	S	S	S	S	S	NR	S	S	S	S	S	S	U	NR	S	NR
Jet Fuel	S	S	S	S	S	S	S	NR	S	T	S	U	U	S	S	NR	S	NR
Kerosene	S	S	S	S	S	S	S	NR	S	S	S	S	S	S	S	NR	S	NR
Ketones	T	T	U	U	T	S	T	S	NR	NR	S	T	NR	U	S	NR	S	NR
Lard (Animal Fat)	S	S	T	S	S	S	S	F	S	S	S	U	U	U	S	NR	S	U
Lead Acetate	NR	NR	NR	F	NR	NR	NR	S	T	NR	S	S	U	U	S	NR	S	F
Linseed Oil	T	NR	NR	S	S	S	S	NR	S	S	S	U	S	U	S	NR	S	S
Lime & Water	NR	NR	NR	U	NR	NR	NR	S	S	S	S	S	U	U	S	S	S	U
Lubricating Oil	S	S	S	S	S	S	S	NR	S	S	S	S	S	S	S	NR	S	T
Methane	S	S	S	S	S	S	S	NR	S	S	S	S	S	S	S	NR	S	U
Methanol Alcohol-Methyl	S	S	NR	U	S	S	NR	S	NR	S	NR	S	S	S	S	T	S	T
Methyl Ethyl Ketone (MEK)	S	S	S	S	F	S	F	S	NR	NR	S	S	S	S	S	NR	S	NR
Mineral Spirits	S	S	S	S	S	S	S	NR	S	S	U	U	U	U	NR	NR	S	T
Motor Oil	S	S	S	S	S	S	S	NR	S	S	T	S	U	U	NR	T	S	S
Naphtha	S	S	S	S	S	S	S	NR	S	S	S	S	S	S	S	NR	S	NR
Natural Gas	S	S	S	S	S	S	S	NR	S	S	T	U	U	U	S	S	S	U
Nickle Nitrate	NR	NR	NR	U	T	NR	NR	S	S	T	S	U	U	U	S	T	S	S

Fluids	Metals							Elastomers and Plastics+										
					Stainless Steel													
	Aluminum	Brass	Copper	Silver	18-8, 302, 303, 304, 305	316	430F	EPDM	FKM	NBR	Nylon	PCTFE	PSF Polysulfone	Ruby	PFPM	CR	PTFE	Noryl
Nitrobenzene	T	NR	T	U	NR	S	NR	T	NR	NR	NR	T	U	U	S	NR	S	NR
Nitrogen	S	S	S	S	S	S	S	S	S	S	S	S	S	S	S	S	S	S
Nitrous Oxide	NR	NR	S	U	T	T	T	T	T	S	NR	S	U	U	S	T	S	U
n-Octyl Alcohol	U	U	U	U	U	U	U	S	T	T	U	U	U	U	S	T	S	U
Olive Oil	S	S	U	U	S	S	NR	NR	S	S	T	U	U	U	S	NR	S	S
Oxygen	S	S	S	S	S	S	S	S	S	NR	NR	S	NR	U	S	S	S	S
Ozone	T	U	U	U	T	S	T	T	T	NR	NR	S	U	U	S	NR	S	U
Perchloroethylene	S	F	F	S	F	S	F	NR	S	NR	S	S	NR	U	NR	NR	S	NR
n-Propyl Acetone	U	U	U	U	U	U	U	S	NR	NR	U	U	U	U	S	NR	S	U
Propyl Alcohol	S	S	NR	U	S	T	S	T	S	T	NR	U	U	U	S	T	S	U
Pyridine	NR	NR	NR	U	S	S	NR	NR	NR	NR	NR	S	U	U	S	NR	S	T
Pyrolube	U	U	U	U	U	U	U	NR	S	NR	U	U	U	U	U	NR	U	U
Quick Silver	U	U	U	U	U	U	U	S	S	S	T	U	U	U	U	S	S	U
Red Oil	U	U	U	U	U	U	U	NR	T	S	T	U	U	U	S	NR	S	U
Rust Inhibitors	U	U	U	U	U	U	U	U	S	S	U	U	U	U	U	NR	U	U
Shellac	S	S	S	U	S	S	S	S	S	S	S	U	U	U	S	NR	S	U
Silicone Oil	S	S	S	S	S	S	S	S	S	S	S	S	S	S	U	S	S	S
Sodium Phosphates	NR	T	S	S	T	T	NR	T	T	S	NR	S	U	U	S	T	S	S
Steam 148°C (298°F)	U	S	S	S	S	S	S	S	NR	NR	NR	S	NR	U	U	NR	S	S
Steam 180°C (356°F)	NR	S	S	S	S	S	S	NR	NR	NR	NR	NR	NR	U	U	NR	S	T
Stoddard Solvent	S	S	S	U	S	S	S	NR	S	S	T	S	U	U	S	NR	S	NR
Sucrose Solution	U	U	NR	U	S	S	S	S	S	S	T	U	U	U	S	T	S	S
Sulfur	S	NR	NR	U	T	T	T	S	S	NR	T	S	U	U	S	U	S	S
Sulfur Hexaflouride	S	S	S	S	S	S	S	S	NR	NR	T	U	U	U	T	S	S	U
Toluene	S	S	S	S	S	S	S	NR	S	NR	S	S	NR	U	S	NR	S	NR
Trichloroethylene	T	NR	T	U	T	T	T	NR	T	NR	NR	NR	U	S	S	NR	S	NR
Trimethylpentane	U	U	U	U	U	U	U	NR	S	S	T	U	U	U	S	NR	S	U
Trisodium Phosphate	NR	NR	NR	F	T	T	T	S	S	F	T	S	U	U	S	F	S	S
Turpentine	S	S	S	S	S	S	S	NR	F	S	S	S	U	U	S	NR	S	S
Urea	T	U	U	S	S	F	U	T	T	T	T	U	U	U	U	T	S	S
Varnish	S	T	S	U	S	S	S	NR	S	T	T	S	U	U	S	NR	S	U
Vegetable Oil	S	S	S	U	S	S	S	NR	S	S	S	S	U	U	U	NR	S	U
Vinegar	T	NR	NR	S	T	S	T	T	NR	T	NR	S	U	U	U	T	S	S
Water, Boiler Feed	S	T	T	S	S	S	S	U	T	S	T	S	U	S	S	NR	S	U
Water, Deionized, Distilled	S	T	T	S	S	S	S/T	S	S	T	S	S	S	S	S	NR	S	S
Water, Fresh <82°C (180°F)	S	S	S	S	S	S	S	S	S	S	S	S	S	S	S	NR	S	S
Water, Fresh <100°C (212°F)	T	S	S	S	S	S	S	S	S	NR	S	S	S	S	S	NR	S	S
Water, Return Condensate	S	T	T	S	S	S	S	S	T	S	T	S	U	S	S	NR	S	U
Water, Sea/Salt	NR	NR	F	S	T	S	NR	S	S	S	S	S	S	S	S	NR	S	S
Whiskey	NR	T	NR	U	S	S	NR	S	S	S	S	S	U	U	S	S	S	S
Wine	NR	NR	NR	U	S	S	T	S	S	S	S	S	U	U	S	S	S	S
Xylene	S	S	S	S	S	S	S	NR	S	NR	S	S	NR	S	S	NR	S	NR
Zinc Chloride	NR	NR	NR	F	NR	NR	NR	S	S	S	T	S	U	U	S	S	S	S
Zinc Sulfate	NR	NR	NR	S	T	T	NR	S	S	T	U	T	U	U	S	T	S	S

NOTE: Please read the introduction section before using this chart. The following data should be used as a guide, and not as a final recommendation. When flammable gas applications are being considered, consult Skinner Valve at (860) 827-2300.

S=Satisfactory; T=Test to Verify; F=Fair; U=No Data Available, Unknown Compatibility; NR=Not Recommended Unless Otherwise Stated, Media are at 100% concentration and at Room Temperature.

SEAL MATERIAL DESIGNATIONS

ASTM Designation	Commercial Designations and/or Trade Names	Seal Designation
NBR	Buna-N, Nitrile	N
EPDM	Ethylene Propylene	E
FKM	Fluorinated Hydrocarbon, Viton®	V
PCTFE	Kel-F	F
PTFE	Teflon®, Rulon® AR	T
PFPM	Kalrez	K
CR	Neoprene	C

Viton® and Teflon® are Dupont Co. trademarks. Rulon®AR is a Furon-Advanced Polymers Division trademark..

Unit Conversion Charts

Fractional Conversions		
mm	inches	decimal inches
0.79	1/32	0.031
1.59	1/16	0.063
2.38	3/32	0.094
3.18	1/8	0.125
3.97	5/32	0.156
4.76	3/16	0.188
5.56	7/32	0.219
6.35	1/4	.0250
7.14	9/32	0.281
7.94	5/16	0.313
8.73	11/32	0.344
9.53	3/8	0.375
10.3	13/32	0.406
11.1	7/16	0.438
11.9	15/32	0.469
12.7	1/2	0.500
13.5	17/32	0.531
14.3	9/16	0.563
15.1	19/32	0.594
15.9	5/8	0.625
16.7	21/32	0.656
17.5	11/16	0.688
18.3	23/32	0.719
19.1	3/4	0.750
19.8	25/32	0.781
20.6	13/16	0.813
21.4	27/32	0.844
22.2	7/8	0.875
23.0	29/32	0.906
23.8	15/16	0.938
24.6	31/32	0.969
25.4	1	1.000

Measures

1 inch = 25.4mm
1 inch = 2.54cm
1 U.S. gal = 3.785 liters
1 Imperial gallon = 4.546 liters

Pressure

1 psi = 0.0703 Kg/square cm
1 psi = 27.73 inches water (@60/F)
1 psi = 2.036 inches of mercury (@32/F)
1 psi = 51.7 mm of mercury (@32/F)
1 psi = 0.0689 bar

Vacuum

1 torr = 1 mm mercury
1 micron = 0.001 torr

Volumetric Flow Rate

1 Cv = 14.28 Kv
1 gpm = 3.785 liters/min (U.S. gallon)
1 cfm = 28.317 liters/min
1 liter/min = 0.0353 cfm

Temperature

Degrees C = (Degrees F-32) (5/9)
Degrees F = (Degrees C) (9/5) + 32

Torque

1 in lb. = 0.113 Nm
1 in lb. = 1.15 cm Kg

7000 SERIES TECHNICAL INFORMATION

The Skinner 7000 Series Numbering System

The Skinner 7000 Series numbering system was designed with our customers in mind. It is a significant numbering system that allows every user an easy method to select, identify and understand the product being purchased. In its significance, this numbering system provides a complete description of every valve, and makes specification, cross referencing, and substitution work a simple task.

Provided below is a complete set of numbering system codes. The codes apply to three major valve components: the pressure vessel, enclosure and coil.

A complete valve number, including all available options will always be 20 digits in length.

7000 Series Numbering System – Digit Assignments

- Pressure Vessel 1-12
- Enclosure 13-14
- Coil and Voltage 15-20

A COMPLETE VALVE ASSEMBLY EXAMPLE

Pressure Vessel	Enclosure	Coil	Voltage Code
71215SN1VN00	N0	C111	P3

DESCRIPTION OF SIGNIFICANT DIGITS

Digit	Title of Code	Description of Code
1	7	7000 Series designation
2	Actuation	Type of operator design used to open/close the valve
3	Functional Type	Conventional description of flow capabilities (number of ways)
4	Flow Pattern	De-energized flow position/condition, e.g. normally closed
5	Family	A Honeywell designation associated with body geometry
6	Body Material	Material from which the body is constructed
7	Process Connection	The type of threading or connection to user media
8	Port Size	Size of the process connection
9	Orifice Size	Size or Cv factor of main fluid passage
10	Seal Material	Material of main orifice seal
11,12	Mechanical Options	Options to the pressure vessel
13	Enclosure	Type of housing surrounding the coil
14	Enclosure Options	Options to the housing and /or label
15	Coil Termination	Type of electrical connection
16	Coil Wattage/Class	Power level and temperature rating of coil
17,18	Electrical Options	Optional coil and/or termination configuration
19,20	Voltage Code	A two digit code denoting voltage and frequency

PRESSURE VESSEL NUMBERING 2-WAY VALVES

For reference only. Consult catalog listings for available combinations.

1	2 Actuation	3 Functional Type	4 Flow Pattern	5 Family*	6 Body Material	7 Threading/ Process Connection	8 Pipe Size (NPT)	9 Orifice Code#	10 Seals/+ Elastomers	11 & 12 Mech. Options
7	1 Direct Acting	2 Two-Way	1 Normally Closed	1	A Aluminum	A SAE	1 1/8”	A	C CR	00 No Option
	2 Direct Lift		2 Normally Open pressure in/out of body	2	B Brass	E Male NPT	2 1/4”	B	E EPDM	A2 Silver Shading Ring
	3 Pilot Operated Internal Pilot Supply		3 Multi/Dual purpose	4	L Noryl	F Flange	3 3/8”	C	F PCTFE	C0 4-Step Variable Closing
	4 Pilot Operated External Pilot Supply		9 Normally Open pressure in the body, pressure out the sleeve	5	R 316 SS	G BSP-Parallel	4 1/2”	D	K PFPM	J1 Exhaust Adaptor Nut
	5 Remote Pressure Operated			6	S 430F SS	R BSP-Taper	5 3/4”	E	L Nylon	M0 Manual Override
	6 Manual/Mech. Operated			8	T Teflon	J Bib Fitting	6 1”	F	M Metal	MC Manual Override w/Var. Closing
				9	V 303 SS	N NPT(Female Nat'l Pipe thread)	7 1 1/4”	G	N NBR	M5 Manual Override w/Exhaust Adaptor
				F		T Barbed Fitting	8 1 1/2”	H	R Ruby	R0 Sleeve Exhaust Metering
				G			9 2”	J	T PTFE	R1 Mainstream Metering
				H				K	U PTFE	R2 Adjustable Bypass
				K				L	V FKM	S0 Steam Service Rated
				V				M		W0 Anti-Water Hammer (fixed)
								N		N0 Cleaned for oxygen service
								P		
								Q		
								R		
								S		
								T		
								U		
								V		
								0 thru 9		

Note: These tables are provided to interpret product specifications. It should not be used ro create a valve number without reference to the catalog listings or consultation with Skinner Valve personnel.

* *The family designator is assigned to organize products by physical similarity.*

\# *Orifice codes relate to a range of Cv factors and sizes. They are listed in ascending order.*

\+ *Reference Seal Material Designations, page 131.*

PRESSURE VESSEL NUMBERING 3- AND 4-WAY VALVES

For reference only. Consult catalog listings for available combinations.

1	2 Actuation	3 Functional Type	4 Flow Pattern	5 Family*	6 Body Material	7 Threading/ Process Connection	8 Pipe Size (NPT)	9 Orifice Code#	10 Seals/+ Elastomers	11 & 12 Mech. Options
7	1 Direct Acting	3 Three-Way	**3-Way Valves**	1	A Aluminum	A SAE	1 1/8”	A	C CR	00 No Option
	2 Direct Lift	4 Four-Way	1 Normally Closed	2	B Brass	E Male NPT	2 1/4”	B	E EPDM	A2 Silver Shading Ring
	3 Pilot Operated Int. Pilot Supply		2 Normally Open pressure in/out of body	3	L Noryl	F Flange	3 3/8”	C	F PCTFE	CA Cylinder ”A” normally open to pressure inlet
	4 Pilot Operated Ext. Pilot Supply		3 Multi/Dual Purpose	4	M Zinc Die Cast	G BSP-Parallel	4 1/2”	D	K PFPM	CB Cylinder “B” normally open to pressure inlet
	5 Remote Pressure operated		8 Diverting	5	R 316 SS	R BSP-Taper	5 3/4”	E	L Nylon	C0 4-Step Variable Closing
	6 Manual/Mech. Operated		9 Normally Open pressure in the sleeve, pressure out the body	6	S 430F SS	J Bib Fitting	6 1”	F	M Metal	J0 Pilot Exhaust Return Pipe
			4-Way Valves	8	T Teflon	N NPT (Female National Pipe Thread)	7 1 1/4”	G	N NBR	J1 Exhaust Adaptor Nut
			1 2-position, single operator	9	V 303 SS	S Subbase Mounted	8 1 1/2”	H	R Ruby	M0 Manual Override
			2 3-position, dual operator center closed	E		T Barbed Fitting	9 2”	J	T PTFE	MC Manual Override w/Var. Closing
			3 3-position, dual operator center open	F				K	U PTFE	MJ Manual Override w/Exhaust Return Pipe
			4 3-position, dual operator center open	G				L	V FKM	MR Manual Override w/Main Stream Metering
			6 2-position, dual operator bi-stable	H				M		M5 Manual Override w/Exhaust Adaptor
			7 2-position, dual operator bi-stable, with latching	K				N		R0 Sleeve Exhaust Metering
				L				P		R1 Mainstream Metering
				T				Q		R2 Adjustable Bypass
				V				R		S0 Steam Service Rated
								S		W0 Anti-Water Hammer (fixed)
								T		N0 Cleaned for oxygen service
								U		
								V		
								0 thru 9		

ENCLOSURE, COIL AND VOLTAGE NUMBERING 2-, 3- AND 4-WAY VALVES

13 & 14 Enclosure Type		15 & 16 Coil Construction and Type		17 & 18 Terminations and Option Codes		19 & 20 Voltage	
A0	7/8" Knockout		**Integrated Coils**	00	Standard DIN, Screw, Tab Coils (no leads)	B2	24/60
B0	1/2" Conduit	C1	1/2" NPT Conduit, 10 Watt Class F, NEMA 4X	11	Class F Coils with 18" leads	C1	12VDC
F0	Yoke	C2	1/2" NPT Conduit, 10 Watt Class H, NEMA 4X	22	Class H Coils with 18" leads	C2	24VDC
G0	Water Tight	C3	1/2" NPT Conduit, 22 Watt Class H, NEMA 4X	GL	C1,C2,C3 & H1,H2, H3 Coils with Ground lead	C4	48VDC
J0	Junction Box	D1	DIN, 10 Watt Class F	D1	All DIN Coils with Cable Gland Connector	C6	120VDC
M1	Magnelatch 1/2" Conduit	D2	DIN, 10 Watt Class H	D2	All DIN Coils with 1/2" Conduit Connector	P0*	24,50/60
M2	Magnelatch Grommet	D3	DIN, 22 Watt Class H	D4	D1,D2,D4 coils for timer assembly with fixed-off and adjustable on-time	P3	110/50-120/60
N0	Nut and Washer	H1	1/2" NPT Conduit, 10 Watt Class F, NEMA 7, 9	DB	All DIN Coils with Terminal Box	Q3	220/50-240/60
		H2	1/2" NPT Conduit, 10 Watt Class H, NEMA 7, 9	TB	S1,S2,S3 Coils with Terminal Box	Q8	440/50-480/6
		H3	1/2" NPT Conduit, 22 Watt Class H, NEMA 7, 9	S1	Hazardous stainless steel yoke with 18" leads and ground lead	2K	208/60
		L1	18" leads, 10 Watt Class F			2W*	110-120,50/60
		L2	18" leads, 10 Watt Class H			3W*	220-240,50/60
		L3	18" leads, 22 Watt Class H				
		S1	Screw Terminal, 10 Watt Class F				
		S2	Screw Terminal, 10 Watt Class H				
		S3	Screw Terminal, 22 Watt Class H				
		T1	1/4" Tab Terminal, 10 Watt Class F				
			Conventional Coils				
		J1	18" leads, 10 Watt Class F				
		J2	18" leads, 10 Watt Class H				
		J3	18" leads, 22 Watt Class H				
			Specialty Coils				
		F6	Fluxtron 4-wire, 1 Watt molded				
		J6	Fluxtron 2-wire, 1 Watt molded				
		J0	Magnelatch 2-wire DC only				
		G0	Magnelatch 3-wire AC/DC (DC pulse)				

\+ *See Note on page 133.*
* *Fluxtron only*

ELECTRICAL ENCLOSURE OPTIONS

A coil enclosure is needed to complete the magnetic flux path of conventional molded coils and specialty coils. The enclosure can also serve to protect the coil and provide a means to accommodate the electrical connection. This section describes the most common electrical enclosure options available.

7000 Series Enclosure Options

7000 Series integrated coils incorporate these features into a one-piece assembly which requires only a nut and washer (enclosure code N0) to fasten to the pressure vessel. The 7000 Series conventional enclosure selection is provided to complement the integrated coil offering providing flexibility in product type and installation.

Coil Picture	Enclosure Code	Description	Applicable Coils
	A0	Standard Connection, 7/8" exit to accommodate strain relief, adapter or fittings for lead wires, NEMA Type 2	J111, J222, J322, F611, J611
	B0	1/2" Conduit Connection for attachment of conduit, 1/2" NPT fittings or BX cable, NEMA Type 2	F611, J611
	F0	Yoke for use where open enclosure is suitable	F611, J611
	G0	Watertight, 1/2" conduit hub accommodating 1/2" NPT fittings or BX cable, NEMA Type 4X	F611, J611
	J0	Splice box, 7/8" exit allowing for internal splice, NEMA Type 2	J111, J222, J322, F611, J611
	M1	Magnelatch, 1/2" conduit hub for attachment of conduit, 1/2" NPT fittings or BX cable, NEMA Type 2	G011, J011
	M2	Magnelatch, leaded with grommet connection, NEMA Type 2	G011, J011
	N0	Nut and Washer	All Integrated Coils

7000 Series Electrical Options

Various electrical options are available with 7000 Series integrated coils. To order a coil with an option, write the electrical option code in place of the last two digits of the coil code. The electrical options (with exception of the ground lead) are also available for sales as individual pieces (accessories). For an accessory, simply order the code.

Coil Option Picture	Coil Option Code	Description	Coil Types	Coil Codes
	GL	Ground Lead 18”	Conduit Terminated	C1GL, C2GL, C3GL H1GL, H2GL, H3GL
	D1*	Cable Gland DIN Plug	DIN	D1D1, D2D1, D3D1
	D2*	1/2” Conduit DIN Plug	DIN	D1D2, D2D2, D3D2
	D4#	Timer, 12-48VDC 24-120, 50/60 Hz	DIN, AC & DC	D1D4, D2D4, D3D4
	DB^	Terminal Box	DIN	D1DB, D2DB, D3DB
	TB^	Terminal Box	Screw Terminal	S1TB, S2TB, S3TB

* *The plug comes complete with gasket to meets NEMA specification Type 4*

\# *The timer has a fixed “off” time of 12 minutes and an adjustable “on” time which ranges from 1 second to 2 minutes. The timer complete with 24” 3-wire cable. Also available on Timer Drain Valves 7321KBY61640, 7321KBY63200, and 7321KBY6320A on page 25.*

^ *Meets NEMA 4, 4X when connected to a Screw Terminal or DIN Coil, as applicable. It is provided with a 1/2” NPT conduit thread and ground screw.*

7000 Series Mechanical Options

Solenoid valves at times requires a variety of different mechanical options to meet the specific needs of a given application. Many of these options have become common over time, others are specified infrequently.

Skinner has the ability to produce wide varieties and combinations of mechanical options. Listed are only a few of the common options we provide. If the option (or set of options) you need is not listed, please contact a company representative for assistance.

Available options are denoted by the valve family to which they pertain. The 7000 Series family designator is position 5 of the pressure vessel number. Codes that are suffixed by an asterisk (*) are already covered in the product listing in the catalog. To order the other listed mechanical options:

1) Select the base pressure vessel number. It must have “00” in the last two digits.

2) Confirm compatibility of the option with the Mechanical Options Table.

3) Write the mechanical option code in place of the last two digits of the pressure vessel number. For example, a 71215SN1MN00 with a manual override (M0) becomes 71215SN1MNM0.

Code	Mechanical Options Descriptions	7000 Series Valve Families (pressure vessel 5th digit)												
		1	2	3	4	5	6	8	9	E	F	G	K	T
A2	Silver Shading Ring		X	X		x	x	x						
C0*	Anti-Water Hammer, 4 step adjustment											x		
J0	Pilot Exhaust Return Pipe		x											
J1	Exhaust Adapter Nut		x	x		x			x	x	x		x	
M0#	Manual Override		x			x								x
M5	M0 w/ Exhaust Adapter Nut					x			x					
MC*	Manual Override w/ Anti-Water Hammer, 4 step Adjustment											x		
MJ	M0 w/ Pilot Exhaust Return Pipe		x											
R0	Exhaust Metering			x		x								
R1**	Main Stream Metering			x		x								
R2**	Adjustable Bypass					x								
S0*	Steam Service Rated							x				x	x	
W0*	Anti-Water Hammer, Fixed												x	

Note: Not all options designated in this table are applicable to every valve within the valve family. Some exceptions are noted below. For details on specific valve option compatibility, consult the factory.

\# *Not available on the following valve series: 71225, 71295, 7122K, 72218, 72228, 7221G, 7322G, and 73222. Not available on 3/8” NPT or 1/2” NPT “5” and “K” family valves.*

***Not available on 3/8” NPT valves.*

Agency Approval Note: Valves listed as Safety Shutoff Valves (SS in catalog listings) are not permitted with Manual Override and/or Bypass Options (M0, MC, M5, R1, R2 above). Valves with these options are considered General Purpose Valves.

Agency Approvals

Most Skinner solenoid valves are approved by Underwriter's Laboratories (UL) and certified by the Canadian Standards Association (CSA). The table below summaries the specific approvals obtained, which are dependent upon the combination of approved pressure vessels, coils and enclosures for both ordinary and hazardous locations.

Agency Approved Solenoid Valve Combinations

Enclosure Code	Coil* Type/Option	Metallic Bodied Pressure Vessels (Aluminum, Brass, Stainless Steel, Zinc)			Plastic Bodied Pressure Vessels** (Noryl, Teflon)
		NPT ported	BSPported	FLG mounted	All Porting Types
N0	C111, C222, C322	ULListed			
N0	C1GL, C2GL, C3GL				
N0	D1DB, D2DB, D3DB				
A0,B0,G0,J0	F611, J611				
A0,J0	J111, J222, J322				
N0	H111, H222, H322				
N0	H1GL, H2GL, H3GL				
N0	S1TB, S2TB, S3TB				
N0	D100, D1D1, D1D2	ULComponent Recognized			
N0	D200, D2D1, D2D2				
N0	D300, D3D1, D3D2				
F0	F611, J611				
N0	L111, L222, L322				
N0	S100, S200, S300				
N0	T100				

UL approved valves are also CSA certified. NOTE: Agency approval is contingent upon factory assembly of solenoid valves.

** Coil voltage must also be approved. See pages 12 and 13.*
***Pressure vessels must be approved as Safety Shutoff (SS) or General Purpose (GP) valves. See catalog sections.*

Types of Protection of Solenoids for Hazardous Environments

Standards are established by the European Committee for Electro-Technical Standards (CENELEC). Degrees of Protection of electrical parts and operating temperatures are defined by various European standards.

The following charts show the Degree of Protection for the selected coils along with the maximum surface temperatures for each temperature code classification.

Protection Class	Degree of Protection
IP-65	Protection against ingress of dust (dust proof) Protection against contact with internal parts Protection against a water jet from a nozzle from all directions
IP-67	Protection against ingress of dust (dust proof) Protection against contact with internal parts Protection against water when the equipment is immersed in water under specific pressure and time conditions

Temperature Classification	Maximum Allowable Surface Temperature	
	°C	°F
T1	450	842
T2	300	572
T3	200	392
T4	135	257
T5	100	212
T6	85	185

Response Time

The response time of a solenoid valve depends on many factors such as voltage, frequency, pressure, media, temperature (including coil) and the type of valve. Variations in these factors can have a significant effect on the response time. The following tabulation lists the approximate response times for several different types of valves. The times given are for the valves to go from closed position to open or from open position to closed.

Valve Type	Response Time (milliseconds)
Direct Acting Valves	4-15
Small Pilot Operated Piston Valves	30-90
Large Pilot Operated Piston Valves	100-150
Small Pilot Operated Diaphragm Valves	30-60
Large Pilot Operated Diaphragm Valves	60-160
Direct Lift Diaphragm Valves	30-60

Operating Speed (Cycle Rates)

Operating speed is defined as the maximum number of cycles (On/Off) per minute that a solenoid valve is capable of completing. It is dependent upon the response time characteristics of the valve. Many of our small, short stroke, direct acting valves are capable of operating at rates over 2,000 cycles per minute. However, for normal operation lower cycle rates as shown are usually recommended.

Valve Type	Up To (cycles/min)
Direct Acting Valves	600
Small Pilot Operated Piston Valves	400
Large Pilot Operated Piston Valves	150
Small Pilot Operated Diaphragm Valves	300
Large Pilot Operated Diaphragm Valves	200
Direct Lift Diaphragm Valves	200

Vacuum

While many of our solenoid valves with elastomeric seals listed in this catalog can be used on vacuum, the standard 100% production leakage test does not ascertain that the valves are sufficiently tight for severe vacuum applications. We do, however, design, produce, and test many vacuum valves to meet specific customer requirements. Therefore, we invite you to consult us for your vacuum valve applications.

Fluid Temperature Limitations

32°F Minimum Fluid Temperature if moisture is present. Otherwise minus 40°F for direct acting valves with NBR seals, minus 10°F with FKM seals (minus 10°F for "4" family valves). For exceptions, consult Skinner.

7000 Series Coils

To determine the approximate Holding or Inrush Current for AC voltages including 24/60, 120/60, 240/60 and 480/60 volts in amperes, divide the voltage into the VA rating indicated in the AC Power Consumption tables. DC valves have no inrush current. The current rating in amperes for DC valves are shown in the DC Table. Figures are based on nominal values and will vary slightly depending on operating voltage and coil tolerances.

Current (Amperes)

7000 Series DC Current Consumption Ratings			
Coil Type		12 Volt	24 Volt
10 Watt	Integrated	0.81	0.41
	Conventional	0.81	0.41
22 Watt	Integrated	1.64	0.83
	Conventional	1.64	0.83

Valve Type	7000 Series AC Power Consumption Ratings							
	10 watt Integrated Coils		10 watt Conventional Coils		22 watt Integrated Coils		22 watt Conventional Coils	
	VA Holding	VA Inrush	VA Holding	VA Inrush	VA Holding	VA Inrush	VA Holding	VA Inrush
71211, 71311, 71321, 71331, 71381	16	32	13	30	-	-	-	-
71214	16	29	14	27	-	-	-	-
71215 (3/64"-1/8" orifice)	16	31	14	28	35	54	35	54
71215 (5/32"-5/16" orifice)	17	35	14	33	34	61	34	61
71215 (3/8" orifice)	16	36	14	34	34	63	34	63
71216	17	32	15	31	-	-	-	-
7121F	18	32	16	30	35	56	35	56
7121K (EPDM seals)	19	36	18	34	-	-	-	-
7121K (NBR, FKM seals,1/16"-1/8" orifice)	18	32	16	30	35	56	35	56
7121K (NBR, FKM seals,5/32"-1/4" orifice)	18	36	16	34	-	-	-	-
7121K (NBR, FKM seals,7/16" orifice)	18	37	16	35	35	65	35	65
7121V	19	36	19	36	39	66	39	66
71221	16	32	13	30	-	-	-	-
71225	20	32	18	30	-	-	-	-
7122K	20	32	17	30	-	-	-	-
71235, 71313, 71335, 71385, 71395, 73312	17	27	16	26	-	-	-	-
71295, 71315 (0.19"-0.25" orifice)	16	30	15	29	-	-	-	-
72218	17	41	15	38	-	-	-	-
7221G (NBR, FKM seals)	17	41	16	39	-	-	-	-
7221G (EPDM seals)	19	41	18	39	-	-	-	-
72228	20	46	18	43	47	80	47	80
73212 (1/4" orifice)	16	31	14	28	35	54	35	54
73212 (1/2"-1" orifice), 71315 (0.05"-0.11" orifice)	17	27	16	26	-	-	-	-
73216	17	32	15	31	-	-	-	-
73218	16	31	14	28	35	54	35	54
7321G, 7321H	18	32	16	30	35	56	35	56
7321K (EPDM seals)	19	41	18	39	-	-	-	-
7321K (NBR, FKM seals)	17	39	15	36	-	-	-	-
73222, 73228	20	32	18	30	-	-	-	-
7322G, 7322H	20	32	17	30	-	-	-	-
74232, 73322, 73382, 73419, 74332	17	27	16	26	-	-	-	-
7131E, 7131F, 7131K, 7133F, 7133K, 7341L,	17	31	15	29	-	-	-	-
7131T, 7132T, 7133T	17	35	16	33	-	-	-	-

7000 SERIES ACCESSORIES

Mounting Brackets

Body mounting options are available on specific valve families. A listing is provided below:

MECHB2:

For 2-way "2" family valves with 3/8-inch or 1/2-inch NPT connections. 2-way valves only.

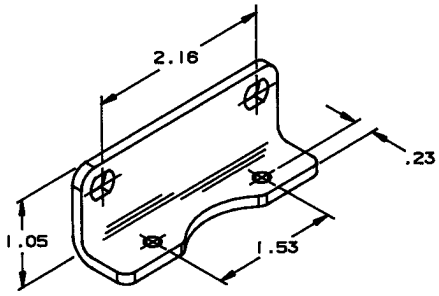

MECHB5:

For the "4", "5"(except 3/8" NPT) and direct operated "6" family valves(i.e. 71216), this bracket allows two different body mounting configurations.

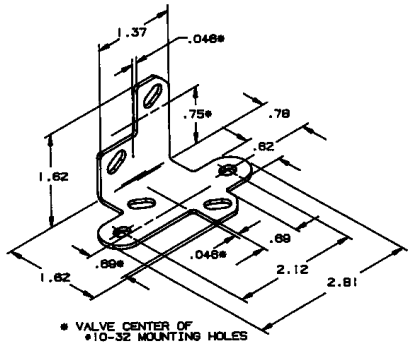

MECHB8:

For the "8" family, this bracket provides a flexible side mounting alternative.

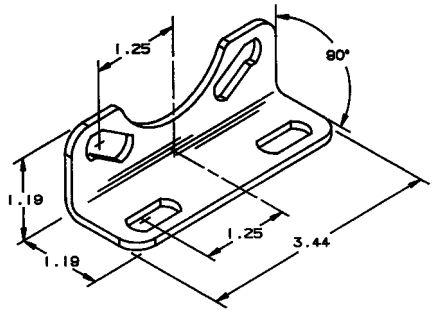

7000 Series Solenoid Valve Seal Materials

7000 Series solenoid valves are constructed with the finest elastomeric and plastic seal materials available to ensure dependable bubbletight operation and long life. Most of the valves in the catalog utilize a single seal material whether a plunger seal or a flange seal. However, many valve designs require a variety of different sealing materials.

The 7000 Series numbering system delineates the tenth digit for description of the main orifice seal—the seal that actually prevents flow through the valve. For direct acting valves this represents the plunger seal and for pilot operated valves this represents the diaphragm. Since every seat material cannot be specified in the significant valve number, the following table can be used to determine the additional seat materials used.

Example: Valve No. 71215SN1EF00

Tenth digit F = Kel F seal material. Since this is a direct acting valve, the plunger seal is PCTFE. From the table at left, we see that when a plunger seal is PCTFE, the flange seal is FKM. (this valve has no diaphragm)

Example: Valve No. 73218BN3TE00

Tenth digit E = EPDM seal material. Since this is a pilot operated valve, the diaphragm is EPDM. From the table above, we see that when the diaphragm is EPDM, the plunger and flange seal is EPDM.

Standard Seal Material Combinations

Flange Seal	Diaphragm Seal	Piston Seal
NBR	NBR	NBR
FKM	FKM	FKM
Ruby	FKM	FKM
PCTFE	FKM	FKM
PFPM	PTFE	PTFE
EPDM	EPDM	EPDM
PTFE	PTFE	PTFE
CR	CR	CR

Note: See Seal Material Designation Chart page 131.

Non-Standard Seal Material Combinations

There are some exceptions to the above standard. The following valve types do not conform to the table of standard seal material combinations and are therefore specified in this table. Non-metallic orifice materials are specified where applicable.

2-Way Valves

Catalog Number	Orifice (if non-metallic)	Plunger Seal	Flange Seal	Diaphragm Seal	Piston Seal	Other Seal
71216SN1BL00 71216SN2BL00 71216SN1GL00 71216SN2GL00	Nylon	-	NBR	-	-	-
71216SN1FU00 71216SN2FU00	Rulon	-	NBR	-	-	-
71216SN1JT00 71216SN2JT00	PTFE	-	NBR	-	-	-
72228BN3TES0 72228BN4UES0 72228BN5VES0	-	FKM	EPDM	EPDM	-	EPDM, FKM
73216BN2MT00	Nylon	-	NBR	-	PTFE	NBR
73216SN2MT00	Polysulfone	-	NBR	-	PTFE	NBR
73222BN2MN00 73222SN2MN00	-	FKM	NBR	-	NBR	NBR

NOTE: There may exist especially exacting application requirements which would necessitate a more detailed description of the various components and materials employed in the construction of Skinner solenoid valves. In such cases, contact the factory so that we may provide you with more detailed information.

Seal Material Designations

ASTM Designation	Commercial Designations and/or Trade Names	7000 Series Seal Designation
NBR	Buna-N, Nitrile	N
EPDM	Ethylene Propylene	E
FKM	Fluorinated Hydrocarbon, Viton®	V
PCTFE	Kel-F	F
PTFE	Teflon®, Rulon®AR	T
PFPM	Kalrez	K
CR	Neoprene	C

Viton® and Teflon® are Dupont Co. trademarks.
Rulon®AR is a Furon—Advanced Polymers Division trademark

3- and 4-Way Valves

Catalog Number	Orifice (if non-metallic)	Plunger Seal	Flange Seal	Diaphragm Seal	Piston Seal	Other Seal
7131EBN2LN00	FKM	-	-	-	NBR	NBR
7131FBF4LV00 7133FBF4LV00	FKM	-	-	-	-	FKM
7341LAN1HN00	FKM	-	-	-	NBR	NBR
7341LMN2NN00	FKM	-	-	-	NBR	NBR

NOTE: There may exist especially exacting application requirements which would necessitate a more detailed description of the various components and materials employed in the construction of Skinner solenoid valves. In such cases, contact the factory so that we may provide you with more detailed information.

Integrated Coils and Terminal Box Dimensions

The valve construction reference drawings provide outline dimensions for all pressure vessels contained in this catalog. They are shown with the 1/2" conduit style integrated coil as standard. The individual coil drawings on this page provide dimensions for the other 7000 Series integrated coils. To apply these coil dimensions to any of the standard valve construction references, a datum line (cL) has been included which corresponds to the conduit hub centerline dimension of the 1/2" conduit style integrated coil.

DRAWINGS

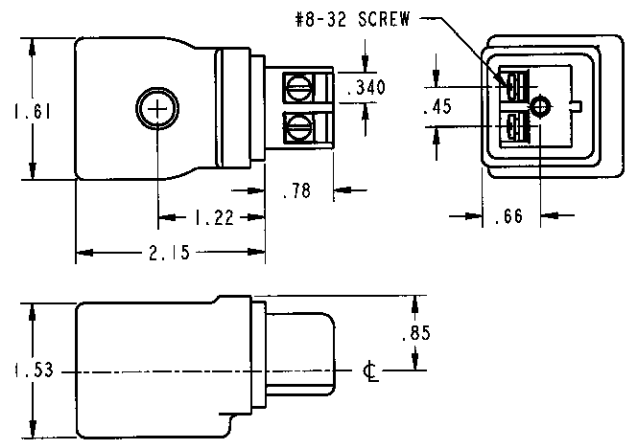

S100, S200, S300-Screw Terminations

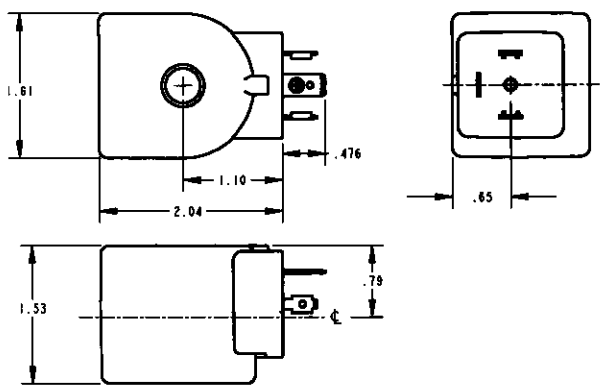

D100, D200, D300-DIN Terminations (DIN 43650 and ISO 4400)

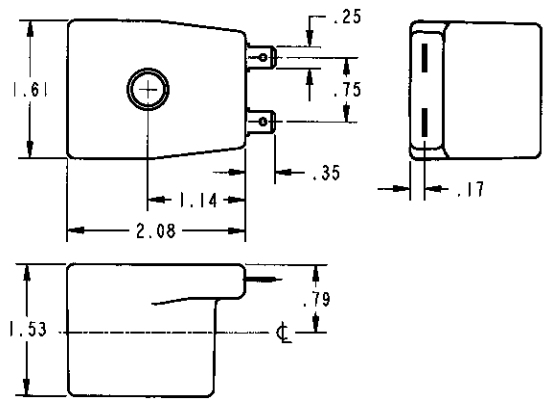

T100-Tab Terminations

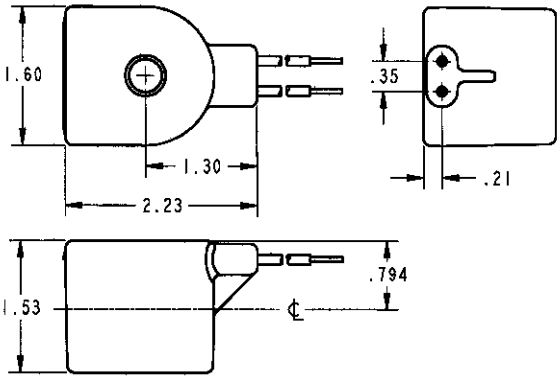

L111, L222-Leaded Terminations

Option DB, TB-Terminal Box

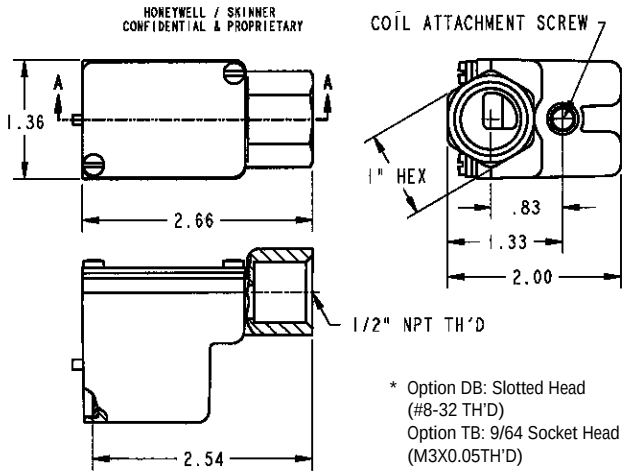

* Option DB: Slotted Head (#8-32 TH'D)
Option TB: 9/64 Socket Head (M3X0.05TH'D)

All dimensions in inches.

3000 Series Numbering System Designators

Pressure	1	Series Designation	3	3000 Series
Vessel	2	Operations	1	Direct Acting, 6 Watt
			9	Direct Acting, 3 Watt
	3	Ways	2	Two-Way
		(Functional Type)	3	Three-Way
	4	Flow Pattern	1	Normally Closed
			3	Multipurpose
			8	Directional
			9	Normally Open, Ported Sleeve
	5	Family	B	B
	6	Body Material	B	Brass
			J	Operator (No Body)
			S	303 Stainless Steel
	7	Process Connection	A	Male Straight Thread
			N	Female National Pipe Thread
			R	BSP Taper
	8	Pipe Size	1	1/8”
			6	5/16-24 UNF
			7	3/4-32 UNF
	9	Orifice	A	1/32”
			E	3/64”
			G	1/16”
			J	5/64”
			L	3/32”
			N	1/8”
			Q	5/32”
	10	Seal Material	C	CR
			E	EPDM
			N	NBR
			V	FKM
	11	Mechanical Option	00	None
	12		AD	1/8” NPT Sleeve Adapter
			C#	Aluminum, Female 1/8” NPT, 2, 3, or 4 Station Cavity Manifold Block
			HT	Helium Leak Tested
			N0	Cleaned for Oxygen Service
			R1	Bottom Metering
Housing	13	Housing	BB	1/2” Conduit
	14		N0	No Housing (Integrated Coil)
			RR	Grommet
			YY	Yoke
Coil	15	Coil Designation	M1S1	Integrated Molded, 1/4” Tab, 6W*, Class B
			MC11	Integrated Class F, 1/2” Conduit 18” Leads, 6W, NEMA 4X
			MH11	Integrated Class F, 1/2” Conduit 18” Leads, 6W, NEMA 4X, 7, 9
	16		M3J5	Integrated Molded, 12” Leads, 6W, Class B
	17		M4S1	Integrated Molded, 1/4” Tab, 3W, Class B
	18		M6J5	Integrated Molded, 12” Leads, 3W, Class B
			T1J1	Taped 12” Leads, 6W, Class B
			T3J1	Taped 12” Leads, 3W, Class B
	19	Voltage Code	P0	24/50-60 Hz AC
	20		P3	110/50 Hz, 120/60 Hz AC
			Q3	220/50 Hz, 240/60 Hz AC
			C0	6 VDC
			C1	12 VDC
			C2	24 VDC

* *For all 6 watt Coils, actual wattage for 24/60 Volts is 7.5.*

Electrical Enclosure Options

A coil enclosure is needed to complete the magnetic flux path of conventional molded coils and specialty coils. The enclosure can also serve to protect the coil and provide a means to accommodate the electrical connection. This section describes the most common electrical enclosure options available.

3000 Series Enclosure Options

3000 Series integrated coils are a one-piece assembly which requires only a nut and washer (enclosure code N0) to fasten to the pressure vessel. The 3000 Series conventional enclosure selection complements the integrated coil offering providing flexibility in product type and installation.

Coil Picture	Enclosure Code	Description	Applicable Coils
	RR	Grommet Enclosure	T1J1, T3J1
	BB	1/2" Conduit Connection	T1J1, T3J1
	YY	Yoke. For use where open enclosure is suitable	T1J1, T3J1
	N0	Nut and Washer for Integrated Molded coils	M1S1, M4S1 M3J5, M6J5
	N0	Nut and Washer for 1/2" Conduit NEMA coils	MC11, HC11

3000 Series Repair Kits/ Accessories

Repair kits are available for all Skinner 3000 Series valves. These kits include a new plunger assembly and plunger return spring. Specify the kit you need by the part number listed, which corresponds to the type of valve and seal material to be rebuilt.

Flow Pattern	NBR	Neoprene	EPDM	FKM
2-Way Normally Closed	3K3121N	3K3121C	3K3121E	3K3121V
2-Way Normally Open	3K3129N	3K3129C	3K3129E	3K3129V
3-Way Normally Closed	3K3131N	3K3131C	3K3131E	3K3131V
3-Way Normally Open	3K3139N	3K3139C	3K3139E	3K3139V
3-Way Multipurpose	3K3133N	3K3133C	3K3133E	3K3133V
3-Way Directional Control	3K3138N	3K3138C	3K3138E	3K3138V

Universal Mounting Bracket–B19-006 *Brass Adaptor with Gasket = 300-22-003* *SS Adaptor with Gasket = 300-22-004*

A, B, C, MB AND V9 SERIES INFORMATION

Coils

To determine the approximate Holding or Inrush Current for AC voltages including 24/60, 120/60, 240/60 and 480/60 volts in amperes, divide the voltage into the VA rating indicated in the AC Power Consumption tables. DC valves have no inrush current. The current rating in amperes for DC valves are shown in the DC Table. Figures are based on nominal values and will vary slightly depending on operating voltage and coil tolerances.

A, B, C, MB and V9 Series

Valve Series	AC Power Consumption Ratings VA Holding	VA Inrush
Two-way B	17	9.7
Three-way B	19	12
Two-way C	25	16
Three-way C	25	16
Two-way A	122	49
Three-way A	82	40
Three-way MB	12	6.5
Four-way MB	12	6.5
Four-way V9*	32.5	17.5

** Per coil*

Current (Amperes) Valve Series	6 Volt	DC Current Consumption Ratings Coil Type 12 Volt	24 Volt	120 Volt
Two-way B	1.05	0.53	0.26	0.05
Three-way B	1.05	0.53	0.26	0.05
Two-way C	1.17	0.58	0.29	0.06
Three-way C	1.17	0.58	0.29	0.06
Two-way A	-	-	-	-
Three-way A	2.33	1.17	0.58	0.12
Three-way MB	0.83	0.42	0.21	0.04
Four-way MB	0.83	0.42	0.21	0.04
Four-way V9*	1.42	0.71	0.35	0.07

** Per coil*

Solenoid Valve Operators

Skinner Valve manufactures a line of 2-and 3-way operators in normally open, normally closed, dual purpose, multipurpose, and directional control configurations. These valve operators are similar to those used in Skinner valves and are manufactured to the same high quality standards.

The operator typically consists of a coil and enclosure, a stainless steel sleeve, spring and plunger assembly, and a flange seal. A wide selection of optional features is available and provides the basis for custom design. Both standard and explosion-proof enclosures are available.

The operators may be mounted on magnetic structures, or non-magnetic structures with the addition of a flux plate. Prints detailing mating dimensions are available for all the operators listed. For a complete part number to suit your particular application consult Skinner Valve.

Operator Type	Orifice Range	Flow Range (Cv)	Pressure Range (PSI)	Operator Prefix	Power (watts)	Notes
2W NC	1/2"	2.66	0-15	PA2	16	Zinc enclosure, nitrile seal
	1/32"-1/8"	0.019-0.24	vac-400	PB2*	7	Steel enclosure, nitrile seal
	1/16"-5/32"	0.10-0.39	vac-275	PC2	8	Steel enclosure, nitrile seal
2W NO	1/32"-3/32"	0.019-0.13	vac-400	PB11*	7	Steel enclosure, viton seal
3W NC	3/32"-5/32"	0.20-0.47	0-250	PA3	16	Zinc enclosure, nitrile seal
	1/32"-3/32"	0.019-0.16	0-200	PB13*	7	Steel enclosure, viton seal
	3/64"-1/8"	0.05-0.24	0-175	PC3	7.5	Steel enclosure, viton seal
3W NO	3/32"-5/32"	0.21-0.45	0-250	PA5	16	Zinc enclosure, nitrile seal
	1/32"-3/32"	0.019-0.16	0-200	PB15*	7	Steel enclosure, viton seal
	3/64"-1/8"	0.05-0.26	0-175	PC5	7.5	Steel enclosure, viton seal
3W MP	3/32"-5/32"	0.21-0.45	0-150	PA4	16	Zinc enclosure, nitrile seal
	1/32"-3/32"	0.019-0.16	0-150	PB14*	7	Steel enclosure, viton seal
	3/64"-1/8"	0.05-0.16	0-150	PC4	7.5	Steel enclosure, viton seal
3W DC	3/32"-5/32"	0.21-0.45	0-250	PA6	16	Zinc enclosure, nitrile seal
	1/32"-3/32"	0.019-0.16	0-250	PB16*	7	Steel enclosure, viton seal

* *These operators may need to have flux plates added depending upon the magnetic properties of the body to which they are mounted.*

2W = Two Way *NC = Normally Closed* *MP = Multipurpose*
3W = Three Way *NO = Normally Open* *DC = Directional Control*

K-Series Accessories

Skinner Valve offers a wide selection of accessories available for use on all K- Series microminiature solenoid valves. Accessories must be ordered separately from the valve.

K-SERIES THREE-WAY AND FOUR-WAY VALVE VOLTAGE SUMMARY

The following chart lists all available accessories, a brief description and the appropriate part number.

	K3F	K3H	K3P		K4H	K4M	K4P		K4R	K4RL	K5R
Voltage	**0.5 Watt**	**0.5 Watt**	**0.5 Watt**	**1.8 Watt**	**0.5 Watt**	**2.0 Watt**	**0.5 Watt**	**1.8 Watt**	**0.5 Watt**	**1.8 Watt**	**0.5 Watt**
5VDC	*	*	*		*		*		*	*	*
6VDC	*	*		*	*			*			
12VDC	*	*	*	*	*	*	*	*	*	*	*
24VDC	*	*	*	*	*	*	*	*	*	*	*
48VDC	*	*			*						
24VAC/60Hz				*				*	*		*
120VAC/60Hz			*	*			*	*	*		*

* *Valves may be ordered for use on these specific voltages.*

K-SERIES ACCESSORIES

Description	Model Number
Hose Fitting for use with .087” ID tubing M3 Thread	KM-60-009
M5 Thread	KM-60-012
Hose coupling for use with .087” ID tubing	KM-60-010
Hose fitting for use with 1/16” ID tubing M3 Thread	KM-60-015
#10-32 Thread	KM-60-018
Hose fitting for use with 1/8” ID tubing M3 Thread	KM-60-014
Adapter M3 to #10-32 female	KM-60-016
“L” fitting assembly for use with .087” ID tubing M3 Thread	KM-60-011
”T” fitting for use with .087”” ID tubing	KM-60-007
Adapter M3 to M5 male thread	KM-60-006
#10-32 to 1/4” NPT male thread	KM-60-004
1/8 NPT th’d to 1/4” NPT male thread	KM-60-005
Screw plug M3 (requires gasket)	KM-60-008
M5	KM-60-013
Gasket M3	KM-60-001
M5	KM-60-003
Spacer for PCB mounting with 2 screws	KM-60-002
Nylon tubing .087” ID, 65 foot roll	KM-22-018
Exhaust muffler M5	KM-60-017
Exhaust restrictor M5	K08-001
Adapter M5 male to M3 male thread	KM-60-021
Adapter #10-32 female to 1/8” NPT male thread	KM-60-022

FLOW CONTROL VALVES

	Part Number KM-22-014 M3	Part Number KM-22-015 M5
Port Thread Size	M3	M5
Cv	0.02	0.05
Pressure Rating	115 PSI	115 PSI
Operating Temperature	40-140°F	40-140°F

OPPORTUNITY DATA SHEET

TARGET ACCOUNT _____ DATE _____

ADDRESS _____

DISTRIBUTOR (if applicable) _____ TELEPHONE NO. _____

CONTACT _____ TITLE _____ TELEPHONE NO. _____

APPLICATION _____

❑ NEW APPLICATION ❑ EXISTING APPLICATION TARGET PRICE $ _____

CRITICALDATES:

FEASIBILITY _____ SAMPLE DELIVERY _____ QUOTATION _____ PRODUCTION _____

	INITIALORDER	**YEAR 1**	**YEAR 2**
VOLUME (UNITS)	_____	_____	_____

TOTAL QUANTITY OF SOLENOID VALVES USED BY THIS COMPANY _____

PARKER'S SHARE _____% COMPETITOR'S SHARE _____%

VALVE CURRENTLY USED: MANUFACTURER _____ MODEL _____

COMPANY'S MOTIVATION TO BUY PARKER VALVES (CHECK ONLY ONE)

❑ QUALITY ❑ COST REDUCTION ❑ DISTRIBUTOR SERVICE ❑ SECOND SOURCE

❑ PROBLEM WITH CURRENT SUPPLIER _____

❑ OTHER _____

VALVE TYPE ❑ **2-WAY** ❑ **3-WAY** ❑ **4-WAY**

DE-ENERGIZED POSITION

❑ Normally Open ❑ Normally Closed ❑ Directional Control ❑ Multipurpose

PORT SIZE FLUID CONNECTION

_____Inch NPT _____Other

ORIFICE DIAMETER

Inlet _____ or CV _____

Exhaust _____ or CV _____

FLOW RATE

Gasses _____SCFM when inlet pressure is _____PSIG
and outlet pressure is _____PSIG

Liquids _____GPM when inlet pressure is _____PSIG
and outlet pressure is _____PSIG

VOLTAGE

Min _____ Max. _____ Nom. _____

❑ AC _____ ❑ HZ _____ ❑ DC _____

ELECTRICALENCLOSURES

❑ Standard Connection ❑ Conduit ❑ Explosion Proof

❑ Junction Box ❑ Grommet ❑ Watertight

Other _____

DUTYCYCLE

Continuous duty: energized more than 1 hour

Energized _____ hrs. De-energized _____ hrs.

Intermittent duty: energized less than 1 hour

Maximum energized _____ minutes

Minimum de-energized _____ minutes

CYCLING DATA

Operating speed _____ CPM

VIBRATION AND SHOCK

❑ Not a factor

❑ Vibration _____CPS at _____G's

❑ Shock _____G's duration for _____M. Sec.

Mounted in ❑ Vertical plane ❑ Horizontal plane

PRESSURE OR VACUUM

Maximum Static Pressure _____ PSI

Maximum Pressure Differential _____ PSI

Minimum Pressure Differential _____ PSI

Maximum Vacuum _____ PSI inches HG

FLUID BEING HANDLED

Description _____

If gas ❑ Lubricated ❑ Non-lubricated

Temperature min. _____ F/ max. _____ F

Viscosity _____
(if over no. 10 SAE or 100 SSU at 100F)

ALLOWABLE INTERNALLEAKAGE

❑ None ❑ _____ cc/min at _____ PSID

CURRENT DRAW LIMITATIONS

Max. amps _____ max. watts _____

COILTYPE

❑ Lead wire _____ inch long _____ AWG

❑ Spade terminal ❑ DIN

❑ Other _____

AMBIENT CONDITIONS

❑ Temperature max. _____ F/ min. _____ F

❑ Spade terminal ❑ DIN

❑ Other _____

LIFE EXPECTANCY

Total cycles per year _____ Number of years _____

APPROVALREQUIRED

❑ None ❑ UL listed ❑ CSA ❑ CE ❑ Cenelec

❑ UL component recognition

❑ Other _____

Additional features desired _____

Completed by _____
Name

_____
Company

_____
Telephone

DATASHET.DOC

TERMS AND CONDITIONS OF SALE

1. TERMS AND CONDITIONS OF SALE The order shall be subject to the terms and conditions set forth herein, notwithstanding any terms and conditions that may be contained in any order, acknowledgment or other form of Buyer. Such terms and conditions of Buyer shall not bind Seller unless accepted by it in writing, whether or not they manually alter this order. This order shall be governed in all respects by the law of the State of Ohio.

2. Stenographical and clerical errors are subject to correction. Until order is accepted, prices are subject to change without notice. All quotations, unless otherwise stated, are for immediate acceptance. All orders and contracts subject to approval if accepted by a salesman or selling agent. Prices do not include special taxes now in effect or later put in effect.

3. PAYMENT Payment shall not prejudice claims on account of omissions or shortages but no such claim will be allowed unless made within 30 days after receipt by Buyer.

4. Accounts are opened only with firms or individuals on approved credit. The Seller reserves the privilege of declining to make deliveries except for cash whenever, for any reason, doubt as to the Buyer's financial responsibility develops and shall not, in such event, be held liable for non-performance of contract in whole or in part.

5. Terms are Net 30 days. F.O.B. New Britain, Connecticut, where credit rating has been established. In all other cases C.O.D. or cash with order.

6. There is a minimum order of $100.00 netfor manufacturer's terms unless specific minimum quantities are noted on the quotation.

7. All Shipments are made F.O.B. point of shipment. After delivery to the carrier, the risk of loss shall be on the Buyer and any claims for loss or damage in transit must be filed by the Buyer.

8. DELIVERY Seller shall not be liable for any delays in or failure of delivery due to acts of God or public authority, labor disturbances, accidents, fires, floods, extreme weather conditions, failure of and delays by carriers, shortages of material, delays of a supplier or any other cause beyond Seller's control. Buyer's requested delivery date or schedule shall be approximate and subject to Seller's acceptance.

9. PREMIUM FREIGHT Shipments are made via common carrier. Any premium freight must be requested and paid for by the Buyer.

10. In making of materials to customer specifications, it is impossible to produce exactly the quantity ordered and it is, therefore, agreed all orders are subject to over or under shipment of 5% on orders over 500 pieces, 10% on orders less than 500 pieces.

11. WARRANTIES Seller warrants the goods sold hereunder to be free from defects in material and workmanship under normal use and service for a period of two (2) years from date of shipment from Skinner Valve's facility. THE ABOVE WARRANTIES COMPRISE SELLER'S SOLE AND ENTIRE WARRANTY OBLIGATIONS AND LIABILITY TO BUYER, ITS CUSTOMERS OR ASSIGNS IN CONNECTION WITH GOODS SOLD HEREUNDER SELLER EXTENDS NO WARRANTY TO THE ULTIMATE CONSUMERS OR USERS. ALL OTHER WARRANTIES, EXPRESS OR IMPLIED, INCLUDING BUT NOT LIMITED TO, WARRANTIES OF MERCHANTABILITY AND FITNESS, ARE EXPRESSLY EXCLUDED. Seller's sole obligation under these warranties shall be to repair or replace any item or part thereof which is proved to be other than as warranted. When claiming a breach of the above warranties, Buyer must notify Seller promptly whereupon Seller will either examine the goods at their site or issue shipping instructions for return to Seller (transportation cost prepaid by Buyer). The above warranties shall terminate unless Buyer in writing claims for breach thereof within 90 days from Sellers plant where damage is not directly due to a defect in material or workmanship, nor do they apply to goods altered or repaired except when performed under Seller's specific authority, nor to articles furnished by Buyer or acquired at Buyer's request and or to Buyer's specifications.

12. CONSEQUENTIAL DAMAGES In no event shall Seller be liable for consequential or special damages arising out of a delay in or failure of delivery, defects in material or workmanship, or arising out of breach by Seller of any other term or obligation of Seller under this contract.

13. CHANGES IN SPECIFICATIONS OR DESIGN If Buyer requests changes in specifications or designs related to any goods, delivery schedules shall be revised, if necessary, and an equitable adjustment, upward or downward, shall be made in price if warranted.

14. CANCELLATIONS AND RESCHEDULES Cancellations and reschedules are subject to acceptance by Seller, and are also subject to cancellation charges and price increases.

15. RETURNED GOODS No material shall be returned without our consent. When material is returned, with our consent, credit will be allowed only for that which is in good condition and can be resold. Freight must be prepaid on such shipments. The amount of freight paid by us on the original shipment to consignee is not subject to credit. Credit for approved returns is provided at a discount of 58% off list price at the time of purchase.

16. SPECIAL TOOLS Any special tools, jigs, patterns, etc. which Seller makes or acquires for Buyer, notwithstanding any change therefore, shall be and remain Seller's property subject to its possession and control: In no event shall Buyer have any tooling belonging to Seller which is utilized in the production of goods for Buyer, or which has been converted or adapted by Seller for such use, notwithstanding any charge for any such utilization, conversion or adaptation Seller shall have the right to alter discard or otherwise dispose of any tooling without liability to Buyer when for two (2) consecutive years no orders have been received from Buyer requiring the use of such tooling.

17. BUYER'S PROPERTY Any design, tools, patterns, drawings, information or equipment furnished by Buyer, or any special tools made or acquired for the Buyer by the Seller which becomes Buyer's property, shall be used only in the production of goods ordered by Buyer and not otherwise, unless by Buyer's written consent, provided that such property may be considered obsolete and destroyed by Seller when for two (2) consecutive years no orders are received from Buyer for products to be made with such property. Seller agrees to exercise reasonable care with respect to such property and equipment while in its possession and control, but shall not be responsible for loss or damage occurring without its fault or negligence or for ordinary wear and tear.

18. PATENT INDEMNITY Seller shall have no liability for patent infringement unless the goods furnished hereunder in and of themselves constitute the infringement. If they do, and Seller is notified of the claim of infringement within ten days after such claim is received by the Buyer and is permitted to settle or defend such claim. Seller will indemnify the Buyer against the reasonable expense of defending suit and against any judgment or settlement to which Seller agrees. However, such indemnity will be limited to an amount not exceeding the price paid by Buyer to Seller for infringing goods. If an injunction is issued against the further use of the goods, Seller will have the option of either procuring for the Buyer the right to use the goods, replacing them with non-infringing goods, modifying them so that they become non-infringing, or refunding the purchase price. The forgoing constitutes Seller's entire warranty and liability as to patents. If the goods furnished hereunder are in accordance with a design furnished by the Buyer, the Buyer will defend and save harmless Seller from all costs, expenses and judgments on account of any claim of infringement of any patent.

19. TAXES Any sales, use, excise or similar tax payable by Seller which is or may be imposed by any taxing authority upon the manufacture, sale or delivery of goods covered by this order, or any increase in rate of any such tax now in force, shall be added to the sales price, if not collected at the time of payment of sales price, Buyer will hold Seller harmless.

20. ADDITIONAL CONDITIONS APPLICABLE TO ORDERS PLACED UNDER GOVERNMENT CONTRACTS OR SUBCONTRACTS THEREUNDER If Buyer notifies Seller that goods ordered hereunder are for use under a prime contract with an agency of the United States Government, the following terms and conditions of the Armed Services Procurement Regulations shall be incorporated into Seller's terms of sale insofar as Buyer may be required to incorporate such provision in it subcontracts or insofar as applicable to the goods hereunder. WALSH-HEALEY PUBLIC CONTRACTS ACT (12-605), RENEGOTIATION (7-103-13), BUY AMERICAN ACT (6-104,5), EXAMINATION OF RECORDS (7-104 15), AUDIT AND RECORDS (7-104,41), PRICE REDUCTION FOR DEFECTIVE COST OR PRICING DATA (7-104,29), CONVICT LABOR (12-203), NOTICE OF THE GOVERNMENT OF LABOR DISPUTES (7-104,4), WORK HOURS ACT (12-303,1), EXCESS PROFITS (7-104,11) MILITARY SECURITY REQUIREMENT (7-104,12), TERMINATION (8-706), EQUAL OPPORTUNITY (12-802).

21. PRICES SHOWN HEREON ARE STATED AT CURRENT RAW MATERIAL COSTS AND ARE SUBJECT TO CHANGE AS FLUCTUATIONS IN THE MARKET SO DICTATES.

22. OTHER SERVICES The prices issued in this schedule are for standard packaged products only. Any additional or supplemental services, material, or product marking or identification are subject to additional charges at the discretion of Parker.

23. Where the Buyer requires tests for inspection not regularly provided,Parker reserves the right to charge an additional reasonable amount.

24. COMPLIANCE WITH LAW Seller warrants that products sold or services furnished will be produced or furnished in full and complete compliance with all applicable federal, state, or local statutes, rules, regulations and orders, including those pertaining to labor, hours and conditions of employment, and in particular the Fair Labor Standards Act, as amended, and Executive Order No. 11248 (Equal Employment Opportunity) effective October 24, 1965, with all amendments thereto or as it may be superseded. Seller agrees that all the provisions of said Executive Order, as it may be amended or superseded, are hereby made a part hereof by reference and are binding upon Seller. Seller further agrees and confirms that Seller as a subcontractor or vendor has complied with and will comply with the provisions of said Executive Order and the rules and regulations promulgated under the authority thereof, including among others, reporting requirements.

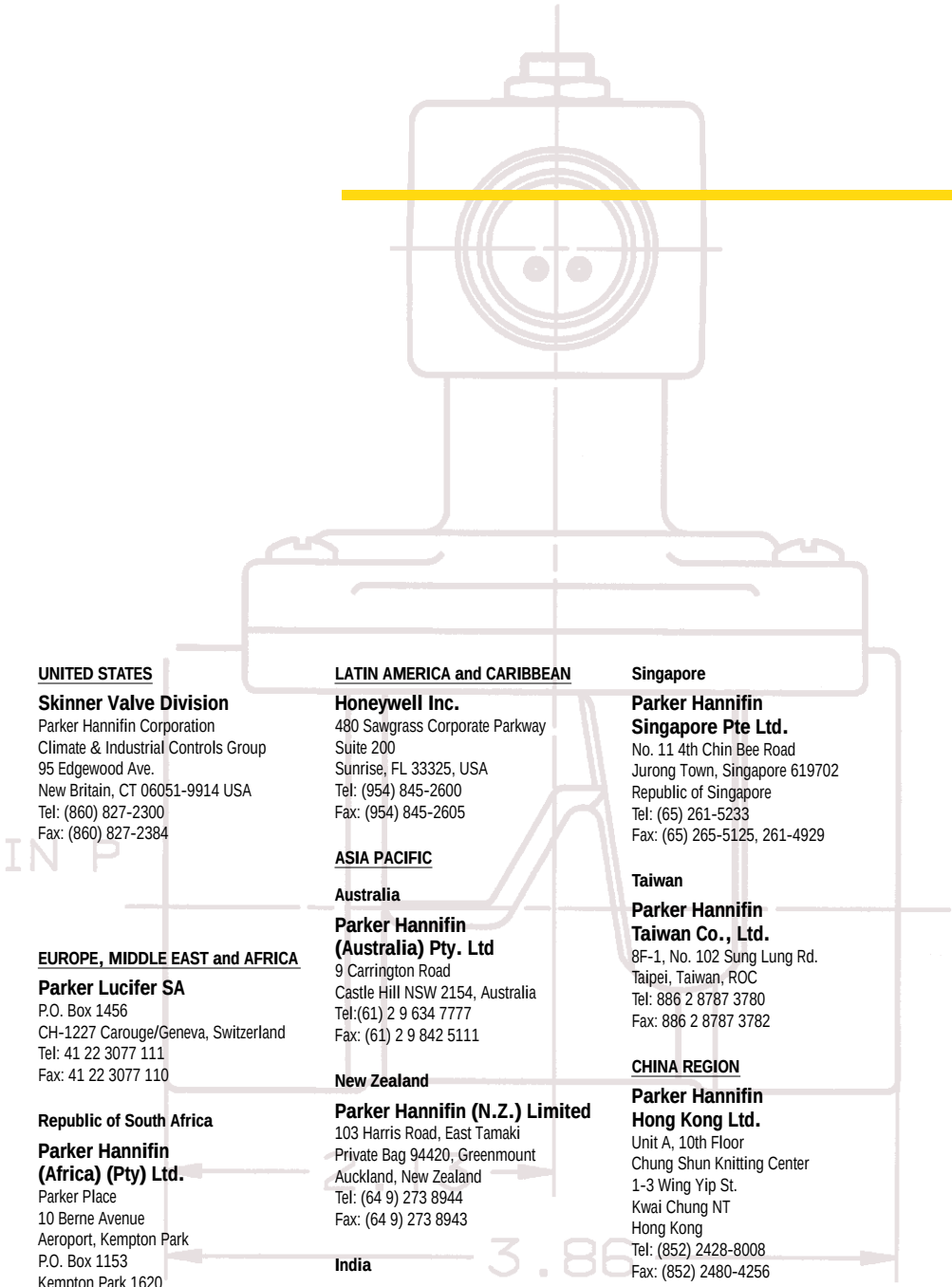

Climate & Industrial Controls

UNITED STATES

Skinner Valve Division
Parker Hannifin Corporation
Climate & Industrial Controls Group
95 Edgewood Ave.
New Britain, CT 06051-9914 USA
Tel: (860) 827-2300
Fax: (860) 827-2384

EUROPE, MIDDLE EAST and AFRICA

Parker Lucifer SA
P.O. Box 1456
CH-1227 Carouge/Geneva, Switzerland
Tel: 41 22 3077 111
Fax: 41 22 3077 110

Republic of South Africa

Parker Hannifin (Africa) (Pty) Ltd.
Parker Place
10 Berne Avenue
Aeroport, Kempton Park
P.O. Box 1153
Kempton Park 1620
Republic of South Africa
Tel: (27) (11) 392-7280
Fax: (27) (11) 392-7213

CANADA

Parker Hannifin (Canada) Inc.
Skinner Valve Division
530 Kipling Avenue
Toronto,Canada
M8Z 5E6
Tel: 416 255-1585
1-888-249-4806
Fax: 416-255-2107

MEXICO

Honeywell S.A. de C.V.
Av. Constituyentes No 900
Col. Lomas Altas
11950 Mexico, D.F., Mexico
Tel: (52-5) 259-1966
Fax: (52-5) 570-2402

LATIN AMERICA and CARIBBEAN

Honeywell Inc.
480 Sawgrass Corporate Parkway
Suite 200
Sunrise, FL 33325, USA
Tel: (954) 845-2600
Fax: (954) 845-2605

ASIA PACIFIC

Australia

Parker Hannifin (Australia) Pty. Ltd
9 Carrington Road
Castle Hill NSW 2154, Australia
Tel:(61) 2 9 634 7777
Fax: (61) 2 9 842 5111

New Zealand

Parker Hannifin (N.Z.) Limited
103 Harris Road, East Tamaki
Private Bag 94420, Greenmount
Auckland, New Zealand
Tel: (64 9) 273 8944
Fax: (64 9) 273 8943

India

Honeywell India 2152
403/404 "Madhava"
Bandra Kurla Complex
Bandra (East)
Bombay 400 051, India
Tel: 91-22 643 3275
Fax: 91-22 640 9513

Japan

Yamatake-Corporation
1-12-2, Kawana, Fujisawa
Kanagawa, 251
Tel: (81) 466 20 2232
Fax: (81) 466 20 2193

Korea

LG-Honeywell Co Ltd
17F, Hanil Group Building
191 Hangangro-2 ga, Yongsan-gu
Seoul 140-702, Korea
Tel: (822) 799 6011
Fax: (822) 792 9013

Singapore

Parker Hannifin Singapore Pte Ltd.
No. 11 4th Chin Bee Road
Jurong Town, Singapore 619702
Republic of Singapore
Tel: (65) 261-5233
Fax: (65) 265-5125, 261-4929

Taiwan

Parker Hannifin Taiwan Co., Ltd.
8F-1, No. 102 Sung Lung Rd.
Taipei, Taiwan, ROC
Tel: 886 2 8787 3780
Fax: 886 2 8787 3782

CHINA REGION

Parker Hannifin Hong Kong Ltd.
Unit A, 10th Floor
Chung Shun Knitting Center
1-3 Wing Yip St.
Kwai Chung NT
Hong Kong
Tel: (852) 2428-8008
Fax: (852) 2480-4256

Parker Hannifin Beijing Office
Suite 01B. 5th Floor, CITIC Building 19
Jianguomenwai Avenue
Beijing 100004, China
Tel: 8610 6500 7888
Fax: 86 10 6500 6339

Parker Hannifin Shanghai Office
Rm 703, Dynasty Business Center
No. 457 North Wu Lu Mu Qi Road
Shangai 200040, China
Tel: 86 21 62490308
Fax: 86 21 62494657