Directional Control Valve H170CF

Proportional Valve for Systems with Fixed Pump Displacement

Catalogue HY17-8545/UK
July, 2005

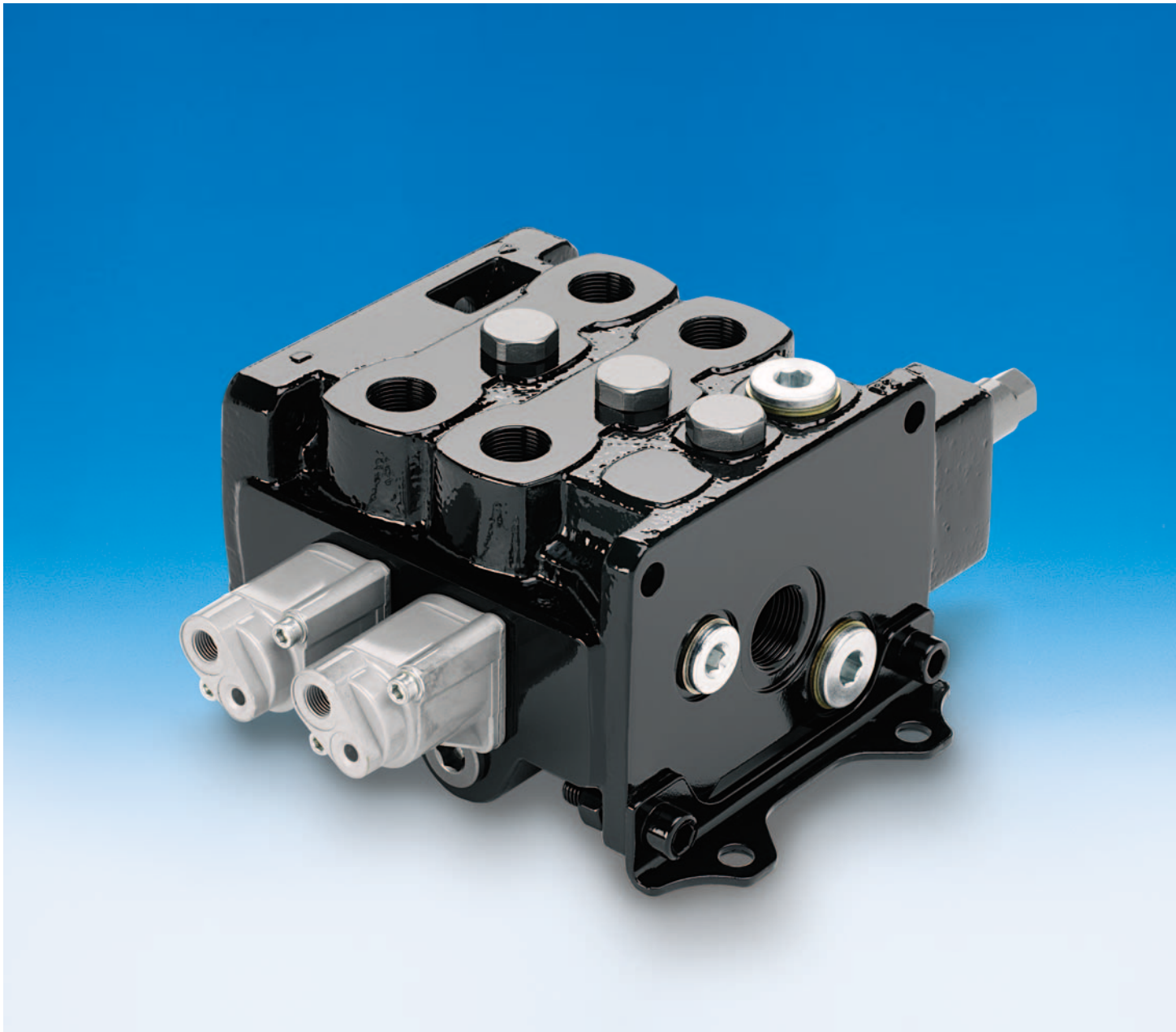

Catalogue layout

This catalogue has been designed to give an overview of the H170CF directional valve and to show how easily it can be customized to meet your needs. Apart from general information and basic technical data, the catalogue contains descriptions of the variety of options available for the different function areas of the valve. After you have studied the options and made your selection, we will tailor your valve to meet your requirements.

Each function area is given as a subheading, followed by a brief description. When options are available for the function area, the subheading is followed by an "Item number" in square brackets, e.g. Main pressure relief valve [11]. This is followed by a series of coded options, e.g. PS, PB, PY, together with a brief description of what each code represents. Alternatively, one or more pressure, flow or voltage options are given.

On page 8 is a general circuit diagram showing the basic function areas of the H170CF valve, together with the item numbers or letters used to represent them. Naturally, the same item numbers or letters are used in all sub-circuit diagrams that appear elsewhere in the catalogue in conjunction with descriptions of the respective function areas. All sub-circuit diagrams have been extracted from the general circuit diagram. Please note that, unless stated otherwise, all sections and views of the valves have been drawn as seen from the inlet section.

How to order your valve

The next step is to fill in a "Customer Specification Form" (CSF) to specify the options and characteristics you wish to be incorporated into your valve. The CSF contains the same item numbers that appear in square brackets in this catalogue. To specify your valve, simply choose the common and spool-section specific options you require and enter the corresponding code or value into the box for the relevant item number in the CSF.

Should you require assistance completing the CSF, please do not hesitate to contact your nearest Parker representative, who will either help personally or refer you to the appropriate product specialist. The information in your CSF will be entered into our computerized valve specification program, which initiates the assembly process and generates a unique product ID number that is subsequently stamped into the data plate on your valve. Your valve specifications remain on our database to facilitate rapid identification in the event of subsequent re-ordering or servicing of your valve.

Early consultation with Parker saves time and money

Our experienced engineers have in-depth knowledge of the different types of hydraulic system and the ways in which they work. They are at your disposal to offer qualified advice on the best system for the desired combination of functions, control characteristics and economic demands. By consulting Parker early in the project planning stage, you are assured of a comprehensive hydraulic system that will give your machine the best possible operating and control characteristics.

Subject to alteration without prior notice. The graphs and diagrams in this catalogue are typical examples only. While the contents of the catalogue are updated continually, the validity of the information given should always be confirmed. For more detailed information, please contact Parker.

Conversion factors

1 kg	= 2.2046 lb
1 N	= 0.22481 lbf
1 bar	= 14.504 psi
1 l	= 0.21997 UK gallon
1 l	= 0.26417 US gallon
1 cm^3	= 0.061024 in^3
1 m	= 3.2808 feet
1 mm	= 0.03937 in

9/5 °C + 32 = °F

Contents

Page

[00] Item numbers in square brackets can be cross-referenced with item numbers in Customer Specification Form.

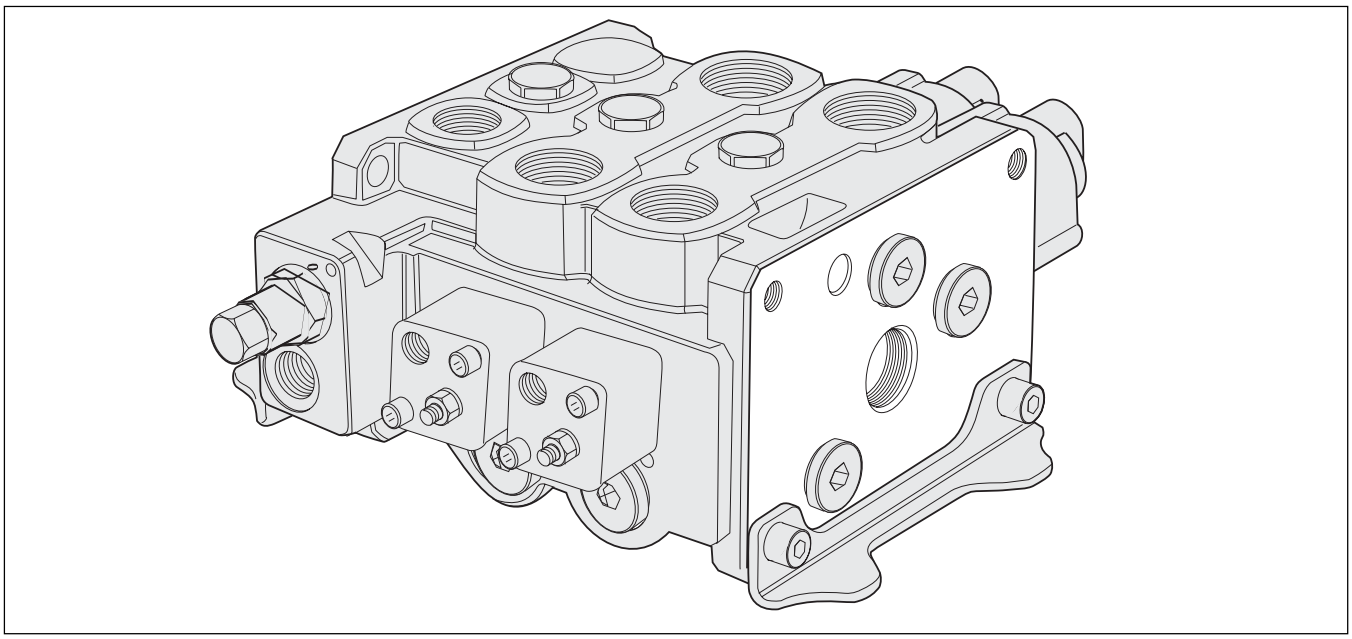

The H170CF is a directional valve of the monoblock type. The valve blocks can be flanged together to form a valve package for either single or multi-pump operation. The blocks, which are connected in parallel internally, can be flanged together as required, with either parallel or series connection between the blocks. The H170CF is equipped with a pump unloading function to give low energy losses and great system reliability. The valve is designed for use in many different kinds of machine, from digger-loaders, garbage trucks, container trucks and forklift trucks to surface and underground mining machines. It can also be used to advantage in industrial applications.

With its facilities for flange mounting and wide range of optional functions and standard accessories, the H170CF is an exceptionally versatile valve. This helps machine builders to optimize their hydraulic systems to give the best possible operating and control characteristics.

Compact system construction

Since the H170CF can contain many integrated functions, the need for external piping and auxiliary equipment is minimal. This enables the hydraulic system to be constructed in a compact, neat and simple way.

Freedom in machine design

The H170CF can be equipped with spool actuators for direct control or for ON/OFF or proportional remote control by means of different media. This gives great freedom terms of component location and enables piping, wiring etc. to be run in the most practical way.

Economy

In combination with no-load idling, constant-flow systems (CFO) give low system costs and good operating economy. The possibility of integrating complete function solutions by flanging different function blocks directly to the valve gives low overall system costs.

Safety

The valve is of robust construction and offers the possibility of building all functions into a single unit. This means that individual functions are well protected inside the monoblock and that the need for exposed pipes, hoses etc. is very minimal. Moreover, it keeps the system simple, thus facilitating servicing and the training of personnel. For even greater safety, the H170CF can be equipped with a remote-controlled pump unloading function that drains the pump flow directly back to tank.

Design

The H170CF is a compact monoblock valve. The valve block can contain 1 to 4 spool sections. The spool sections are connected in parallel internally and furnished with individual load-hold check valves as standard. Two or more monoblocks can be flanged together to form a larger unit, with different internal connections between the blocks and the possibility of single or multi-pump operation. The valve is designed for system pressures up to 250 bar. The service ports can be equipped with port relief valves with maximum pressure settings of 280 bar. The pump flow range through the valve is 0-170 l/min, depending on how the valve is equipped. Spools for two flow ranges are available, with nominal flow rates of 95 l/min and 140 l/min respectively. The return flow through each service port can be up to 330 l/min, depending on the type of spool.

The H170CF is equipped with a pilot-operated main pressure relief valve with facilities for pump unloading and/or several pressure levels in the pump circuit.

Essential characteristics

- The pilot-operated main pressure relief valve can also be equipped with electric or hydraulic remote-controlled pump unloading. This simplifies the construction of the safety system, since an unloaded valve delivers no pressure.
- Several blocks can be flanged together to make bigger units, with different internal connections between the blocks. This enables compact system construction for single or multi-pump operation. Parallel or series connection between blocks enables many application-adapted system solutions to be devised.
- Wide range of spool actuators, including hand-operated and both ON/OFF and proportional hydraulic, pneumatic, electro-hydraulic or electro-pneumatic remote-controls, most with facilities for manual override in emergencies.
- High-grade materials and great manufacturing precision give a quality valve with low internal leakage and long service life. The same features make the product easy to service, thanks to accurate clearances and low wear rates.

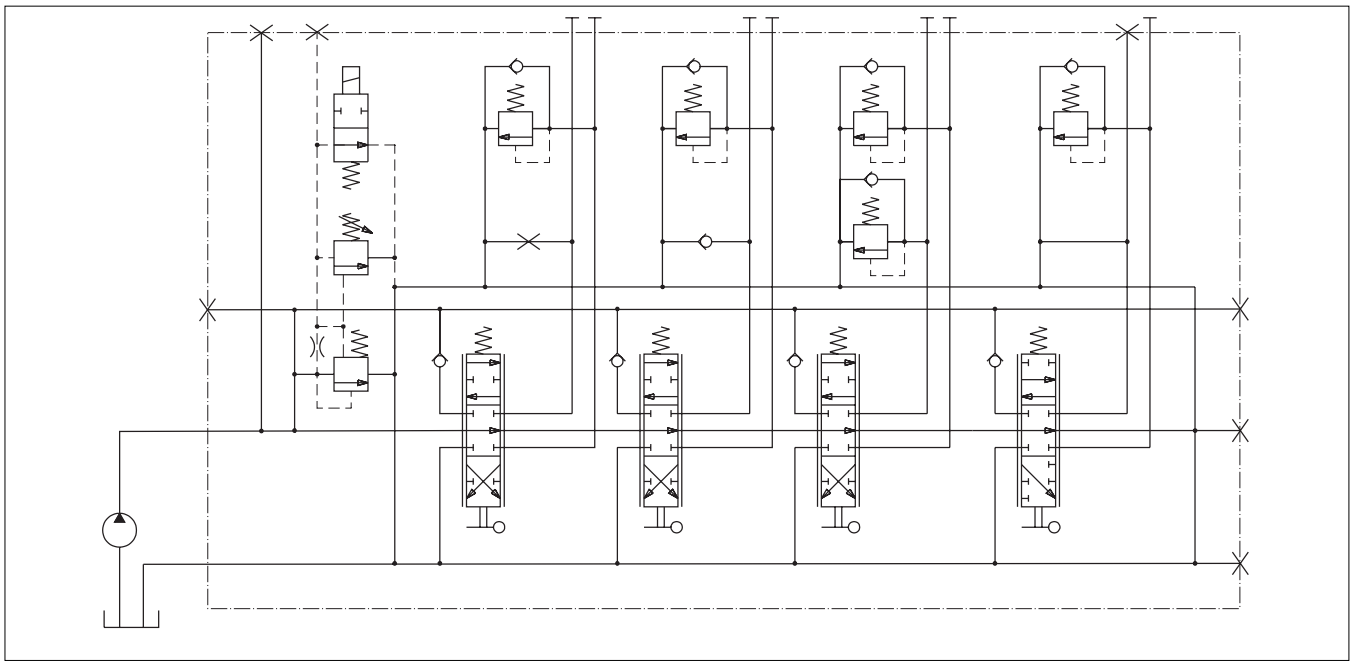

Basic circuit diagram, CFO

Constant-flow systems (CFO)

A constant-flow system is a system in which the flow remains constant at a given engine speed, while the pressure is adapted according to demand.

The CFO system is the most well proven of systems for mobile machines. It contains less complicated components compared with other types of system and is thus relatively insensitive to impurities in the hydraulic oil. Any oil that is not directed out to a consumer is pumped back to tank via the free-flow gallery in the valve. When several lifting functions are activated simultaneously, the pressure is determined by the heaviest load. Simultaneously operated functions should therefore have roughly the same pressure needs, or be divided into separate circuits to minimize cross-functional interference and give good operating economy. Provided that the greater part of pump capacity is utilized, the CFO system is very economical to operate. For this reason, it is important for the pump to be dimensioned correctly.

Control characteristics

In hand-operated CFO systems, there is no clear-cut connection between the stroke of the lever and the speed of the load. The load speed is influenced more by the weight of the load and the directions of force and movement, and also by the pump flow and how many other load functions are operated simultaneously. The reason for this is that, when several functions are activated at the same time, the flows redistribute themselves so that the pressure drop in the flow paths becomes equal. The use of application-adapted valve spools gives considerably better control characteristics during simultaneous-operation of the spools. In some cases, this can result in higher energy losses during the fine-metering stage. In certain applications, however, this characteristic is exploited, since it enables the operator to sense the weight of the load he is handling (so-called force control).

In several of our proportional remote-control systems, the valve spool is “pressure compensated”, which means that the regulated flow rate remains constant for a given lever stroke, regardless of the pressure variations, i.e. speed control.

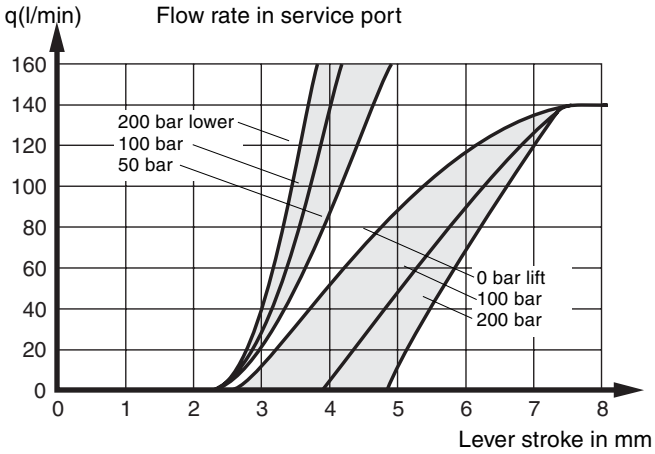

Hand operated D-spool, Q140. In H170CF valves with hand-operated spools, speed is affected by the weight of the load, i.e. the heavier the load, the longer the lever stroke needed before the load starts to move.

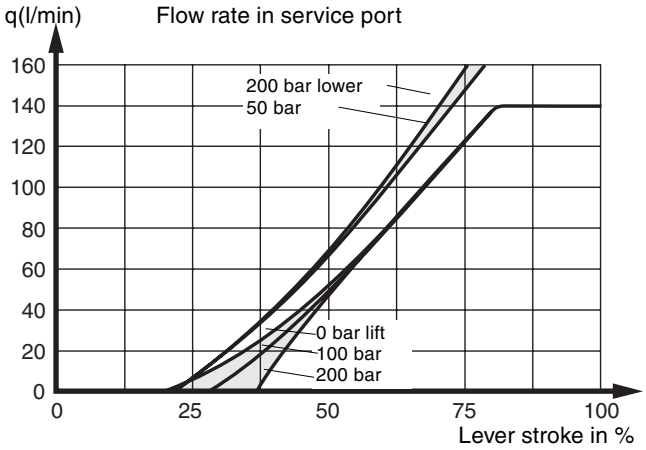

Remote controlled DPC spool, Q140. In H170CF valves with closed spool actuators (PC), the spools are pressure compensated, with the result that the load’s effect on speed is minimal.

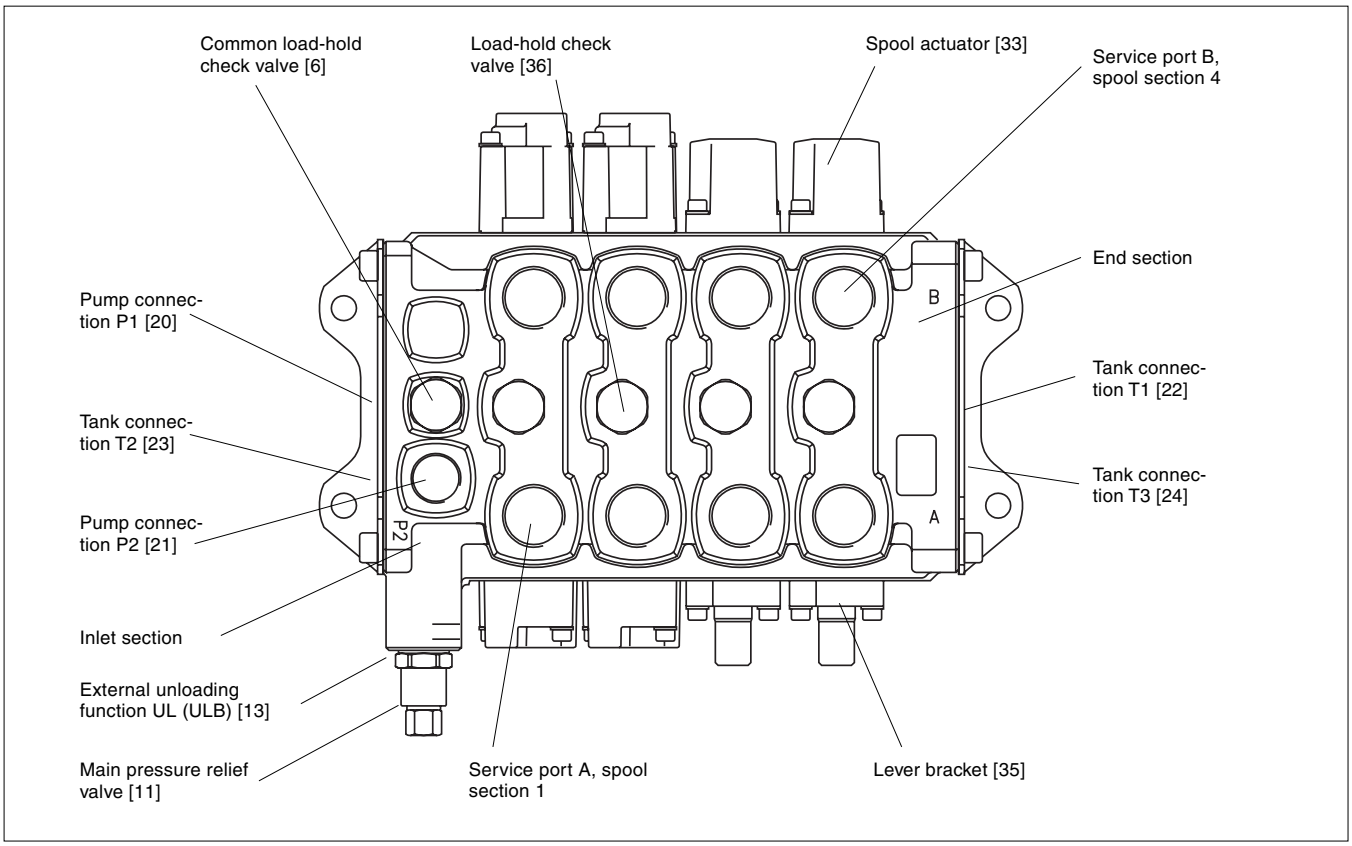

Pressure

Stated pressures are the maximum absolute shock pressures at 10 bar tank pressure.

Pump input:	max. 250 bar	(3625 psi)
Service ports:	max. 280 bar	(4060 psi)
Tank pressure, static:	max. 20 bar	(290 psi)

Flow rates (recommended)

Pump connection	max. 170 l/min	(44.9 US gpm)
Return from service port	max. 330 l/min*	(87.2 US gpm)

* Depending on choice of spool.

Internal pilot pressure

Fixed setting: 35 bar (508 psi) (applies to ESO and ESP spool actuators)

Leakage from service port over spool

From A or B port: max. 12 cm^3/min (0.73 in^3/min) at 100 bar (1450 psi), oil temperature 50 °C (122 °F) and viscosity 30 mm^2/s (cSt).

Connections

All standard connections are available in two versions (unless stated otherwise): G version (BSP pipe thread) for flat seal (type Tredo) according to ISO 228/1 and UNF version for O-ring seal according to SAE J1926/1.

The service ports are available in two different dimensions.

Connection	Location	G-version	UNF-version
P1	Inlet section	G1	1 5/16 - 12 UN-2B
P2	Inlet section	G3/4	1 1/16 - 12 UN-2B
T1	End section	G1	1 5/16 - 12 UN-2B
T2	Inlet section	G3/4	1 1/16 - 12 UN-2B
T3	End section	G3/4	1 1/16 - 12 UN-2B
Service ports	Spool section	G 3/4	1 1/16 - 12 UN-2B
Alternatively		G1	1 5/16 - 12 UN-2B
Spool actuators		G1/4	9/16 - 18 UNF-2B
Gauge ports		G1/4	9/16 - 18 UNF-2B

Weight

Valve with spool actuators type C/PC

No. of sections	Weight in kg	Weight in lb
1	19	41.9
2	27	59.5
3	35	77.2
4	43	94.8

Environmental Characteristics

While the H170CF can be mounted in any conceivable direction, care should be taken not to expose the spool-end on open spool actuators to heavy contamination. Moreover, the mounting base should be flat and stable, so that the valve is not subjected to stress. If the valve is mounted with the spool-actuator cap pointing downwards, then cap A11 should be chosen for spool actuators C and B3 [35]. The O-rings in the valve are of nitrile rubber.

Temperature

Oil temperature, working range +20 to 90 °C (68 to 194 °F)*

Filtration

Filtration must be arranged so that Target Contamination Class 20/18/14 according to ISO 4406 is not exceeded. For the pilot circuit, Target Contamination Class 18/16/13 according to ISO 4406 must not be exceeded.

Hydraulic fluids

Best performance is obtained using mineral-base oil of high quality and cleanness in the hydraulic system.

Hydraulic fluids of type HLP (DIN 51524), oil for automatic gearboxes Type A and engine oil type API CD can be used.

Viscosity, working range 15-380 mm^2/s**

Technical information in this catalogue is applicable at an oil viscosity of 30 mm^2/s and temperature of 50 °C using nitrile rubber seals.

* Product operating limits are broadly within the above range, but satisfactory operation within the specification may not be accomplished. Leakage and response will be affected when used at temperature extremes and it is up to the user to determine acceptability at these levels.

** Performance efficiency will be reduced if outside the ideal values. These extreme conditions must be evaluated by the user to establish suitability of the products performance.

Pressure drop

Δp (bar) Pressure drop, P to T (all spools in neutral position)

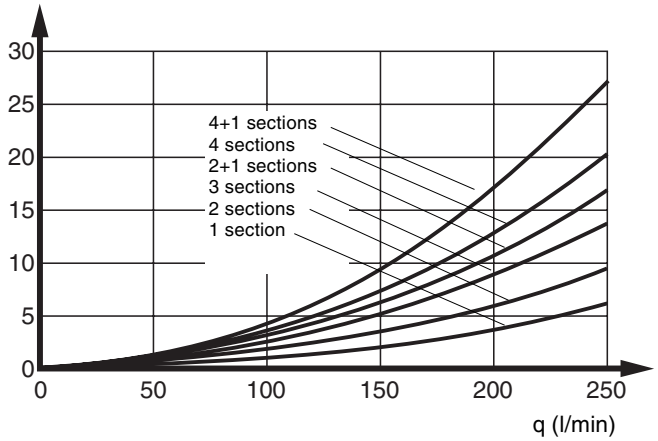

See also graph with unloading function, page 11.

Δp (bar) Pressure drop, P to service port-A/B (spool for nominal flow of 140 l/min)

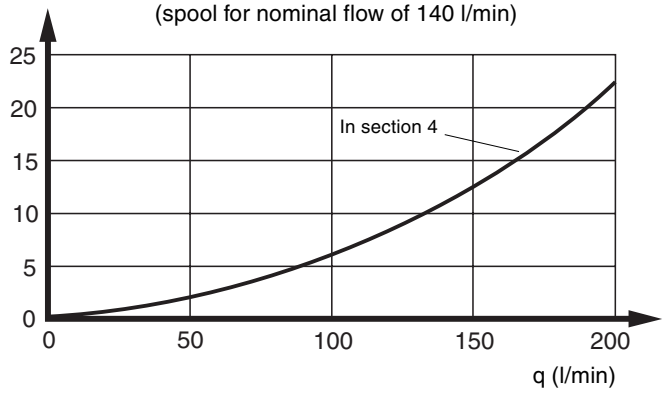

Δp (bar) Pressure drop, service port A/B to T

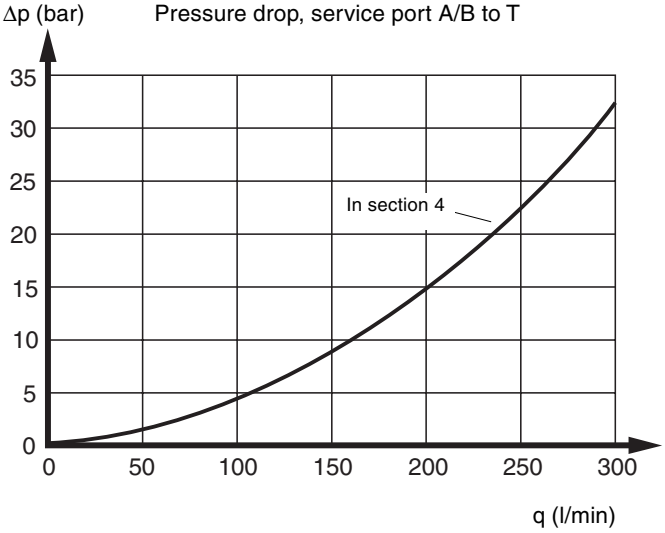

Hydraulic circuit diagram for basic functions

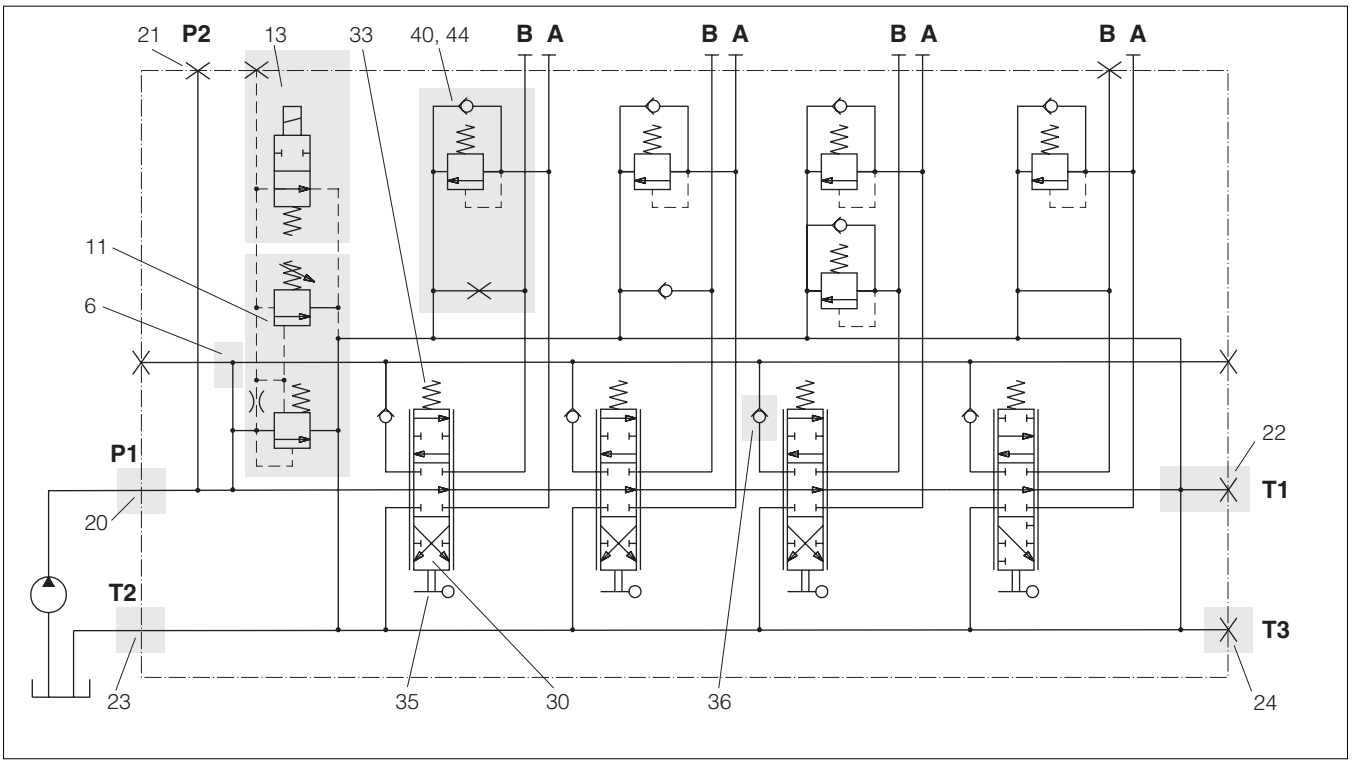

Diagram shows one H170CF with four spool sections.

The item numbers in the hydraulic circuit diagram above and in the columns below refer to different function areas for which different options can be selected. The valve above is equipped according to the description below. For other options, see under respective function areas [item numbers] further on in this booklet.

Item	Code	Description
2	4	Valve with 4 spool sections.
5	S	Separate valve. Not to be flanged to another valve.
6	XC	Without common load-hold check valve.
11	PB	Valve equipped with pilot-operated, adjustable main pressure relief valve, which is factory sealed.
13	EU24	Valve equipped with electrically controlled unloading function to reduce pressure drop when spools in neutral position.
20	P1	Pump connected to port P1.
21	P2B	Port P2 plugged.
22	T1B	Tank connection T1 plugged. Free-flow gallery connected with tank.
23	T2	Tank connected with port T2.
24	T3B	Port T3 plugged.
30	D	Spool for double-acting function in sections 1, 2 and 3.
	EA	Section 4 contains spool for single-acting function working off service port A. Service port B blocked.

Item	Code	Description
33	C	Manually operated spool actuator with spring centring to neutral position on all sections.
35	LM	Lever bracket fitted on all sections. The levers themselves are not delivered with the valve.
36	NS	Load-hold check valve in all sections to ensure that undesirable load sinking can not occur.
40	PA	Combined port-relief and anti-cavitation valve in service port A on all sections.
44	Y	Connection service port B to tank gallery blocked in section 1.
	N	Anti-cavitation valve fitted in service port B on section 2.
	PA	Combined port-relief and anti-cavitation valve in service port B on section 3.
	X1	Connection service port B to tank gallery open in section 4 (always the case with EA spool).

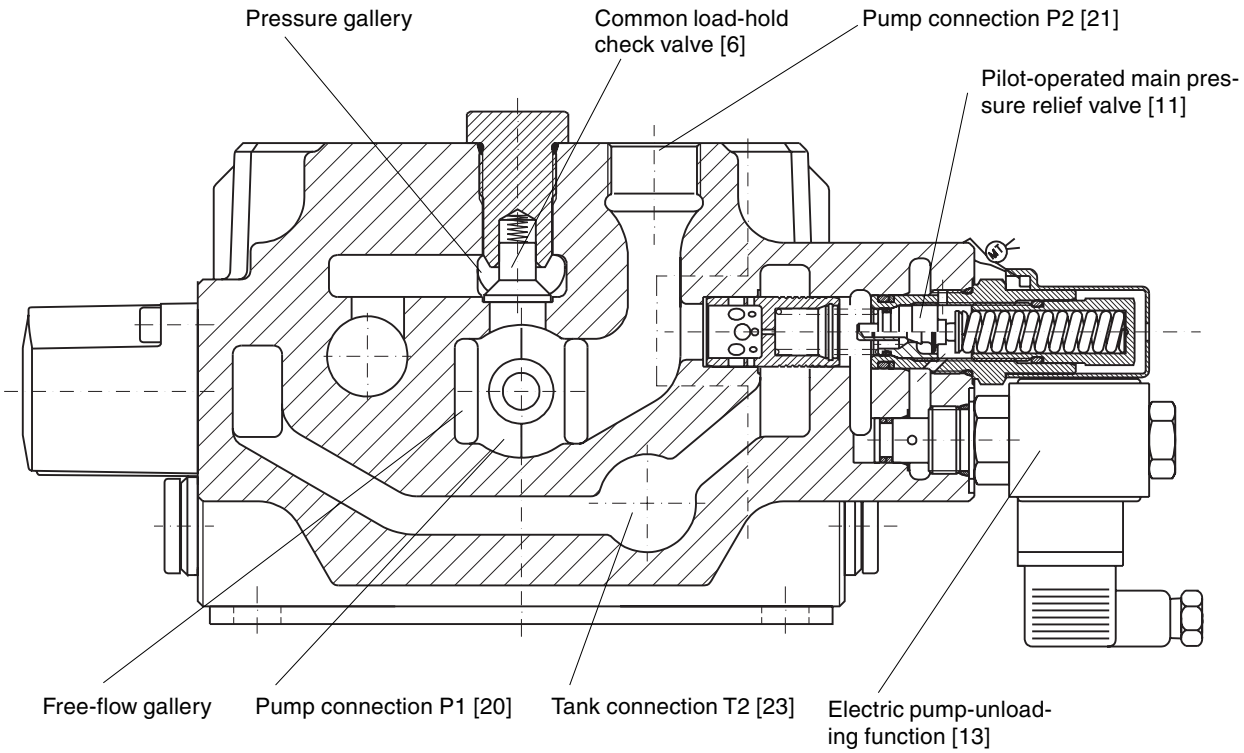

Even though the valve is of the monoblock type, it is divided into different function sections: the inlet section, one to four spool sections and the end section.

The inlet section contains the pilot-operated main pressure relief valve, the pump unloading function, a common load-hold check valve, pump and tank connections, and various nipples and plugs that are used when several valve blocks are flanged together. (See section entitled “System and valve construction” on page 14.)

Common load-hold check valve [6]

The H170CF can be equipped with a common load-hold check valve that prevents oil in the pressure gallery from flowing back to the free-flow gallery. It can be a substitute for individual load-hold check valves at each spool and is used where the simultaneous operation of different sections does not occur.

MC Load-hold check valve equipped with gauge port for measuring of pump pressure. Connection thread: G1/4.

NC Load-hold check valve to prevent undesirable sinking of the function. Common version.

XC Without load-hold check valve.

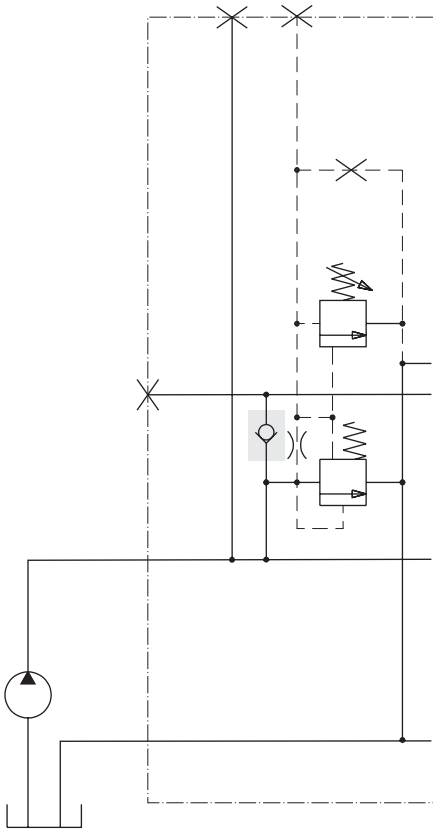

Inlet section with common load-hold check valve.

Main pressure relief valve [11, 12]

The main pressure relief valve is pilot operated and gives a very low pressure gradient with increasing flow. This low gradient and a rapid opening prevents the overloading of the pump or the machine.

The valve is continuously adjustable within: 100 - 250 bar.

Main pressure relief valve [11]

PS Adjustable main pressure relief valve. Delivered factory-set.

PB Adjustable main pressure relief valve. Delivered factory-set and sealed.

Y Without pressure relief valve.

Pressure setting [12]

The valve is delivered factory-set at the specified pressure. The setting is made with a flow of 20 l/min passing through the pressure relief valve.

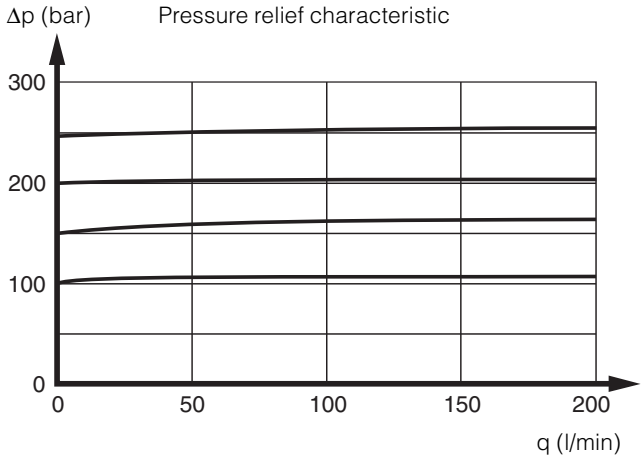

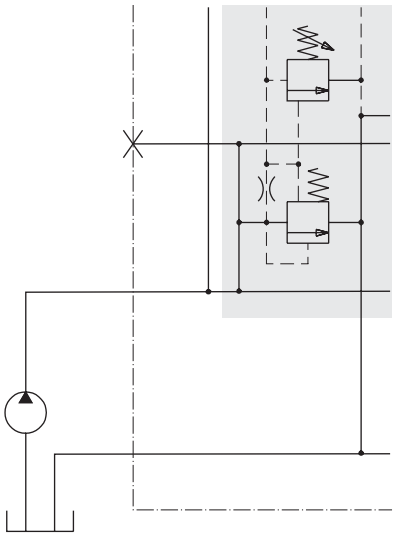

Inlet section with main pressure relief valve PS or PB.

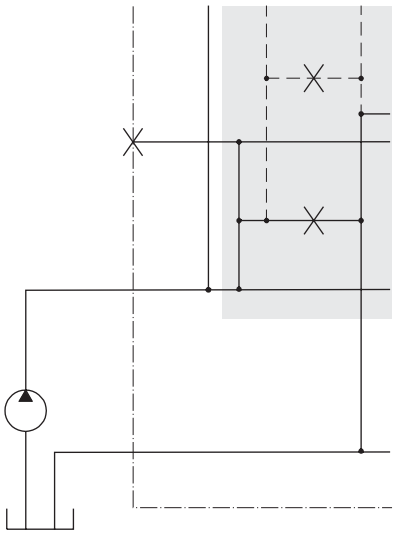

Inlet section without main pressure relief valve, PY.

Integrated pump unloading or multi-level main pressure relief valve [13]

The inlet section can be equipped with an electric or hydraulic remote-controlled pump unloading function. By combining this function with some kind of overcentre valve on each consumer, you can equip the machine with an emergency STOP function.

With the electric unloading function, the pilot signal to the main pressure relief valve is drained when the current is broken. This causes the main pressure relief valve to open and direct the pump flow back to tank. Note, however, that the valve's pressure gallery is not blocked.

Unloading can also be effected hydraulically by taking the signal out to valves in an external pilot circuit.

The unloading function gives a high degree of safety in that it prevents unintentional movements of the machine when in the unloaded state. Another benefit of the function is that it keeps energy losses low.

The unloading function can also be used to limit the maximum pressure for certain functions, thus avoiding situations where a function moving a light load runs to the end position and causes a high system-pressure build-up.

With an external pilot circuit connected to the UL-port of the main pressure relief valve, several pressure levels can be set. In this case, however, the external pilot pressure-relief valves should have lower settings than the internal one. If several pilot valves are used, each of them should be connected by means of a two-way valve. The use of several pressure levels increases the service life of the system.

EU12 Electric unloading function for 12 V system.

EU24 Electric unloading function for 24 V system.

UL Nipple for take-off of pilot signal to external pilot circuit for pump unloading or multi-level main pressure relief valve.

ULB Without unloading function.

See overleaf for diagrammatic example.

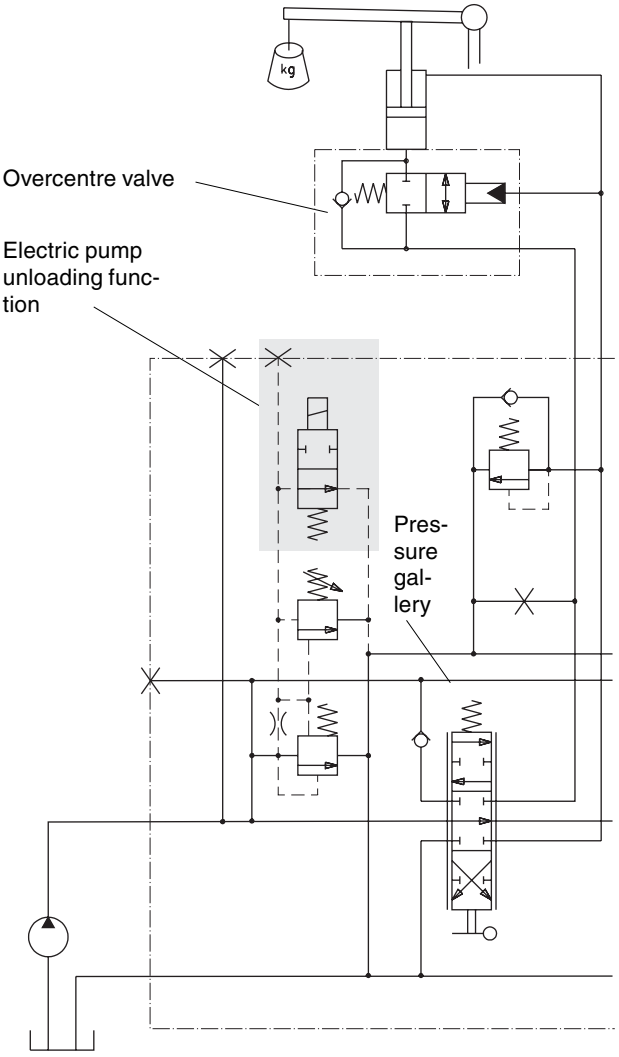

Connection example that gives emergency STOP function

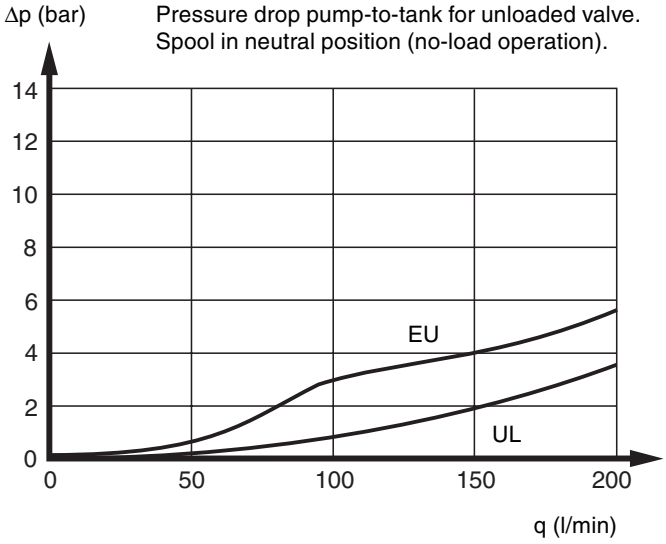

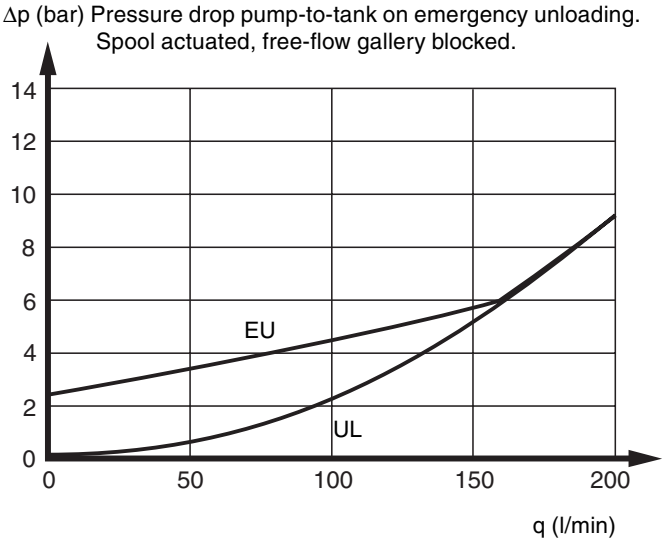

Pump connection P1 [20]

P1 Pump connection P1 open. Normal version.

P1B Pump connection P1 plugged.

Pump connection P2 [21]

P2 Pump connection P2 open.

P2B Pump connection P2 plugged. Normal version.

Tank connection T2 [23]

T2 Tank connection T2 open.

T2B Tank connection T2 plugged. Normal version.

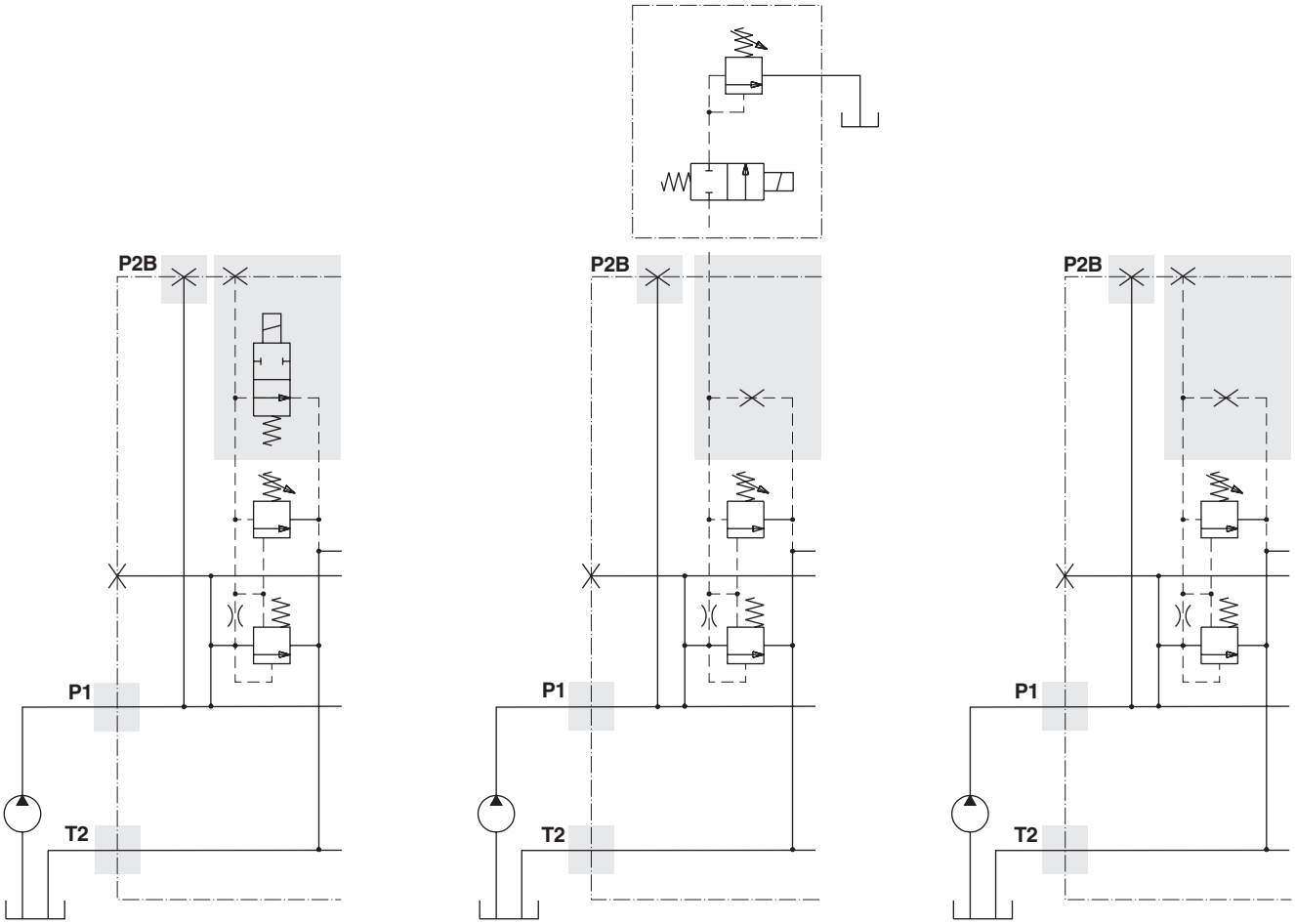

Inlet equipped with EU12/EU24 electric pump unloading. Energising the solenoid closes the unloading valve.

Inlet fitted with UL nipple and an external pilot circuit. The external pilot circuit contains a valve that opens a connection to a pressure relief valve on receipt of a signal. The setting on this pressure relief valve should be lower than the setting on the main pressure relief valve that is built into the directional valve. In this way, a two-level pressure relief function is obtained.

Inlet without unloading function (code ULB).

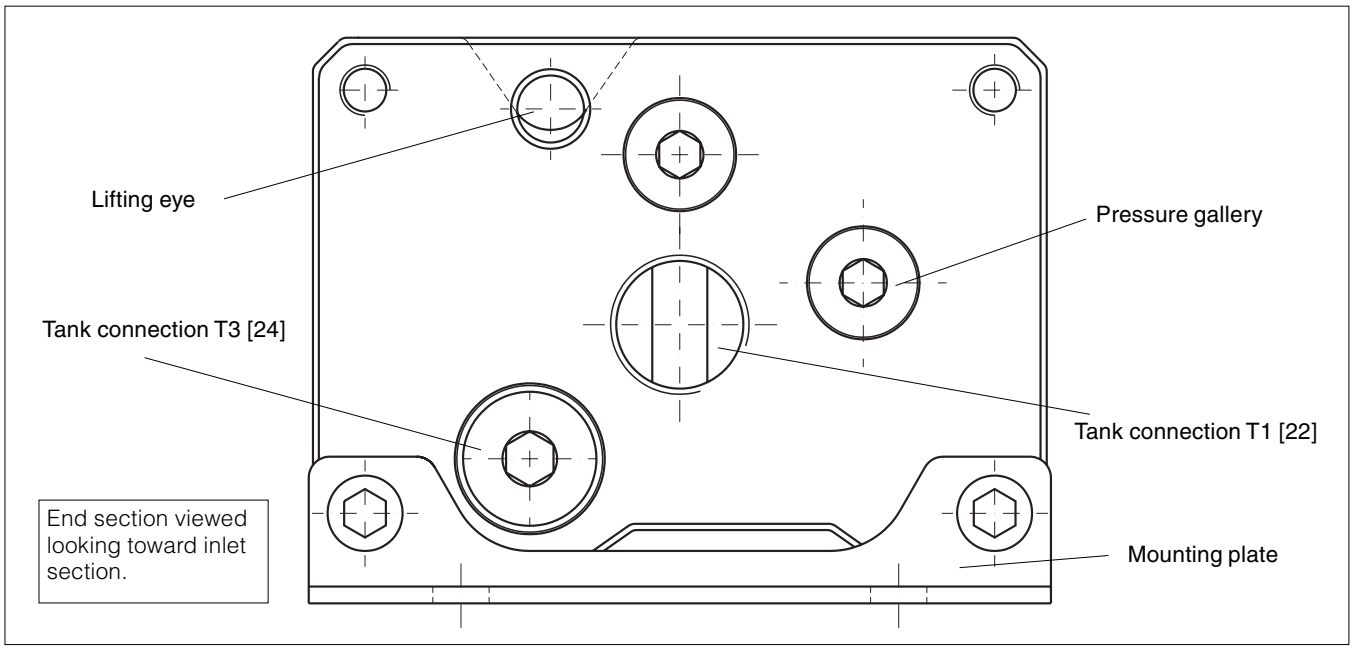

The end section contains the tank connections T1 [22] and T3 [24], as well as various nipples and plugs that are used when several valve blocks are flanged together. (See section entitled “System and valve construction” on page 14.)

Counter pressure valve/Tank connection T1 [22]

T1 Tank connection T1 open. Normal version.

T1B Tank connection T1 plugged.

PT1 Adjustable counter pressure valve. Raises pressure in free-flow gallery. Setting range: 4-8 bar.

Supplied factory-set at 6 bar. Setting made at q = 20 l/min.

PT2 Adjustable counter pressure valve. Raises pressure in free-flow gallery. Setting range: 8-12 bar.

Supplied factory-set at 10 bar. Setting made at q = 20 l/min.

Tank connection T2 [23] or T3 [24] must be open. PT2 is used, e.g. to raise the no-load pressure-drop through the free-flow gallery when a reducing valve is fitted in the same pump circuit as the directional valve. Purpose is to generate sufficiently high breakaway pressure for pilot-operated spool actuators.

S Series-connection nipple used to block connection between free-flow gallery and tank and instead direct pump flow onto a subsequent valve via T1 connection. The T2 or T3 port must be connected to tank when the S-nipple is used.

Tank connection T3 [24]

T3 Tank connection T3 open. Normal version.

T3B Tank connection T3 plugged.

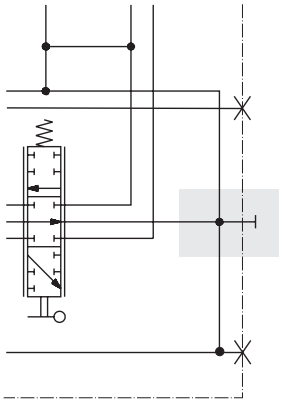

Tank connection T1 open (T1). Free-flow gallery connected with tank.

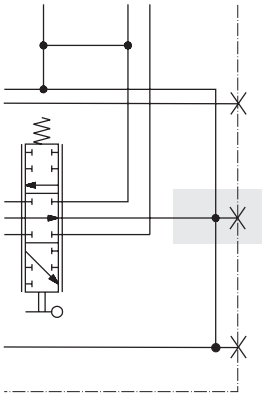

Tank connection T1 blocked (T1B). Free-flow gallery connected with tank.

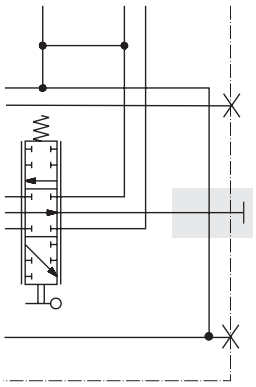

Tank connection T1 fitted with S-nipple. Free-flow gallery not connected with tank.

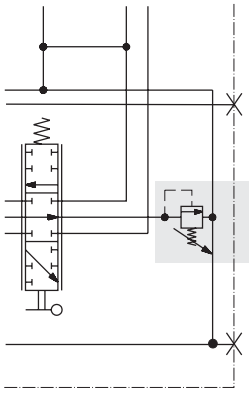

Tank connection T1 fitted with counter pressure valve (PT1, PT2). Free-flow gallery connected with tank via counter pressure valve.

System and valve construction

The H170CF is designed in such a way that the valve blocks can be flanged together in a simple way to form larger units. In addition to conventional series connection, the parallel connection of two or more blocks is possible. The blocks can be flanged directly to each other, or connected by means of pipes or hoses.

If you wish to convert stand-alone H170CF valves to ones that can be flanged together, please contact Parker for advice on conversion kits.

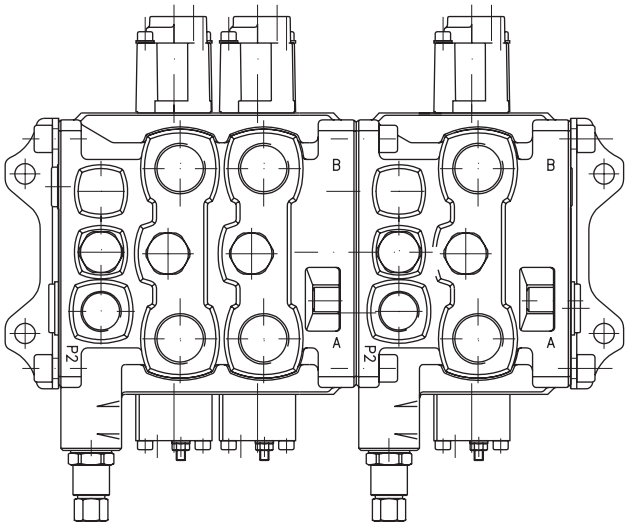

Flangeability in case of single-pump operation

Series connection

In series connection, each block has its own pressure gallery. This means that the block or blocks nearest the pump have priority over subsequent blocks. For instance, when a spool in the block nearest the pump is actuated, the next block has access only to the residual flow that passes through the free-flow gallery. In the event of full actuation of the spool, flow to subsequent blocks is blocked.

C1F: Valves delivered flanged together.

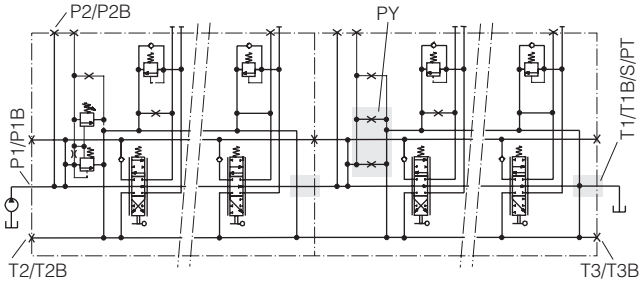

C1R: Valves delivered separately, but prepared for series connection by means of hoses or pipes.

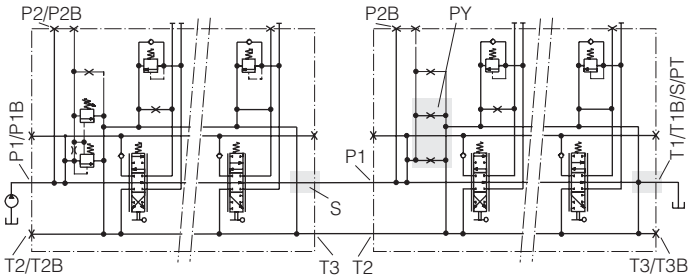

Parallel connection

In parallel connection, the pressure galleries are connected between the different blocks. In terms of function therefore, the different blocks act as one valve block.

C2F: Valves delivered flanged together.

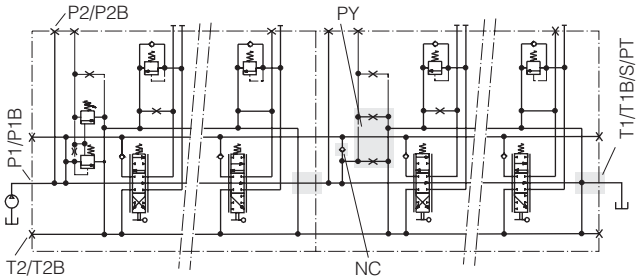

C2R: Valves delivered separately, but prepared for parallel connection by means of hoses or pipes.

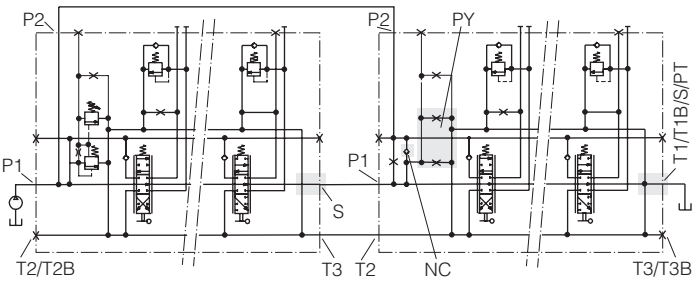

Flangeability in case of multi-pump operation

HC170CF valves can also be flanged together for systems with more pumps. Each block can have its own pump and the circuits can be completely separate or can work together in different ways.

Series connection

Each of the blocks in the example is fed by its own pump. The flow from pump 2 feeds the spool sections in block 2 only, where all sections are fed in parallel. A check valve stops the flow from pump 2 from flowing into the preceding block. The flow from pump 1 is used in the same way in block 1, but can also be used by subsequent blocks in precisely the same way as described for series connection with single-pump operation, C1F, on the preceding page.

C3F: Valves delivered flanged together.

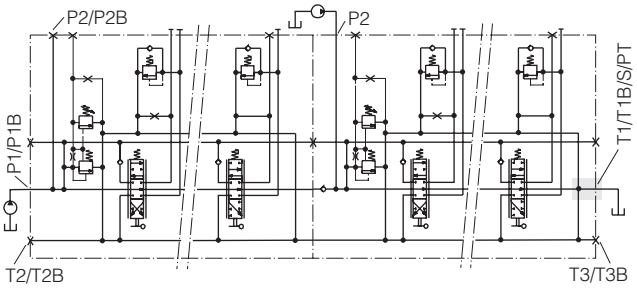

C3R: Valves delivered separately, but prepared for series connection by means of hoses or pipes.

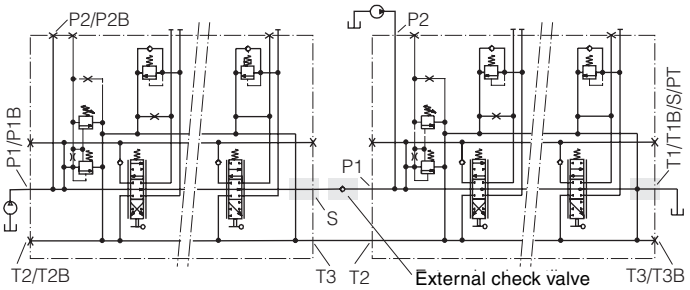

Parallel connection

Each of the blocks in the example is fed by its own pump. The flow from pump 2 feeds the spool sections in block 2 only, where all sections are fed in parallel. The flow from pump 1 is used in the same way in block 1, but can also be used in subsequent blocks without limitation, since the pressure galleries are connected between the blocks.

C4F: Valves delivered flanged together.

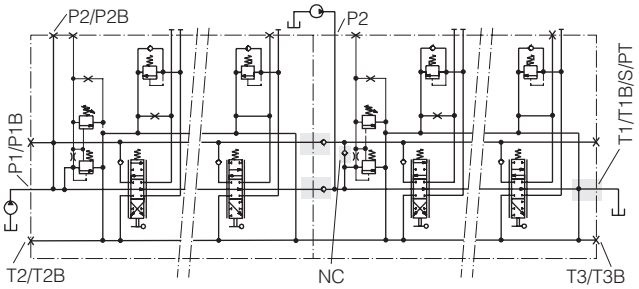

C4R: Valves delivered separately, but prepared for parallel connection by means of hoses or pipes.

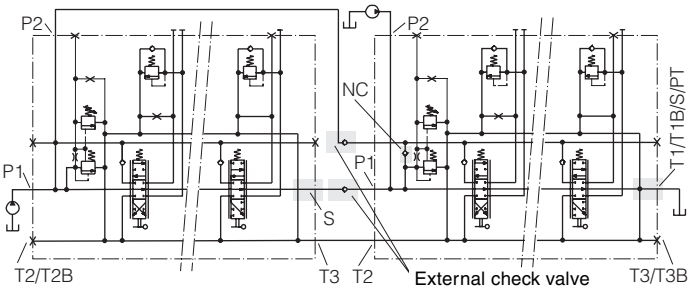

Separate pumps

Each of the blocks in the example is fed by its own pump and is not influenced by any of the other blocks. The circuits are completely separate, with the exception of the tank gallery.

C5F: Valves delivered flanged together.

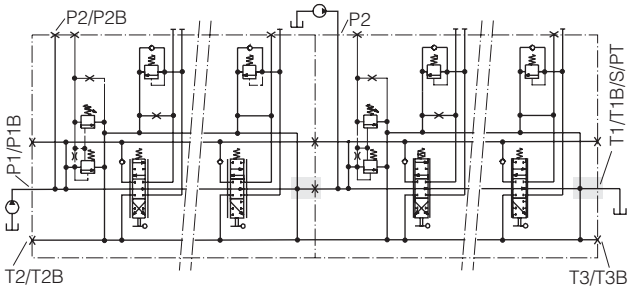

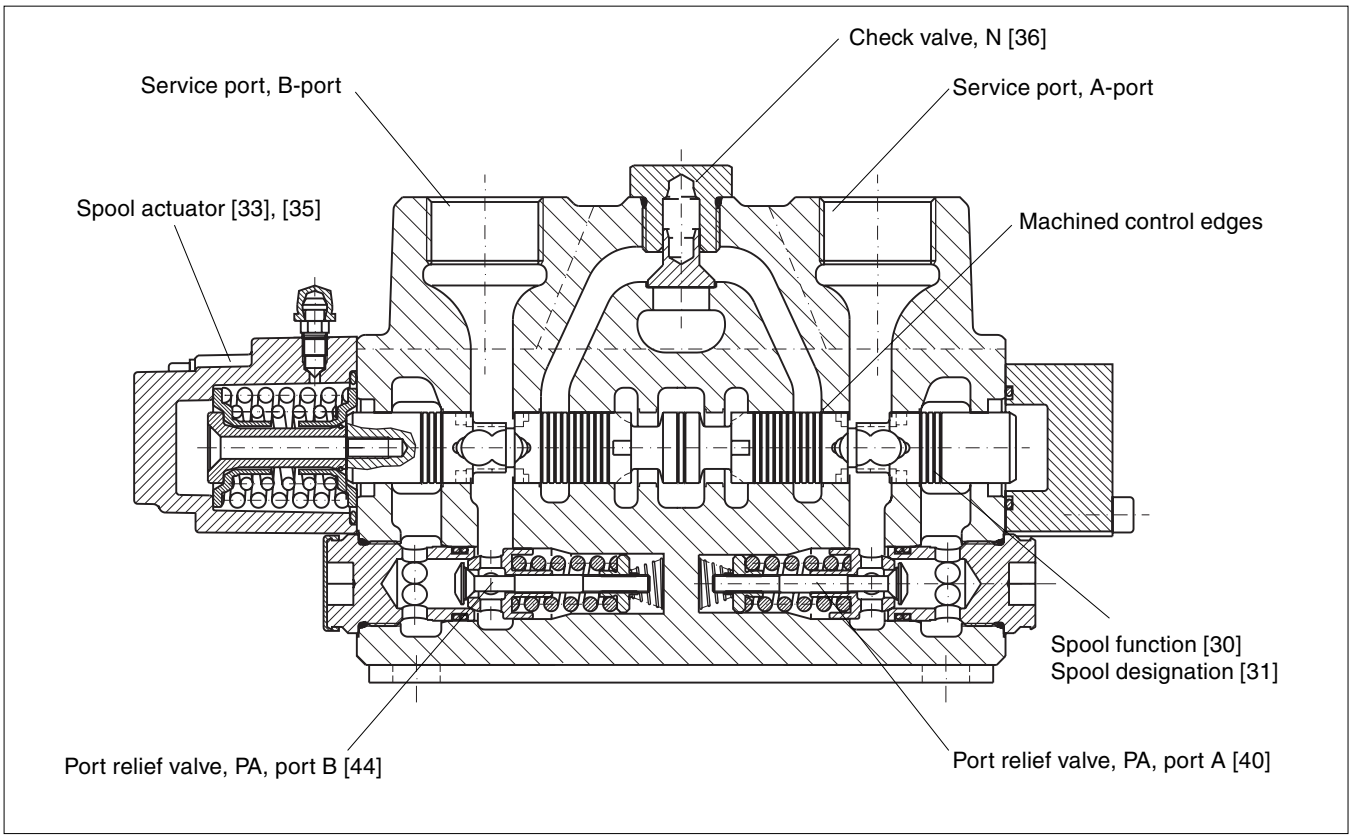

The H170CF is a monoblock valve that can be supplied with one to four spool sections. Each spool section can be equipped individually with many optional functions, as well as different kinds of spool and spool actuator, so that it may be customized optimally to suit the application and controlled function.

Choice of Spool

The spool is the most important link between the actions of the operator and the movement of the controlled function. Parker Hydraulics therefore goes to great lengths to optimize spools for different flows, load conditions, functions and applications. Since this is a continuous development process, new spools are being introduced all the time. For this reason, the many different spools available are not detailed in this catalogue. For assistance with the choice of spool therefore, please contact your nearest Parker representative.

Spool function [30]

Spools are divided into different groups, depending on their basic function.

D Double-acting spool for, e.g. double-acting cylinder. A and B ports blocked in the neutral position.

EA Single-acting spool for, e.g. single-acting cylinder. A port blocked in the neutral position and service port B plugged.

EB Single-acting spool for, e.g. single-acting cylinder. B port blocked in the neutral position and service port A plugged.

M Double-acting spool for, e.g. hydraulic motor. Service ports connected with tank (float position) in neutral.

S Double-acting spool for double-acting function. S-spool is specially designed to handle light-load functions such as swing, slew, rotate, etc.

C Regenerative spool for rapid feeding of a cylinder, or for flow saving. The large side of the cylinder is connected to service port A.

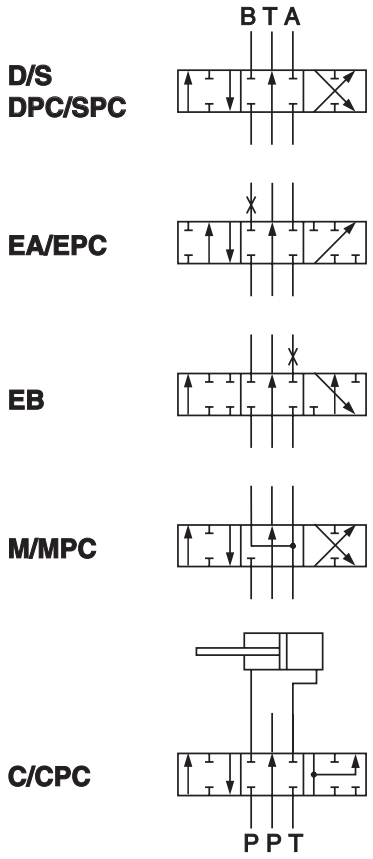

In addition to being divided into groups according to function, spools are also grouped according to whether the spool end is open or closed. Spools with closed spool end are used for PC or EHC spool actuators only, and have the letters PC as a suffix to the spool designation. “PC spools” are available in the following versions: DPC, EPC, MPC, SPC and CPC. Other spool actuators require spools with open spool end.

Spools with closed spool end are designed in such a way that the flow forces can be exploited to pressure-compensate the spool, i.e. when the load pressure or pump pressure changes, the flow to the service port remains almost unaffected. For further information, please see page 5.

Spool designation [31]

Each spool has an imprinted letter code to facilitate identification during tuning or servicing in the field.

Area relationship (cap) [32]

The area relationship, κ, for the section in question is calculated by dividing the cylinder area connected to service port B by the cylinder area connected to service port A. When the large side of the cylinder is connected to the A-port, the area relationship is less than 1. The area relationship for a motor is 1.

To obtain good control characteristics, the pressure drops over the spool’s meter-in and meter-out restrictions should be made equal to each other. Since the pressure drops are flow dependent and the cylinder area relationship κ directly affects the flow relationship between the restrictions, each spool is designed for a specific area relationship.

$$\kappa = \frac{\text{Cylinder area connected to B-port}}{\text{Cylinder area connected to A-port}}$$

Spool actuators [33]

A wide range of spool actuators has been developed for the H170CF. Spool actuators are divided into three groups: hand operated, ON/OFF remote controlled and proportional remote controlled.

Hand-operated spool actuators with open spool end

C Spring-centred spool actuator.

Stepless actuator with spring return to neutral position.

Spring force in neutral position	100 N
Spring force when spool fully actuated	115 N

B3 Three-position spool actuator.

The B3 actuator has 3 mechanically detented positions: neutral and fully actuated at either end position. The spool remains in the end positions and must be moved mechanically from one position to another.

Force needed on spool to overcome detent	approx. 220 N
Force between detent positions	max. 60 N

C+A11
B3+A11 Spool actuator C/B3 with special cap furnished with extra drainage holes.

C+A11 or B3+A11 are used when the valve is mounted in such a way that the cap of the spool actuator points downwards. In the standard cap, drainage is arranged towards the directional valve. The A11 version also has drainage holes in the bottom.

TPOL Spring-centred spool actuator for overload protection.

The TPOL actuator is of the stepless type with spring return to neutral. It is furnished with a connection to which a signal line from a load-limiting device can be connected. The signal forces the spool into neutral. For the spool to be actuated again, the moment of the dangerous load must be reduced.

On receipt of the overload signal, the TPOL actuator breaks the connection “pump to service port A”.

Connection thread: G1/4 or 9/16-18 UNF-2B.

DPOL Spring-centred spool actuator for overload protection.

The DPOL actuator functions in the same way as the TPOL, but breaks the connection “Pump to service port B” on receipt of the overload signal.

Connection thread: G1/4 or 9/16-18 UNF-2B.

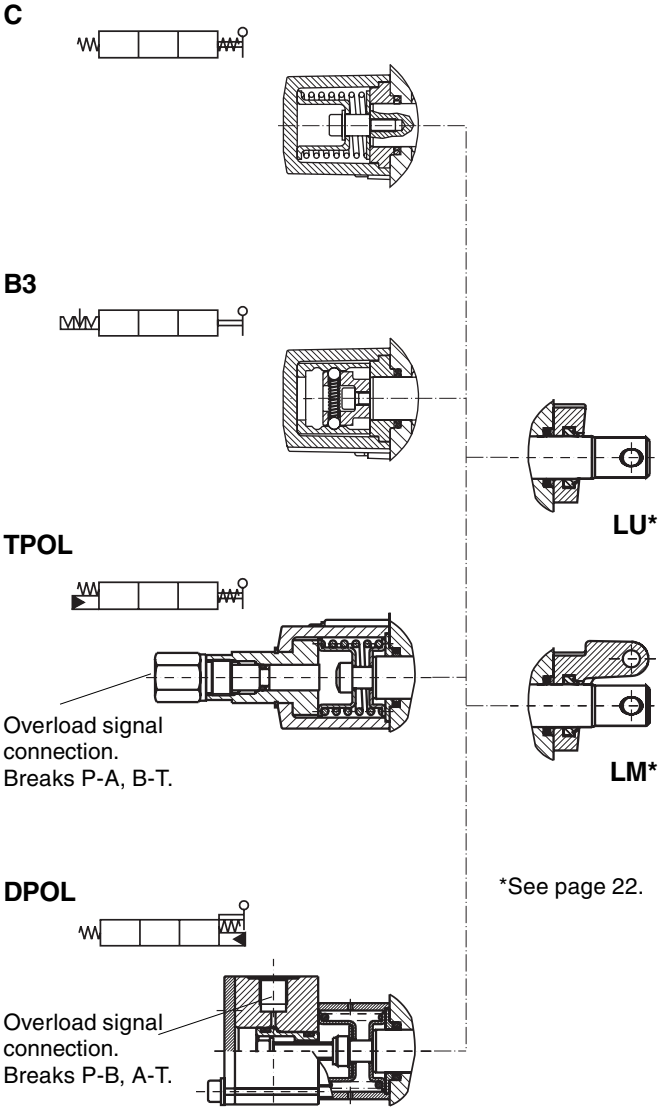

*See page 22.

Remote controlled ON/OFF spool actuators with open spool end and facility for operation by hand

AC2 Pneumatic ON/OFF spool actuator.

The AC2 is a pneumatically controlled ON/OFF spool actuator with spring centring and the possibility of stepless control by means of a lever.

Control pressure:	min. 4 bar max. 10 bar
Spring force in neutral position	165 N
Spring force when spool fully actuated	250 N

Connection thread: G1/8 or NPTF 1/8-27

ACE2 Electro-pneumatic ON/OFF spool actuator.

The ACE2 is an electro-pneumatically controlled ON/OFF spool actuator with spring centring and the possibility of stepless control by means of a lever.

Primary air:	4-10 bar
Control current:	(12 VDC) min. 0.85 A (24 VDC) min. 0.42 A
Voltage tolerance:	±20%
Spring force in neutral position	165 N
Spring force when spool fully actuated	250 N

Connection thread: G1/8 or NPTF 1/8-27

ACE2F Electro-pneumatic ON/OFF spool actuator.

The ACE2F is identical to the ACE2 except that it has a common pressure gallery for primary air. The primary air can be connected to either the last or the first valve section that is equipped with an ACE2F spool actuator.

Connection thread: G1/8 or NPTF 1/8-27

ESO Electro-hydraulic ON/OFF spool actuator.

The ESO is an electro-hydraulically controlled ON/OFF spool actuator with spring centring to neutral and the possibility of stepless control by means of a lever.

Ideally, remote control of the ESO spool actuator should be effected using a Parker electric remote-control system. (Please see separate brochure.)

The Parker QDC25 cartridge valve is used as the remote control valve.

Pump pressure:	min. 10 bar max. 35 bar
Tank pressure:	max. 15 bar
Control current:	(12 VDC) min 940 mA (24 VDC) min 475 mA
Voltage, 12 V systems:	max. 14 V, 100% ED max. 16 V, 50% ED
Voltage, 24 V systems:	max. 28 V, 100% ED max. 32 V, 50% ED
Coil resistance at +20 °C:	(12 V) 5.3 ohms (24 V) 21.2 ohms

Connection thread: G1/4 or 9/16-18 UNF-2B.

The connector is not supplied with the valve and must be ordered separately. Please see page 27.

See also page 23.

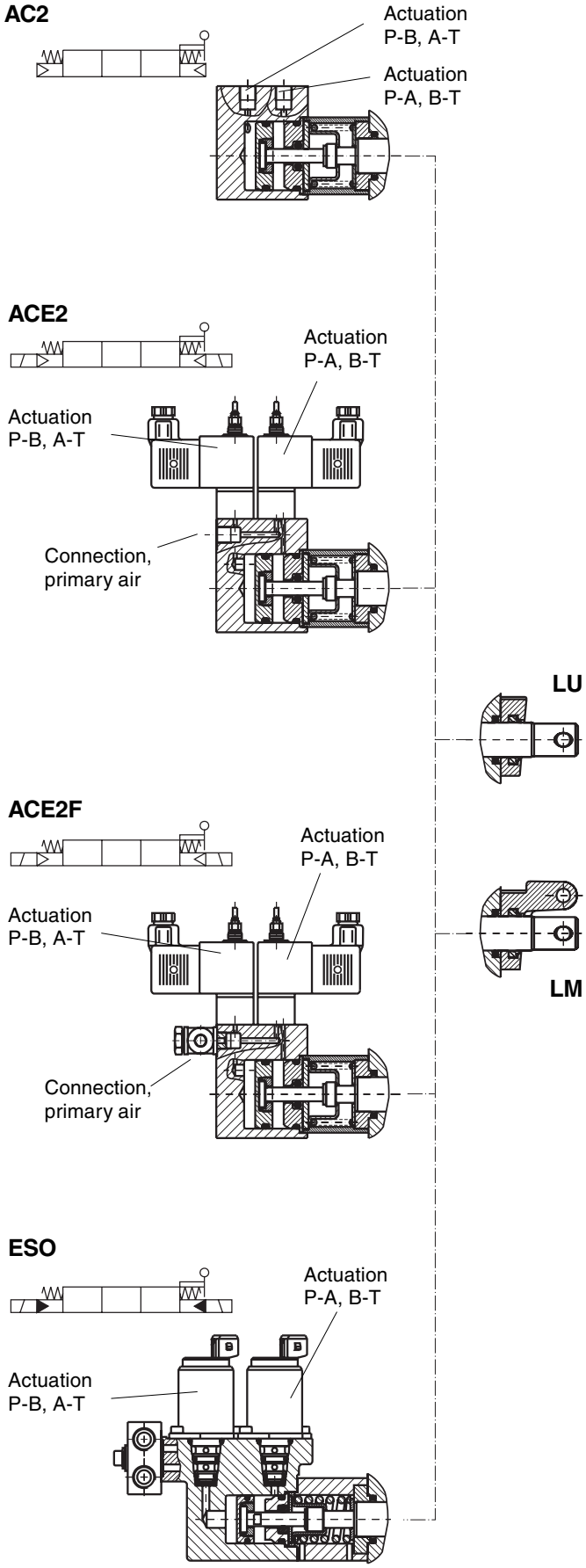

Remote controlled, proportional spool actuators with open spool end and facility for operation by hand

ACP2 Pneumatic proportional spool actuator.

The ACP2 is a pneumatically controlled, proportional spool actuator with spring centring and the possibility of stepless control by means of a lever. The ACP2 is best controlled by the Parker VPO4 remote control valve (see separate brochure).

Breakaway pressure:*	2.5 bar
Final pressure:*	min. 7 bar max. 10 bar
Spring force in neutral position	180 N
Spring force when spool fully actuated	610 N

Connection thread: G1/8 or NPTF 1/8-27

* See page 21.

ESP Electro-hydraulic proportional spool actuator.

The ESP is an electro-hydraulic, proportionally controlled spool actuator with spring centring and the possibility of stepless control by means of a lever. The Parker PVC25 cartridge valve is used as the pilot valve.

Ideally, remote control of the ESP spool actuator should be effected using a Parker electric remote-control system. See separate brochure.

Voltage	12 V	24 V
Breakaway current:*	max. 460 mA	max. 225 mA
Final current:*	min. 970 mA	min. 480 mA
Tank pressure:	max. 15 bar	max. 15 bar
Solenoid (PVC25):	max. 1450 mA 100% ED	max. 730 mA 100% ED
Coil resistance at +20 °C:	5.4 ohms	21.7 ohms
Inductance:	27.7 mH	7.0 mH

Connection thread: G1/4 or 9/16-18 UNF-2B.

A connector is not supplied with the valve and must be ordered separately. Please see page 27.

See also page 23.

* See page 21.

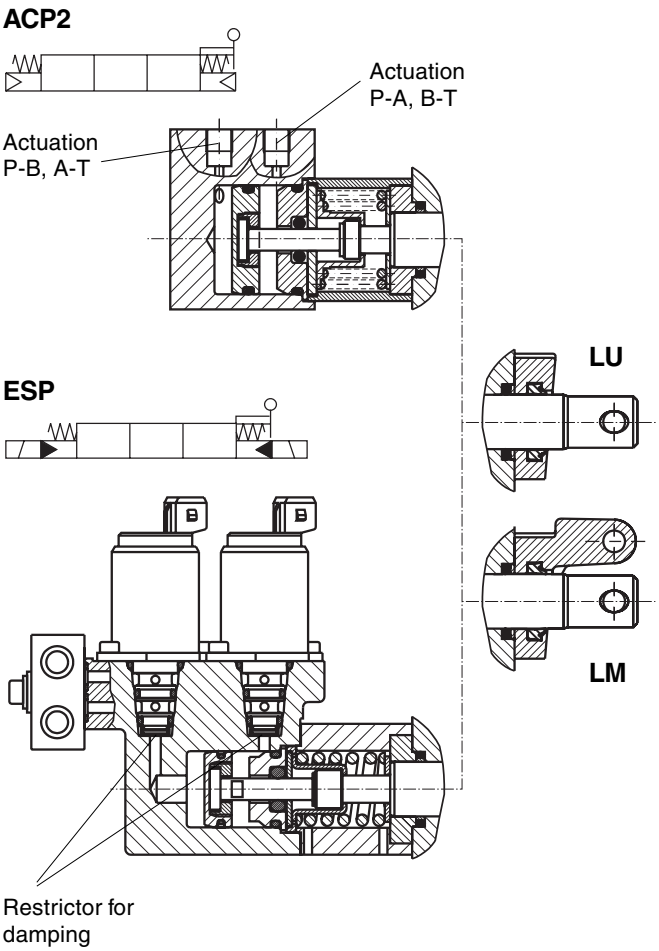

Remote controlled, proportional spool actuators with closed spool end

PC Hydraulic proportional spool actuator.

The PC is a hydraulically, proportionally controlled, spring-centred spool actuator intended to be controlled remotely by the Parker PCL4 remote control valve (see separate brochure).

Breakaway pressure:*	5.6 bar
Final pressure:*	20 bar (max. 50 bar)

Connection thread: G1/4 or 9/16-18 UNF-2B.

PCH The PCH spool actuator is identical to the PC unit, except that it is fitted with an enclosed lever.

Breakaway pressure:*	5.6 bar
Final pressure:*	20 bar

*****
The “breakaway pressure” and “breakaway current” refer to the pressure/current needed for the directional valve to open the connection “service port to tank”.

The “final pressure” and “final current” are the lowest pressure/current values needed to effect full actuation of a spool in the directional valve.

This data must be taken into consideration when choosing pilot valves, since the opening pressure/current of the pilot valve must be lower than the breakaway pressure/current of the spool actuator in order to avoid jerky starting and stopping.

However, the pilot valve’s final pressure/current must be higher than the final pressure/current of the directional valve in order to ensure that the spool can be fully actuated. This is important for the H170CF because, if the spool is not actuated fully, the free-flow gallery will not close, with the result that a certain amount of flow will go directly to tank. The foregoing is especially important if you limit the stroke length of the spool.

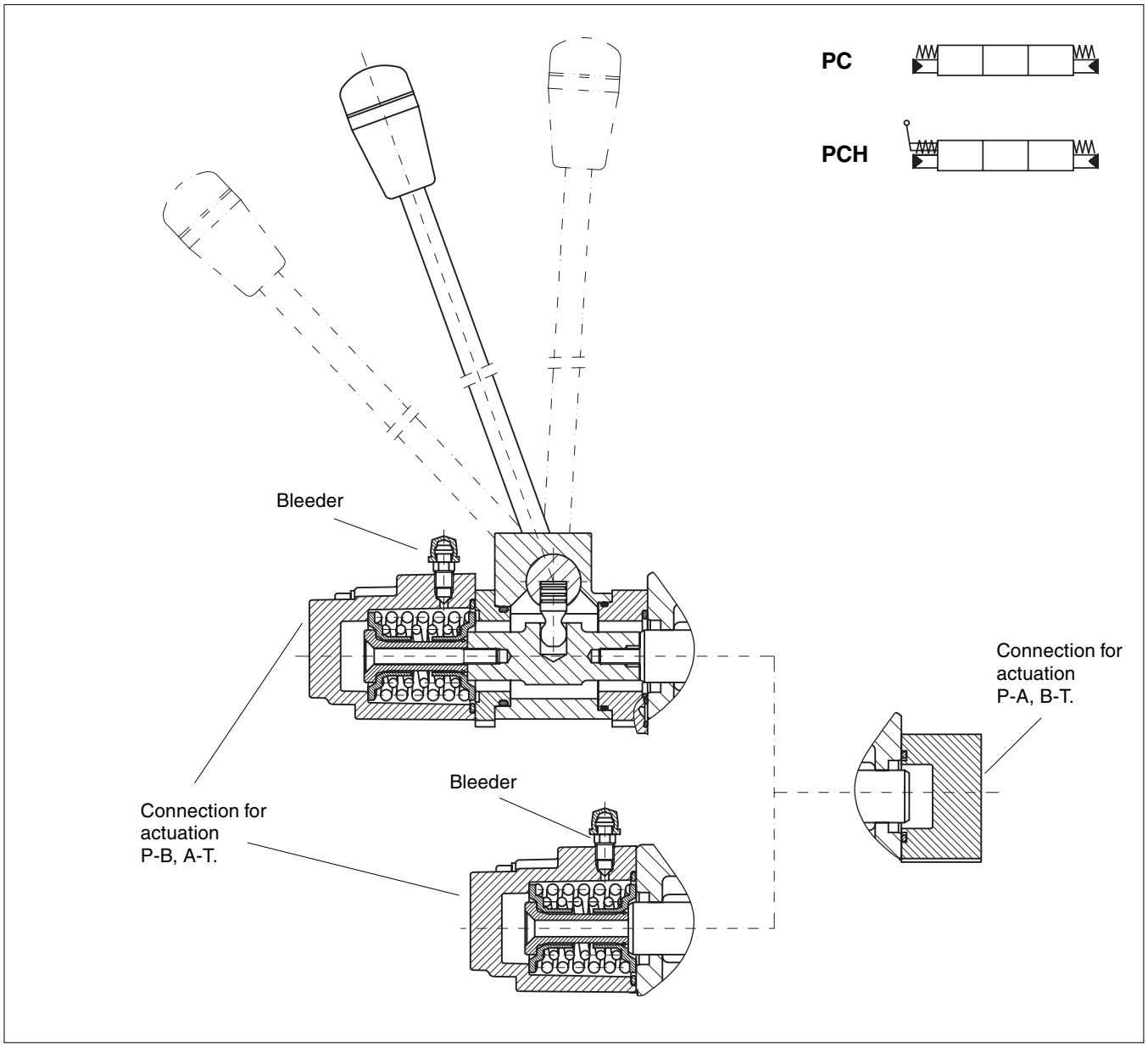

Lever bracket [35]

LM Bracket for lever fitted. Lever itself not supplied and must be ordered separately. See page 27.

LM+A04 Lever bracket LM turned through 180° so that same lever movement activates the opposite service port.

N.B. If LM and LM+A04 are mounted on the same valve, the levers will be of different heights.

LU No bracket for lever. Open spool end.

X No bracket for lever. Closed spool end. Always the case with PC and PCH spool actuators only.

LM

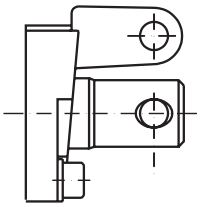

LM + A04

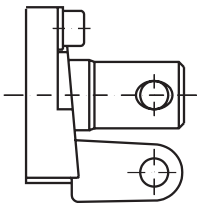

LU

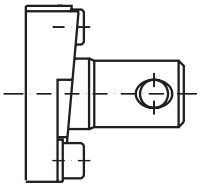

ESO and ESP spool actuators
[42A] [46A] [48] [49] [50] [51]

ESO and ESP spool actuators [33] are not just actuators for one section, but a package including accessories for several spool sections. Accessories include, e.g. integrated pilot-pressure reducing valve, connection plates and bleed-off restrictor for heating up the oil.

All connections: G1/4 or 9/16-18 UNF-2B.

Feed restrictor for ESO and ESP [42A] [46A]

To enable individual adaptation of the speed at which a function responds, a number of restrictors from 0.6 to 2.0 mm in diameter can be chosen. Normal version: 1.0 mm.

ESO or ESP spool actuator on one section only [48]

RB1 Reducing valve - see [51] - mounted on spool section and turned *toward* the inlet section.

RB2 Reducing valve - see [51] - mounted on spool section and turned *away from* the inlet section.

RA1 Reducing valve - see [51] - mounted on spool section and turned *toward* the inlet section. The section also has connection threads for tank and external take-off of the reduced pump pressure. The connection threads are turned away from the inlet section.

RA2 Reducing valve - see [51] - mounted on spool section and turned *away from* the inlet section. The section also has connection threads for tank and external take-off of the reduced pump pressure. The connection threads are turned toward the inlet section.

G1 Threaded connection port on spool section for connection of pump and tank. Turned *toward* inlet section. Max. pump pressure: 35 bar.

G2 Threaded connection port on spool section for connection of pump and tank. Turned *away from* inlet section. Max. pump pressure: 35 bar.

GS1 Threaded connection port on spool section for connection of pump and tank. Turned *toward* inlet section. Max. pump pressure: 35 bar. The threaded connection contains a bleed-off restrictor (Ø1.2 mm) between the pump and tank, so that a flow (for heating up the oil) will always circulate to tank.

GS2 Threaded connection port on spool section for connection of pump and tank. Turned *away from* inlet section. Max. pump pressure: 35 bar. The threaded connection contains a bleed-off restrictor (Ø1.2 mm) between the pump and tank, so that a flow (for heating up the oil) will always circulate to tank.

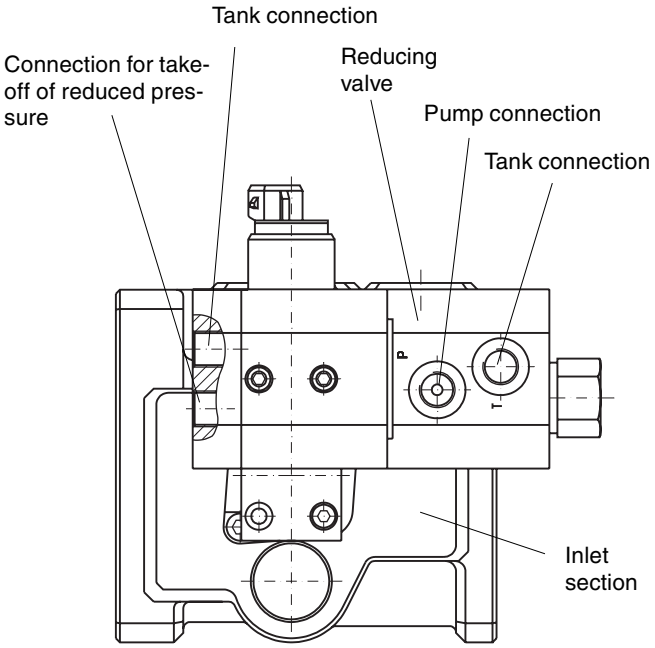

ESO/ESP on one spool section. Reducing valve fitted. Threaded connections for external take-off of reduced pressure, RA1 [48].

ESO or ESP spool actuators on more than one spool section. Section nearest the inlet [49]

R Reducing valve fitted. See [51].

G Threaded connection port. Max. 35 bar pump pressure.

S No connection or reducing valve.

SS Bleed-off restrictor (Ø1.2 mm) between pump and tank for continuous circulation of warm-up flow to tank.

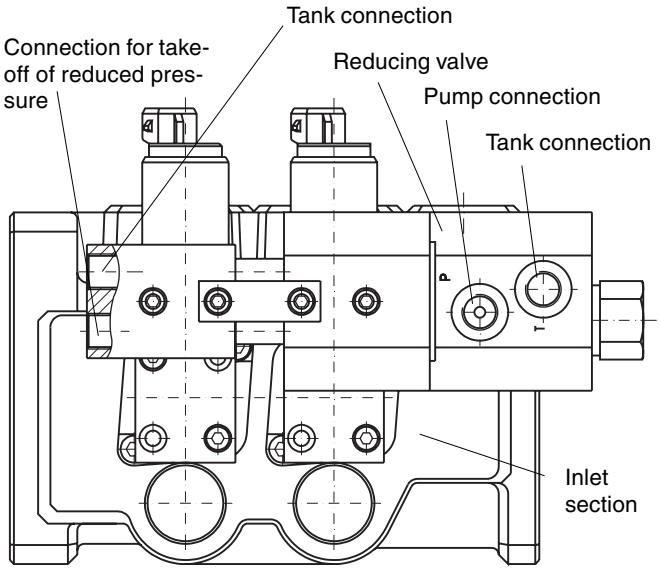

ESO/ESP on more than one spool section. Reducing valve R [49] fitted. Threaded connection port G [50] for external take-off of reduced pressure.

ESO or ESP spool actuators on more than one spool section. Section furthest from the inlet [50]

R Reducing valve fitted. See [51].

G Threaded connection port. Max. 35 bar pump pressure.

S No connection or reducing valve.

SS Bleed-off restrictor (Ø1.2 mm) between pump and tank for continuous circulation of warm-up flow to tank.

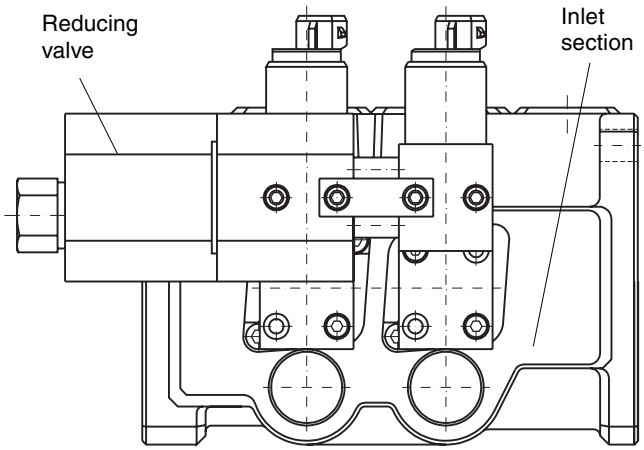

ESO/ESP on more than one spool section. No connection S [49]. Reducing valve R for item [50]. With R as item [50], reducing valve's pump and tank connection are turned in toward the directional valve.

Reducing valve for ESO and ESP spool actuators [51]

35 Reducing valve fitted (for R, RB1, RB2, RA1 or RA2 above). Setting: 35 bar at flow of 0 l/min. Max. pressure in pump connection: 250 bar.

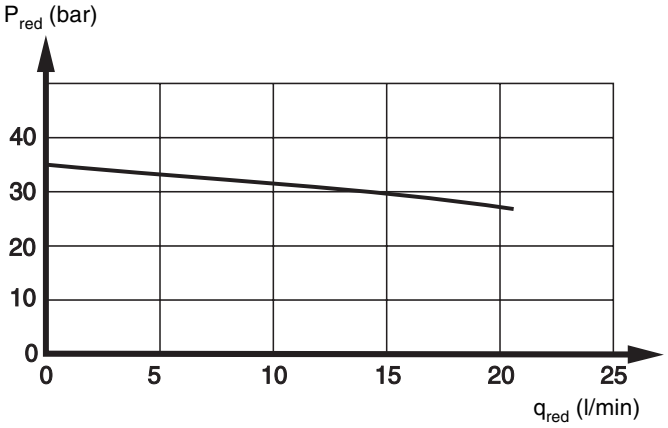

P_{red} = reduced pressure
q_{red} = take-off flow from reducing valve

Options in the spool sections

Accessories in the pressure gallery [36]

The spool-section pressure gallery can be fitted with different accessories to give the best system construction.

XS Without load-hold check valve.

NS Load-hold check valve to prevent undesirable load sinking. Normal version.

The load-hold check valve prevents oil from flowing back into the common pressure gallery.

In lifting movements where a heavy and a light load are lifted simultaneously, the heavy load is prevented from sinking, regardless of the pressure ruling in the common pressure gallery. The load-hold check valve also prevents a heavy load from sinking before sufficient pressure has been generated at the restriction in the free-flow gallery when a common load-hold check valve is not fitted.

MM Load-hold check valve equipped with gauge port for measuring of pump pressure. Connection: G1/4.

MS Load-hold check valve equipped with adjustment screw for restricting flow to consumer.

A16 Like MS but better resolution for adjustment range. Can only be used for limiting a pump flow of up to 40 l/min and pump pressure of max. 280 bar.

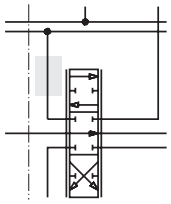

Pressure gallery open (XS)

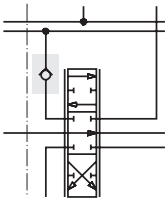

Check valve in pressure gallery (NS)

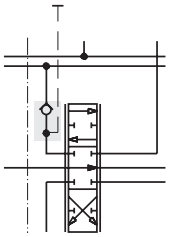

Check valve and gauge port in pressure gallery (MM)

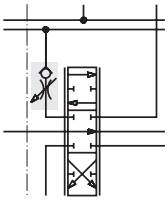

Adjustable restrictor and check valve in pressure gallery (MS or A16)

Pressure limiters in the service ports (port relief valves) [40] [41] [44] [45]

The service ports can be equipped with individual port-relief and/or anti-cavitation valves to protect the valve and consumers from pressure shocks and excessive system pressure.

The Parker PLC183 cartridge valve is used as a port relief valve. It is renowned for its long service life, good sealing, fast opening sequence and good characteristic over the entire flow range.

Port relief valve [40] and [44]

X1 No port relief valve fitted. Service port connected to valve's tank gallery.

X2 No port relief valve fitted. Service port connected to valve's tank gallery. Hole plugged with plastic plug. Specified when customer does not want factory-fitted port relief valve. Port relief valve or Y-plug to be fitted by customer.

Y No port-relief or anti-cavitation valve fitted. Connection between service port and tank gallery blocked.

PA Combined port-relief and anti-cavitation valve PLC183 fitted. Valve is factory-set.

N Only anti-cavitation valve fitted.

Pressure settings [41] and [45]

Optional standard settings:
50, 63, 70, 80, 100, 125, 140, 160, 175, 190, 210, 230, 250, 260 and 280 bar.

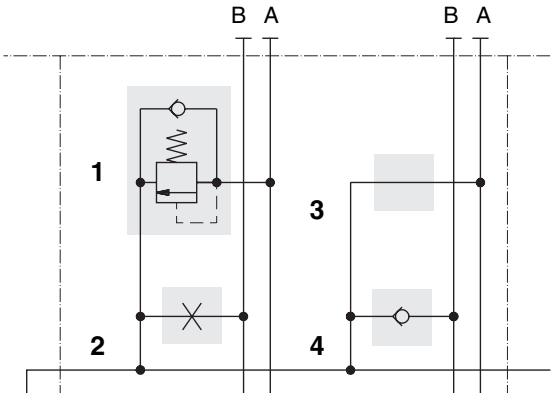

In the circuit diagram above, section 1, service port A, is equipped with a combined port-relief and anti-cavitation valve, PA (1), to limit the pressure and prevent cavitation. Section 1, service port B, is fitted with a Y-plug, Y (2), to block the connection to tank.

Section 2, service port A, is connected to tank, X1 (3), in the case of EB spools. Section 2, service port B, is fitted with an anti-cavitation valve, N (4).

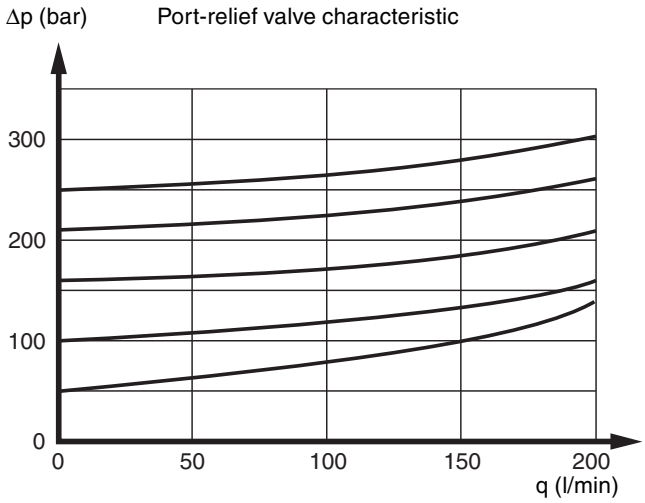

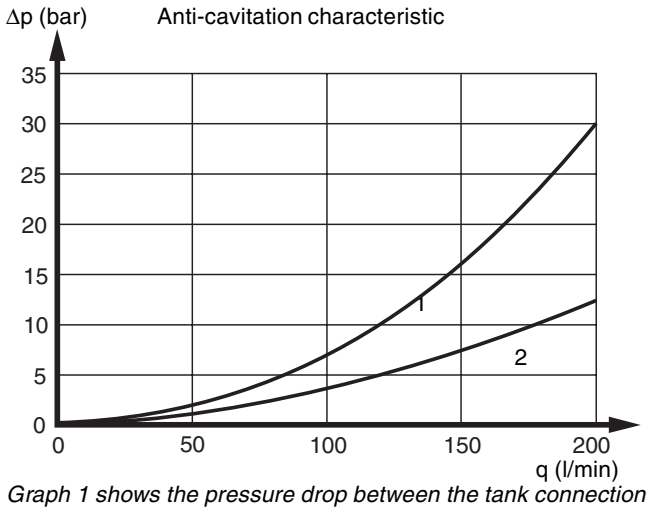

Graph 1 shows the pressure drop between the tank connection and service port when the port relief valve (PA) is used as an anti-cavitation valve.
Graph 2 shows the pressure drop between the tank connection and service port when the anti-cavitation valve (N) is used.

Function blocks

Function blocks (manifolds) can be flanged to the flange planes on the inlet and/or outlet sides of the H170CF. This enables total system solutions to be integrated into the valve.

In addition to the standard function blocks available, our experienced product and system designers can tailor function blocks to meet your needs exactly. For more information about total system solutions, please contact your Parker representative.

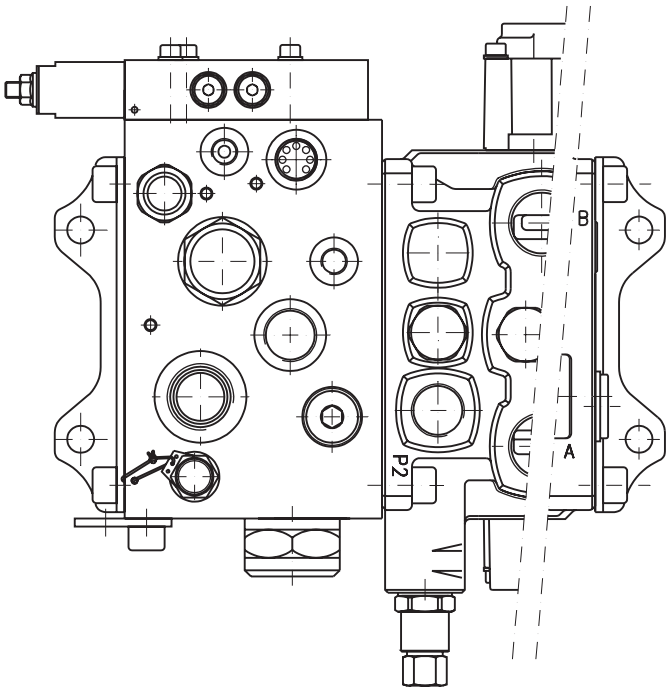

Above is an example of a specially customized function block. Like most function blocks, it was constructed using cartridge valves, i.e. only the housing is a unique component.

Levers

Levers are not supplied with the valve and must be ordered separately.

The standard levers for H170CF valves are of steel, which is surface treated to give resistance to corrosion. Lever knobs are of black plastic and available in either plain-ball or “window” versions. The window version lets you insert a function symbol beneath a transparent cap.

Levers are supplied complete with pin kits for mounting to the directional valve.

Lever:	Ordering No.
M9 (Window knob)	**9126 1809-01**
M92 (Ball)	**9126 2592-01**
M91 (Window knob)	**9126 2052-01**
M94 (Ball)	**9126 3860-55**

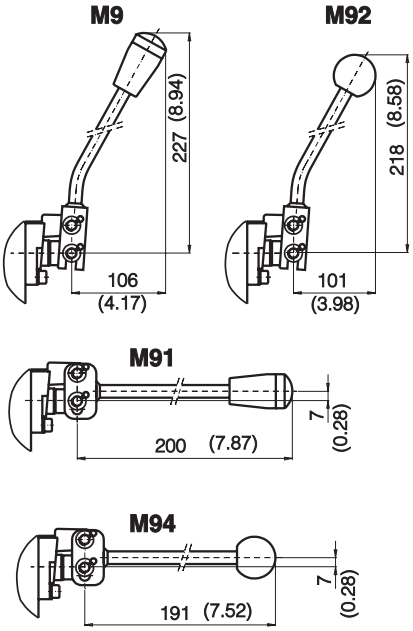

Connectors

Suitable connector for ACE2/ACE2F		**9125 9551**
Suitable connectors for ESO and ESP:		
AMP Junior-Timer type C, 963040-3		
eller Bosch 1 928 402 404.		
Complete assembly kits	1 off	**393000K822**
with plugs and seals can be	10 off	**393000K825**
ordered from Parker using the	50 off	**393000K826**
kit numbers opposite.	100 off	**393000K827**

C

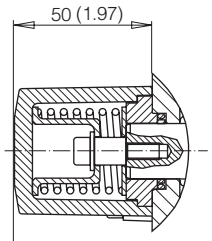

B3

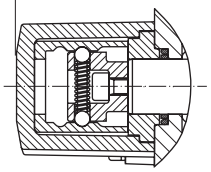

TPOL

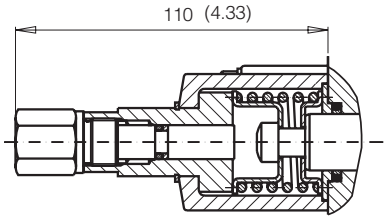

DPOL

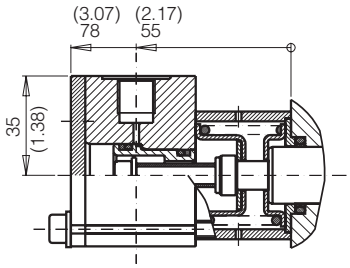

LU

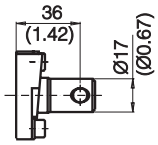

LM

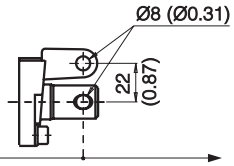

Opens pump to service port A. Spool stroke 8 mm (0.31).

Opens pump to service port B. Spool stroke 8 mm (0.31).

AC2
ACP2

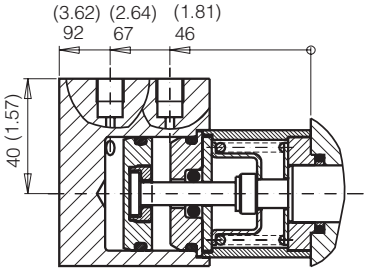

ACE2

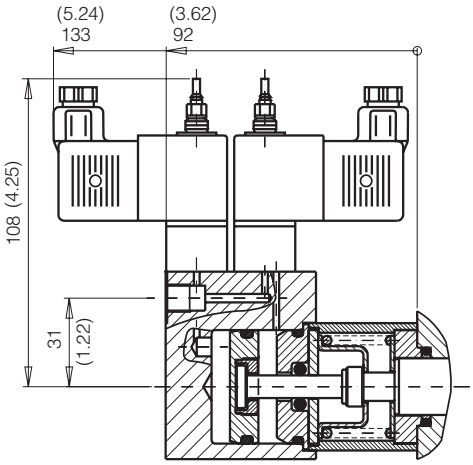

ACE2F

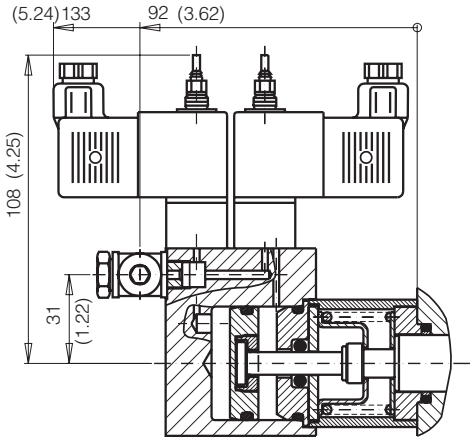

ESO
ESP

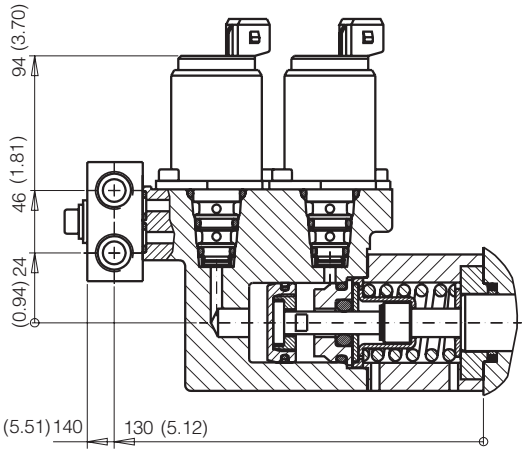

ESO
ESP

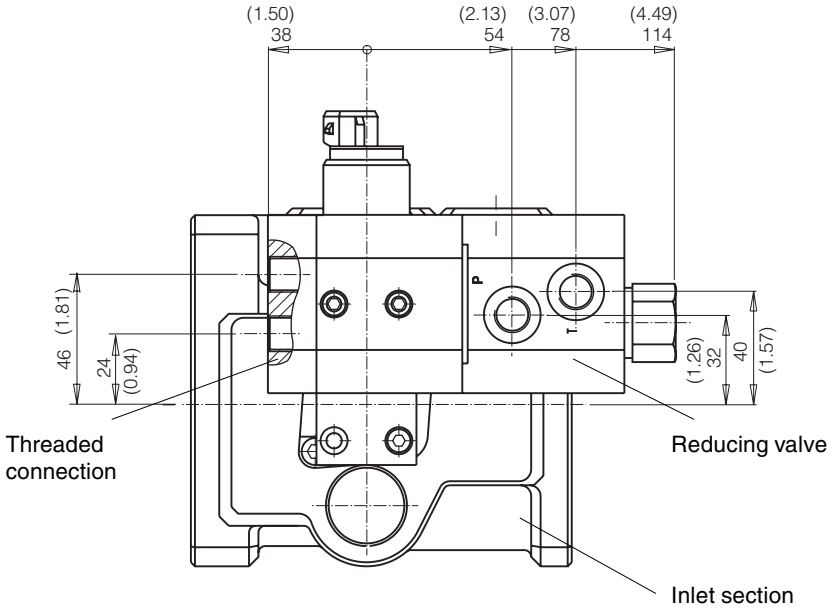

PC
PCH

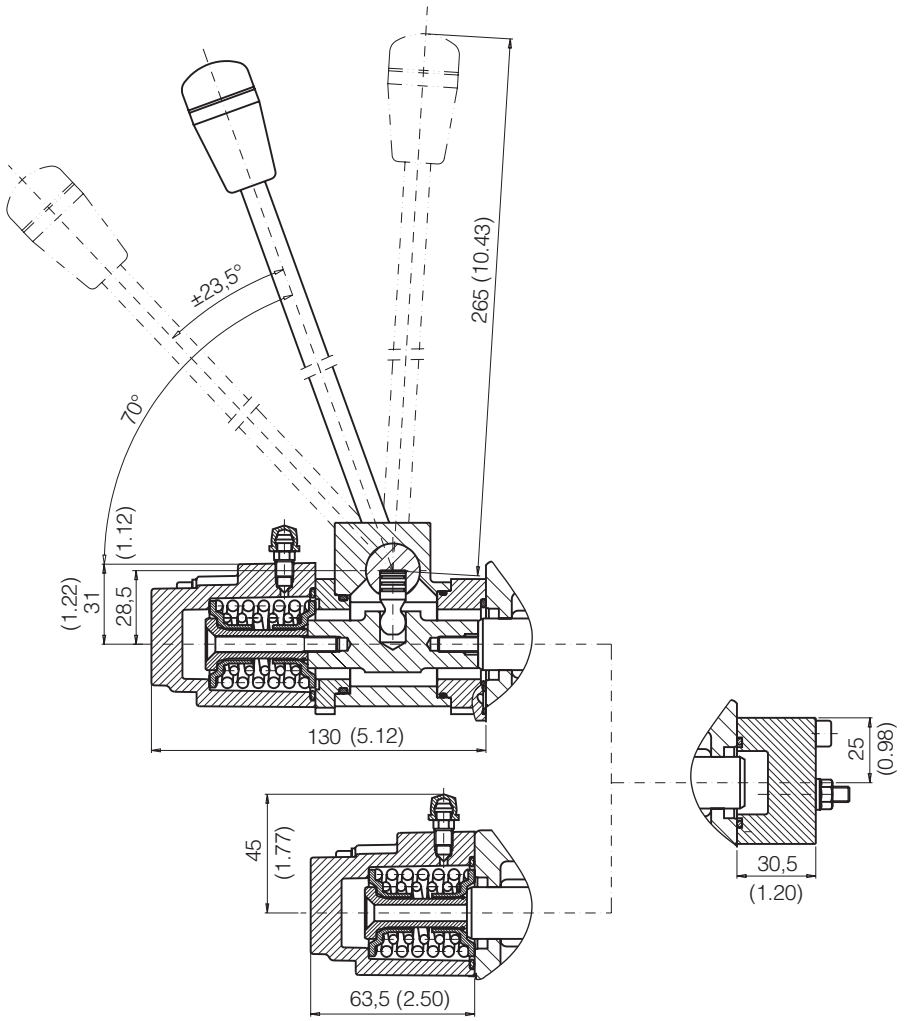

No. of sections	L1 mm (in)	L2 mm (in)	L3 mm (in)
1	211 (8.31)	185 (7.28)	141 (5.55)
2	266 (10.47)	240 (9.45)	196 (7.72)
3	321 (12.64)	295 (11.61)	251 (9.88)
4	376 (14.80)	350 (13.78)	306 (12.04)

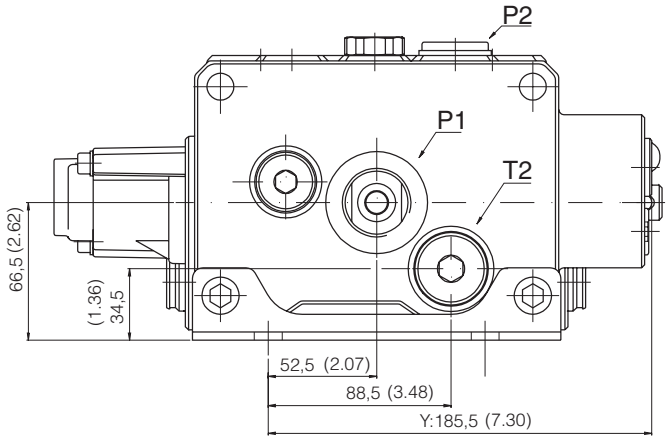

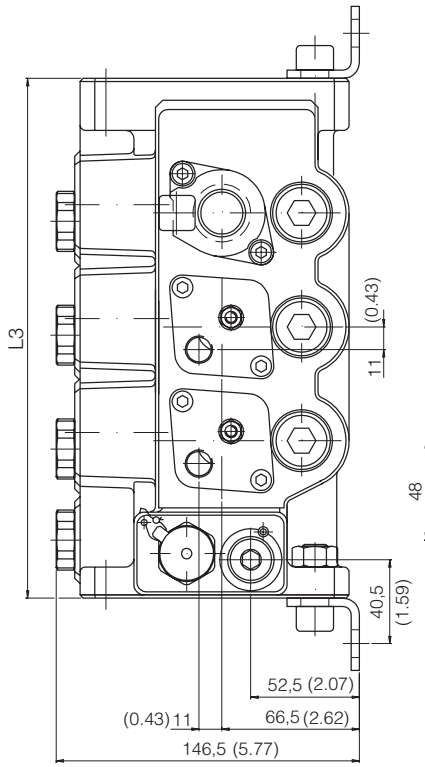

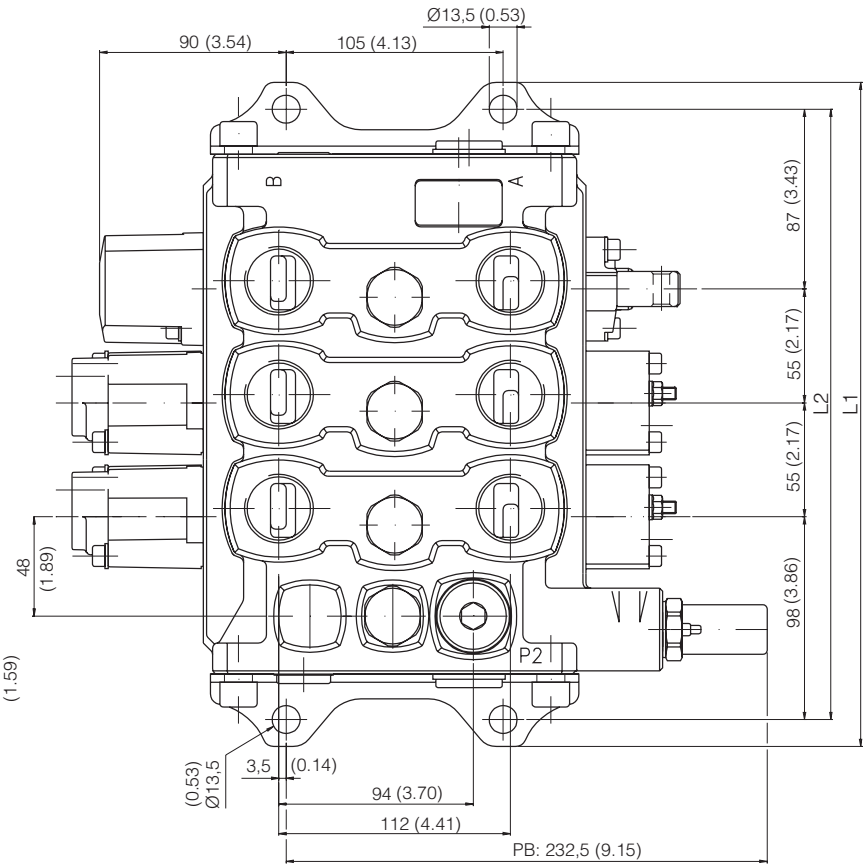

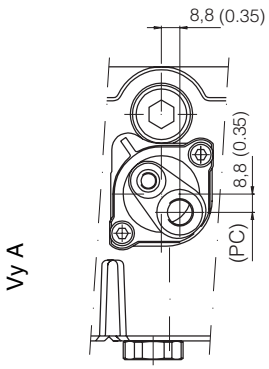

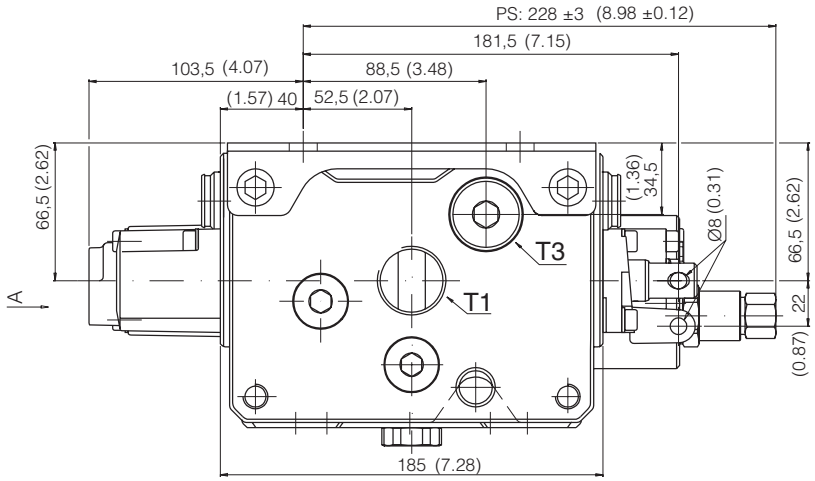

⚠ WARNING

FAILURE OR IMPROPER SELECTION OR IMPROPER USE OF THE PRODUCTS AND/OR SYSTEMS DESCRIBED HEREIN OR RELATED ITEMS CAN CAUSE DEATH, PERSONAL INJURY AND PROPERTY DAMAGE.

This document and other information from Parker Hannifin Corporation, its subsidiaries and authorized distributors provide product and/or system options for further investigation by users having technical expertise. It is important that you analyze all aspects of your application, including consequences of any failure, and review the information concerning the product or system in the current product catalogue. Due to the variety of operating conditions and applications for these products or systems, the user, through its own analysis and testing, is solely responsible for making the final selection of the products and systems and assuring that all performance, safety and warning requirements of the application are met.

The products described herein, including without limitation, product features, specifications, designs, availability and pricing, are subject to change by Parker Hannifin Corporation and its subsidiaries at any time without notice.

Offer of Sale

Please contact your Parker representation for a detailed ”Offer of Sale”.

Hydraulics Group Sales Offices

Europe

Austria
Wiener Neustadt
Tel: +43 (0)2622 23501
Fax: +43 (0)2622 66212

Belgium
Nivelles
Tel: +32 (0)67 280 900
Fax: +32 (0)67 280 999

Czech Republic
Klecany
Tel: +420 284 083 111
Fax: +420 284 083 112

Denmark
Ballerup
Tel: +45 4356 0400
Fax: +45 4373 8431

Finland
Vantaa
Tel: +358 (0)9 4767 31
Fax: +358 (0)9 4767 3200

France
Contamine-sur-Arve
Tel: +33 (0)450 25 80 25
Fax: +33 (0)450 03 67 37

Germany
Kaarst
Tel: +49 (0)2131 4016 0
Fax: +49 (0)2131 4016 9199

Hungary
Budapest
Tel: +36 (06)1 220 4155
Fax: +36 (06)1 422 1525

Ireland
Dublin
Tel: +353 (0)1 293 9999
Fax: +353 (0)1 293 9900

Italy
Corsico (MI)
Tel: +39 02 45 19 21
Fax: +39 02 4 47 93 40

The Netherlands
Oldenzaal
Tel: +31 (0)541 585000
Fax: +31 (0)541 585459

Norway
Ski
Tel: +47 64 91 10 00
Fax: +47 64 91 10 90

Poland
Warsaw
Tel: +48 (0)22 863 49 42
Fax: +48 (0)22 863 49 44

Portugal
Leca da Palmeira
Tel: +351 22 9997 360
Fax: +351 22 9961 527

Slovakia
Ref. Czech Republic

Spain
Madrid
Tel: +34 91 675 73 00
Fax: +34 91 675 77 11

Sweden
Spånga
Tel: +46 (0)8 597 950 00
Fax: +46 (0)8 597 951 10

Turkey
Merter/Istanbul
Tel.: +90 212 482 91 06 or 07
Fax: +90 212 482 91 10

United Kingdom
Warwick
Tel: +44 (0)1926 317 878
Fax: +44 (0)1926 317 855

International

Australia
Castle Hill
Tel: +61 (0)2-9634 7777
Fax: +61 (0)2-9899 6184

Canada
Milton, Ontario
Tel: +1 905-693-3000
Fax: +1 905-876-0788

China
Beijing
Tel: +86 10 6561 0520
Fax: +86 10 6561 0526

Asia Pacific Group
Hong Kong, Kowloon
Tel: +852 2428 8008
Fax: +852 2425 6896

India
Mumbai
Tel: +91 22 7907081
Fax: +91 22 7907080

Japan
Tokyo
Tel: +(81) 3 6408 3900
Fax: +(81) 3 5449 7201

Latin America Group
Brazil
Tel: +55 12 3954-5100
Fax: +55 12 3954-5266

South Africa
Kempton Park
Tel: +27 (0)11-961 0700
Fax: +27 (0)11-392 7213

USA
Cleveland (industrial)
Tel: +1 216-896-3000
Fax: +1 216-896-4031
Lincolnshire (mobile)
Tel: +1 847-821-1500
Fax: +1 847-821-7600

Parker Hannifin is the world's premier supplier of motion and control systems and solutions, with sales and manufacturing facilities throughout the world. For product information and details of your nearest Parker sales office, visit us at www.parker.com or call free on 00800 2727 5374.

Catalogue HY17-8545/UK
PDF 07/05