aerospace
climate control
electromechanical
filtration
fluid & gas handling
hydraulics
pneumatics
process control
sealing & shielding

# P3TJ Dry Air System

## Totally clean and dry compressed air

Catalogue PDE2602TCUK August 2015

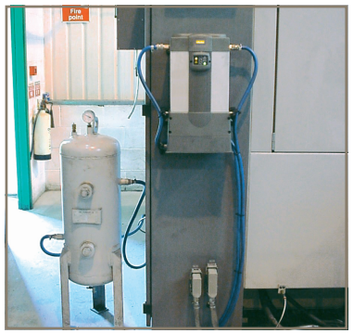

Parker

ENGINEERING YOUR SUCCESS.

# P3TJ Dry Air System

## The Problem

Compressed air is an essential power source that is widely used throughout industry. This safe, powerful and reliable utility can be the most important part of your production process.

However, your compressed air will contain water, dirt, wear particles and even degraded lubricating oil which all mix together to form an unwanted condensate. This condensate often acidic, rapidly wears tools and pneumatic machinery, blocks valves and orifices causing high maintenance and costly air leaks. It also corrodes piping systems and can bring your production process to an extremely expensive standstill!

The use of high efficiency compressed air filters fitted with condensate drains will remove the oil, water and dirt particles to eliminate the abrasive sludge in the compressed air system.

In many cases this action alone is not enough, as modern production systems and processes demand an even higher level of air quality. Where required, “point of use” desiccant air dryers can provide the correct air quality, without the need for drying the complete compressed air installation, which can be both costly and totally unneccessary.

## The Efficient Solution

The Parker P3TJ Dry Air System range of desiccant air dryers, offers the user uncompromised performance from a dedicated “point of use” Clean Dry Air system. It is easy to install and will transform an ordinary process into a highly reliable and efficient production operation.

The P3TJ Dry Air System has been designed with “quick change” filter, dryer combi-cartridges and in-line air connections to facilitate easy maintenance.

The P3TJ Dry Air System totally cleans and dries compressed air down to –40°C (–40°F) pressure dewpoint.

For critical applications, a pressure dewpoint of –70°C (–100°F) is achievable.

The principles of the P3TJ Dry Air System are based upon well proven concepts which embody true innovation and excellent value for money with technically superior yet simple design, while leading the way in compressed air drying.

**WARNING**

FAILURE OR IMPROPER SELECTION OR IMPROPER USE OF THE PRODUCTS AND/OR SYSTEMS DESCRIBED HEREIN OR RELATED ITEMS CAN CAUSE DEATH, PERSONAL INJURY AND PROPERTY DAMAGE.
This document and other information from Parker Hannifin Corporation, its subsidiaries and authorized distributors provide product and/or system options for further investigation by users having technical expertise. It is important that you analyze all aspects of your application and review the information concerning the product or system in the current product catalog. Due to the variety of operating conditions and applications for these products or systems, the user, through its own analysis and testing, is solely responsible for making the final selection of the products and systems and assuring that all performance, safety and warning requirements of the application are met. The products described herein, including without limitation, product features, specifications, designs, availability and pricing, are subject to change by Parker Hannifin Corporation and its subsidiaries at any time without notice.

**SALE CONDITIONS**

The items described in this document are available for sale by Parker Hannifin Corporation, its subsidiaries or its authorized distributors. Any sale contract entered into by Parker will be governed by the provisions stated in Parker's standard terms and conditions of sale (copy available upon request).

Prevents unnecessary downtime.

Increases product output by reducing plant downtime.

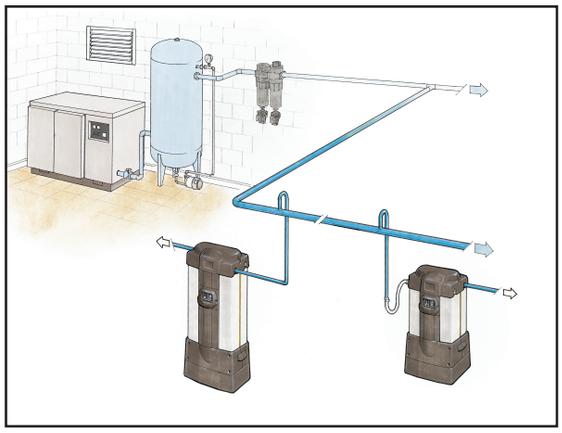

# The Benefits are obvious

- **Point Of Use Application.**
  Bringing Clean Dry Air just where you need it.
- **Approved to International Standards**
  Designed in accordance with ASME VIII Div.1, approved to CSA/UL/CRN and fully CE Marked (PED, EMC, LVD) as standard.
- **Simple to install**
  Flexible installation utilising the multiple in-line inlet & outlet connection ports.
- **Compact and lightweight.**
  Can be Floor, Bench or Wall/Canopy mounted.
- **Very Quiet Operation.**
  Noise level less than 70dB(A).
- **Can be installed almost anywhere.**
  IP66 / NEMA 4 protection as standard.
- **Audible alarm.**
  Indicating Service interval for optimal performance.
- **Simple & easy to maintain.**
  A 100% service can be achieved insitu in under 15 minutes due to the quick release top cap arrangement, which does NOT require the inlet / outlet ports to be disconnected as with traditional systems.

**The P3TJ Dry Air System, is the reliable, cost effective and flexible way to provide Clean Dry Air exactly where needed.**

Easy desiccant cartridge replacement

Seven models in range

# Features

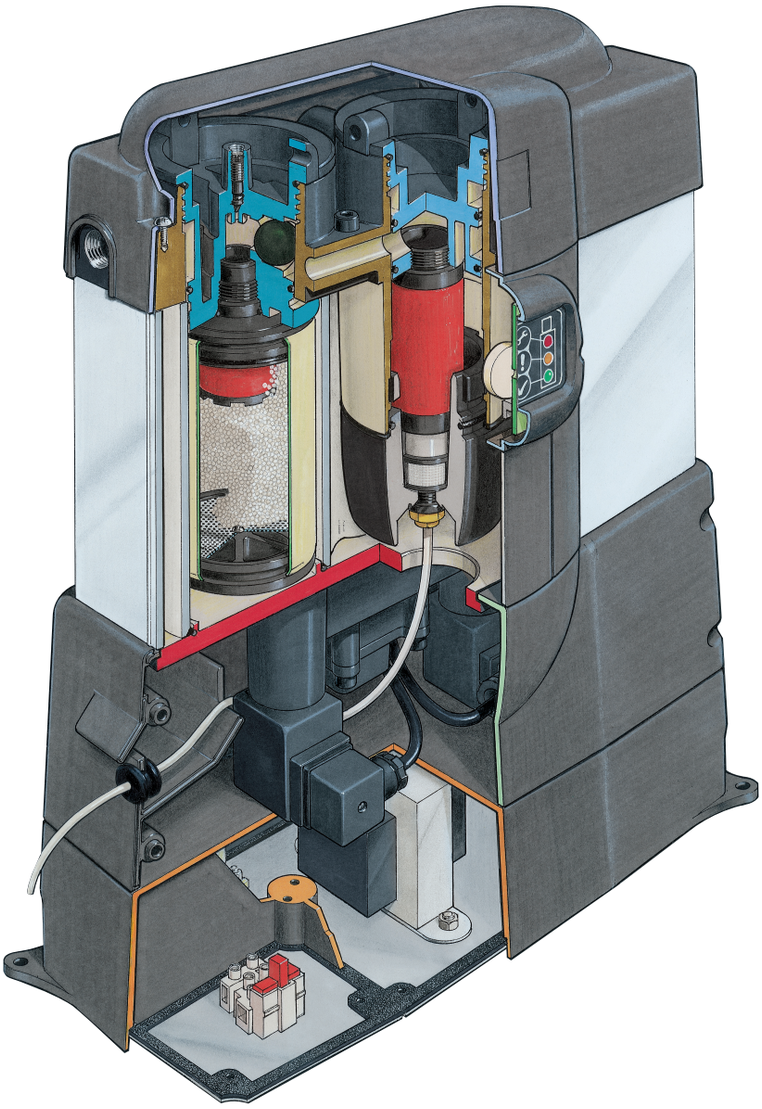

ISO7000 inlet & outlet symbols cast into the top cover ensure correct piping installation.

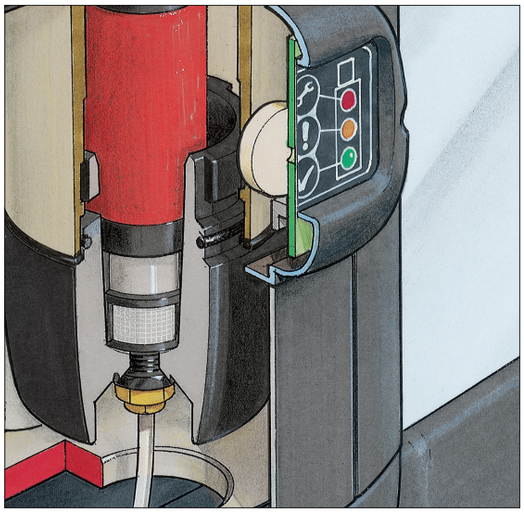

Integral 0.01µm high efficiency filter.

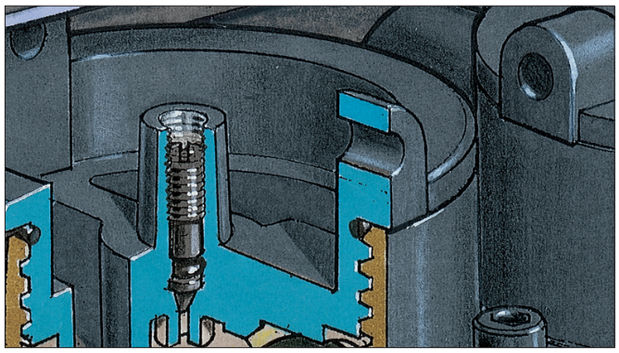

Top End Repressurisation – ensuring uninterrupted compressed air at all times.

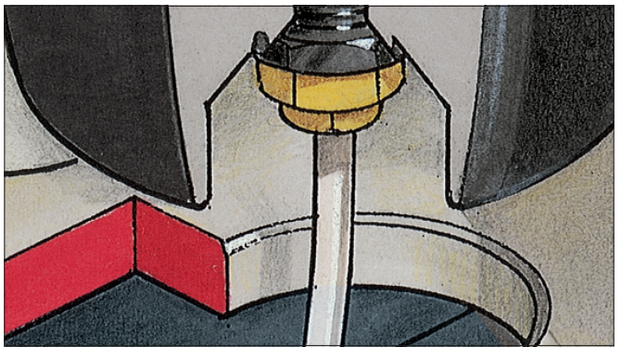

Positive removal of prefilter condensate by piping away for remote collection.

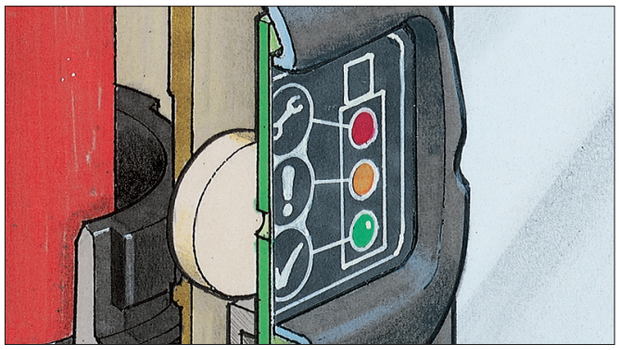

Electronic display providing high visibility LED indication with an internal audible alarm.

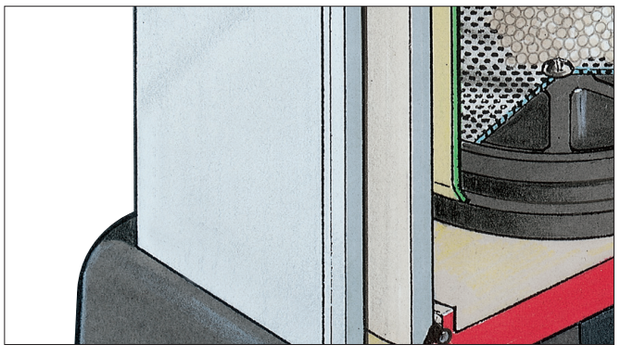

Patented high tensile extruded aluminium column with twin drying chambers.

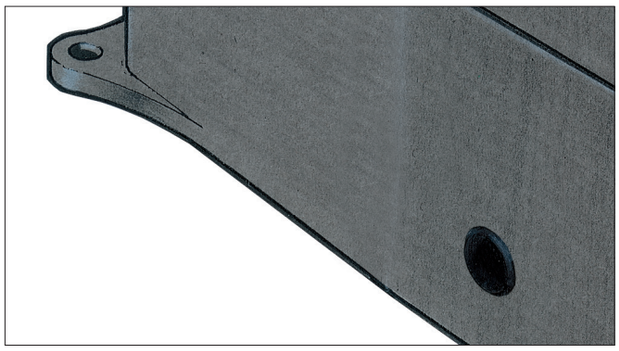

Alarm reset facility to cancel the audible alarm for 24 hours while replacement components are sourced.

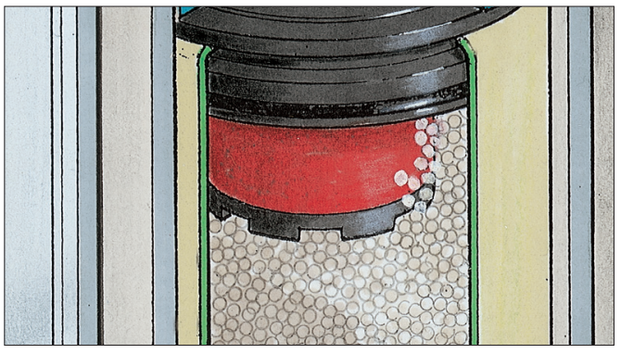

One Combi-Cartridge per column containing DRYFIL® MS desiccant and a 1µm particulate filter.

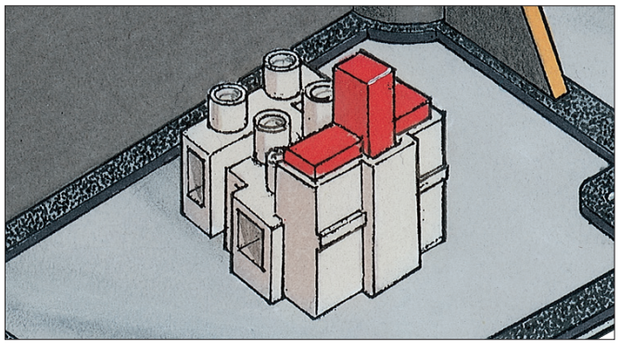

Easy access to electronic control box for mains connection.

Corrosion protected by alocrom and epoxy painting.

# Optional Features

- For totally quiet operation, the regeneration exhaust air can be positively piped away.
- Remote indication provides a warning of the dryers need for servicing. (Audible alarm not included)
- Wall mounting kit for vertically securing the dryer to a wall or canopy.

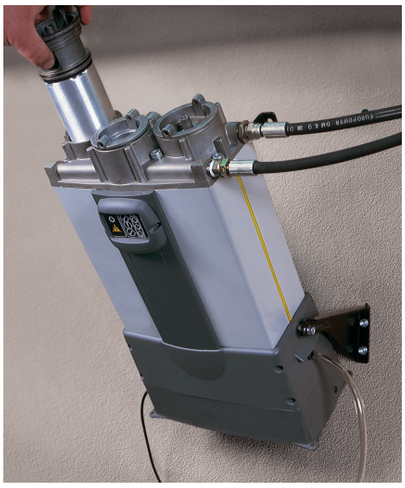

Tilt mounting kit facilitates easy cartridge replacement

A 45° tilt, wall mounting kit is also available for vertically securing the dryer to a wall, canopy or inside a customers product where access to the top of the dryer is restricted.

- In conditions of limited access, the electronic control box (base) can be detached and relocated remotely from the dryer.

Electronic control box can be remotely located

# Product Applications

The P3TJ Dry Air System will benefit users who have a specific need for Clean Dry Air (CDA) directly after a compressor, or for a particular application where the air is critical to the operating process or end product.

P3TJ Dry Air System installed to supply control air for a CNC machining centre

## Typical Applications:

- Computer Numerical Control (CNC) Machines
- Co-ordinate Measuring Machines
- Laboratories
- Lasers
- Packaging Machines
- Instrumentation
- Processing equipment
- Conveying Machines

# Operation

**1**

Compressed air enters the integral pre-filter and passes into the left hand chamber (Column A) where the air is dried before passing to the application.

A small amount of dry purge air is used to regenerate the right hand chamber (Column B) which is wet, using the PSA (Pressure Swing Adsorption) method of regeneration, venting the saturated air to atmosphere under pressure. The same regeneration air is also used to “back flush” the integral filter to prolong its working life.

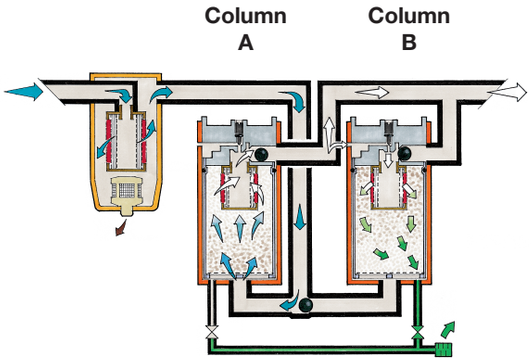


**2**

Prior to changeover, the right hand chamber (Column B) enters repressurisation where the exhaust valve is closed to allow pressure to increase.

This process ensures a smooth uninterrupted changeover, preventing the loss of any system pressure, before the process repeats itself.

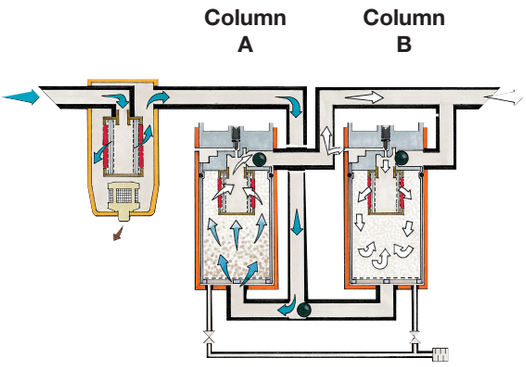


# Service Indication Sequence & Alarm

During operation, The P3TJ Dry Air System Power On (yellow) LED and Check (Green) LED indicators will illuminate, remaining in this configuration for 11500 hours. At this time, the Warning (Yellow) LED will illuminate and cancel the Check (Green) LED. This signals the user to order service replacement components at the optimum time.

500 hours later (a total of 12000 hours from initial start up) the Service (Red) LED will illuminate and cancel the Warning (Yellow) LED, the Audible Alarm housed inside the display will sound intermittently (every 6 seconds) drawing attention to the need for a service.

# Selection Criteria

To correctly select the dryer best suited for your application, the following details are required to ensure optimum performance and trouble free operation.

- **Maximum Inlet Flow.**
- **Minimum Inlet Pressure.**
- **Maximum Inlet Temperature.**

Once these operating parameters have been established, you can select the most economical P3TJ Dry Air System for your application.

# Technical Specifications

| | | |
|---|---|---|
| **Flow Range:** | | 85 L/min to 567 L/min at 7 bar |
| **Minimum Operating Pressure:** | | 4 bar |
| **Maximum Operating Pressure:** | | 12 bar |
| **Minimum Operating Temperature:** | | 1.5°C |
| **Maximum Inlet Temperature:** | | 50°C |
| **Noise Level (Average):** | | ≤ 70dB(A) |
| **Pressure Dewpoint** | **(Standard):** | -40°C pdp |
| | **(Optional):** | -70°C pdp |
| **Standard Electrical Supply:+** | | 230/1ph/50Hz (Tolerance +/- 10%) |
| | | 115/1ph/60Hz (Tolerance +/- 10%) |
| **Controls:** | | Electronic Control Timer |
| **Inlet Connections:** | | G3/8* |
| **Outlet Connections:** | | G3/8* |

# Order Code

| P3 | T | J | A | Thread Type | | 3 | A | Size | Supply Voltage | | N |
|---|---|---|---|---|---|---|---|---|---|---|---|
| | | | | 1 | (BSPP) | | | 1 | A | (230 V AC) | |
| | | | | 9 | (NPT) | | | 2 | C | (24 V AC) | |
| | | | | | | | | 3 | J | (110 V AC) | |
| | | | | | | | | 4 | | | |
| | | | | | | | | 5 | | | |
| | | | | | | | | 6 | | | |
| | | | | | | | | 7 | | Standard Options | |

# Standard nominal flow rate qnN (NL/min) at pressure dew point -40°C

| Model | Port Size | Max inlet temperature | Inlet Pressure (bar) | | | | | | | | |
|---|---|---|---|---|---|---|---|---|---|---|---|
| | | | 4 | 5 | 6 | 7 | 8 | 9 | 10 | 11 | 12 |
| P3TJA13A1AN | 3/8” | 20°C | 53 | 63 | 75 | 85 | 82 | 92 | 100 | 110 | 118 |
| | 3/8” | 35°C | 33 | 47 | 66 | 85 | 80 | 99 | 118 | 142 | 165 |
| | 3/8” | 40°C | 32 | 46 | 64 | 82 | 77 | 97 | 114 | 138 | 160 |
| | 3/8” | 45°C | 29 | 42 | 58 | 75 | 70 | 87 | 104 | 125 | 145 |
| | 3/8” | 50°C | 24 | 35 | 48 | 62 | 58 | 73 | 86 | 103 | 142 |
| P3TJA13A2AN | 3/8” | 20°C | 90 | 107 | 125 | 142 | 137 | 153 | 167 | 183 | 198 |
| | 3/8” | 35°C | 57 | 80 | 110 | 142 | 133 | 165 | 197 | 236 | 277 |
| | 3/8” | 40°C | 55 | 78 | 106 | 138 | 129 | 161 | 190 | 229 | 269 |
| | 3/8” | 45°C | 50 | 71 | 96 | 125 | 116 | 145 | 174 | 209 | 244 |
| | 3/8” | 50°C | 41 | 59 | 80 | 104 | 97 | 121 | 144 | 172 | 238 |
| P3TJA13A3AN | 3/8” | 20°C | 143 | 170 | 200 | 277 | 220 | 245 | 267 | 292 | 317 |
| | 3/8” | 35°C | 90 | 128 | 176 | 227 | 213 | 265 | 315 | 377 | 444 |
| | 3/8” | 40°C | 87 | 124 | 170 | 220 | 207 | 257 | 304 | 365 | 431 |
| | 3/8” | 45°C | 79 | 112 | 154 | 200 | 187 | 233 | 278 | 333 | 390 |
| | 3/8” | 50°C | 66 | 94 | 128 | 166 | 156 | 194 | 230 | 274 | 380 |
| P3TJA13A4AN | 3/8” | 20°C | 178 | 213 | 250 | 283 | 275 | 307 | 335 | 365 | 397 |
| | 3/8” | 35°C | 112 | 160 | 220 | 283 | 267 | 332 | 395 | 471 | 556 |
| | 3/8” | 40°C | 109 | 155 | 213 | 275 | 259 | 322 | 382 | 456 | 540 |
| | 3/8” | 45°C | 98 | 141 | 193 | 249 | 234 | 292 | 348 | 416 | 488 |
| | 3/8” | 50°C | 82 | 117 | 160 | 207 | 195 | 243 | 288 | 343 | 476 |
| P3TJA13A5AN | 3/8” | 20°C | 232 | 277 | 323 | 368 | 357 | 398 | 435 | 475 | 515 |
| | 3/8” | 35°C | 146 | 208 | 284 | 368 | 346 | 430 | 513 | 613 | 721 |
| | 3/8” | 40°C | 142 | 202 | 275 | 357 | 336 | 418 | 496 | 594 | 700 |
| | 3/8” | 45°C | 128 | 183 | 249 | 324 | 303 | 378 | 452 | 542 | 633 |
| | 3/8” | 50°C | 107 | 152 | 207 | 269 | 253 | 314 | 374 | 447 | 618 |
| P3TJA13A6AN | 3/8” | 20°C | 268 | 318 | 373 | 425 | 412 | 458 | 502 | 548 | 595 |
| | 3/8” | 35°C | 169 | 239 | 328 | 425 | 400 | 495 | 592 | 707 | 833 |
| | 3/8” | 40°C | 163 | 232 | 317 | 412 | 387 | 481 | 572 | 685 | 809 |
| | 3/8” | 45°C | 147 | 210 | 287 | 374 | 350 | 435 | 522 | 625 | 732 |
| | 3/8” | 50°C | 123 | 175 | 239 | 310 | 293 | 362 | 432 | 515 | 714 |
| P3TJA13A7AN | 3/8” | 20°C | 357 | 425 | 498 | 567 | 550 | 612 | 668 | 732 | 793 |
| | 3/8” | 35°C | 225 | 319 | 438 | 567 | 534 | 661 | 788 | 944 | 1110 |
| | 3/8” | 40°C | 218 | 310 | 423 | 550 | 517 | 643 | 762 | 915 | 1078 |
| | 3/8” | 45°C | 196 | 281 | 383 | 499 | 468 | 581 | 695 | 834 | 975 |
| | 3/8” | 50°C | 164 | 234 | 319 | 414 | 391 | 483 | 574 | 688 | 952 |

# Weights and Dimensions

| Model | Dimensions mm (ins) A | Weight kg (lbs) |
|---|---|---|
| **P3TJA13A1AN** | 422 (16.6) | 11 (24.2) |
| **P3TJA13A2AN** | 500 (19.7) | 13 (28.7) |
| **P3TJA13A3AN** | 616 (24.2) | 16 (35.3) |
| **P3TJA13A4AN** | 692 (27.2) | 18 (39.7) |
| **P3TJA13A5AN** | 847 (33.3) | 20 (44.1) |
| **P3TJA13A6AN** | 906 (35.7) | 23 (50.7) |
| **P3TJA13A7AN** | 1098 (43.2) | 28 (61.7) |

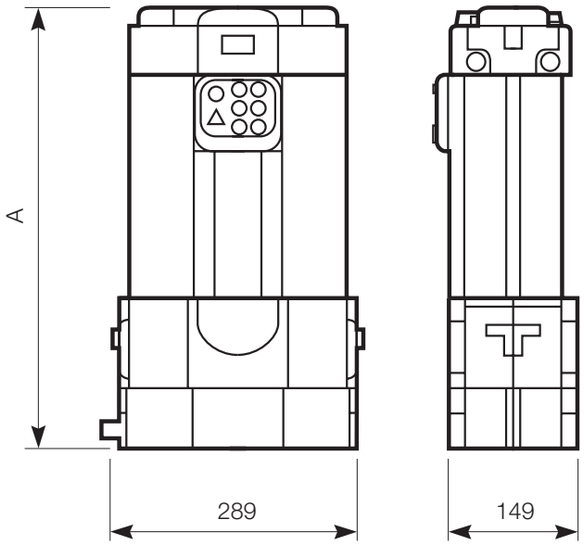


# Maintenance Kits

| Model | Maintenance Kit |
|---|---|
| P3TJA13A1AN | **P3TKA00JA1** |
| P3TJA13A2AN | **P3TKA00JA2** |
| P3TJA13A3AN | **P3TKA00JA3** |
| P3TJA13A4AN | **P3TKA00JA4** |
| P3TJA13A5AN | **P3TKA00JA5** |
| P3TJA13A6AN | **P3TKA00JA6** |
| P3TJA13A7AN | **P3TKA00JA7** |

# Fixing Kits

| Description | Kit |
|---|---|
| Fixed Wall Mounting Bracket | **P3TKA00MJ** |
| 45° Tilt Wall Mounting Bracket | **P3TKA00MK** |

# ISO 8573 - Compressed air quality standards

ISO 8573 is the group of International standards relating to the quality of compressed air and consists of nine separate parts. Part 1 specifies the quality requirements of the compressed air and parts 2 - 9 specify the methods of testing for a range of contaminants.

ISO 8573.1 : 2001 is the primary document used from the ISO 8573 series and it is this document which allows the user to specify the air quality or purity required at key points in a compressed air system.

Within ISO 8573.1 : 2001 purity levels for the main contaminants are shown in separate tables, however for ease of use, this document combines all three into one easy to understand table.

| Purity | Solid Particulat | | | | | Water | | Oil |
|---|---|---|---|---|---|---|---|---|
| | Maximum number of particles per $m^3$ | | | Particle Size | Concentration | Vapour | Liquid | Total oil (aerosol, liquid and vapour) |
| Class | 0.1 - 0.5 micron | 0.5 - 1 micron | 1 - 5 micron | micron | $mg/m^3$ | Pressure Dewpoint | $g/m^3$ | $mg/m^3$ |
| 0 | * | * | * | * | * | * | * | * |
| 1 | 100 | 1 | 0 | - | - | -70°C | - | 0.01 |
| 2 | 100,000 | 1,000 | 10 | - | - | -40°C | - | 0.1 |
| 3 | - | 10,000 | 500 | - | - | -20°C | - | 1 |
| 4 | - | - | 1,000 | - | - | +3°C | - | 5 |
| 5 | - | - | 20,000 | - | - | +7°C | - | - |
| 6 | - | - | - | 5 | 5 | +10°C | - | - |
| 7 | - | - | - | 40 | 10 | - | 0,5 | - |
| 8 | - | - | - | - | - | - | 5 | - |
| 9 | - | - | - | - | - | - | 10 | - |

* As specified by the equipment user or supplier

## Specifying air purity in accordance with ISO 8573.1 : 2001

When specifying the purity of air required, the standard must always be referenced, followed by the purity class selected for each contaminant (a different purity class can be selected for each contaminant if required). An example of how to write an air quality specification is shown below :

**ISO 8573.1 : 2001 Class 1.2.1**
ISO8573.1 : 2001 refers to the standard document and its revision, the three digits refer to the purity classifications selected for solid particulate, water and total oil. Selecting an air purity class of 1.2.1 would specify the following air quality when operating at the standard's reference conditions:

**Class 1 Particulate**
In each cubic metre of compressed air, no more than 100 particles in the 0.1 - 0.5 micron size range are allowed
In each cubic metre of compressed air, no more than 1 particle in the 0.5 - 1 micron size range is allowed
In each cubic metre of compressed air, no particles in the 1 - 5 micron size range are allowed

**Class 2 Water**
A pressure dewpoint of -40°C or better is required and no liquid water is allowed.

**Class 1 Oil**
In each cubic metre of compressed air, not more than 0.01mg of oil is allowed. This is a combined level for both oil aerosol and oil vapour.

## Cost effective system design

To achieve the stringent air quality levels required for today's modern production facilities, a careful approach to system design, commissioning and operation must be employed. Treatment at one point alone is not enough and it is highly recommended that the compressed air is treated prior to entry into the distribution system to a quality level suitable for protecting air receivers and distribution piping.

The following table highlights the Parker Extras filtration and drying products required to achieve each air purity classification shown in ISO 8573.1 : 2001.

Point of use purification should also be employed, with specific attention being focused on the application and the level of air quality required. This approach to system design ensures that air is not "over treated" and provides the most cost effective solution to high quality compressed air.

| ISO 8573.1:2001 Class | Solid Particulate | Water Vapour | Total Oil (Aerosol Liquid & Vapour) |
|---|---|---|---|
| 1 | Coalescing Grade 1µm filter + Grade 0.01µm filter + Sterile filter | Adsorption Dryer -70°C PDP | Coalescing Grade 0.01µm filter + Grade 1µm filter + Vapour removal filter |
| 2 | Coalescing Grade 1µm filter + Grade 0.01µm filter | Adsorption Dryer -40°C PDP | Coalescing Grade 0.01µm filter + Grade 1µm filter |
| 3 | Coalescing Grade 1µm filter | | Coalescing Grade 1µm filter |

# Parker Worldwide

## Europe, Middle East, Africa

**AE – United Arab Emirates,** Dubai
Tel: +971 4 8127100
parker.me@parker.com

**AT – Austria,** Wiener Neustadt
Tel: +43 (0)2622 23501-0
parker.austria@parker.com

**AT – Eastern Europe,** Wiener Neustadt
Tel: +43 (0)2622 23501 900
parker.easteurope@parker.com

**AZ – Azerbaijan,** Baku
Tel: +994 50 2233 458
parker.azerbaijan@parker.com

**BE/LU – Belgium,** Nivelles
Tel: +32 (0)67 280 900
parker.belgium@parker.com

**BG – Bulgaria,** Sofia
Tel: +359 2 980 1344
parker.bulgaria@parker.com

**BY – Belarus,** Minsk
Tel: +375 17 209 9399
parker.belarus@parker.com

**CH – Switzerland,** Etoy
Tel: +41 (0)21 821 87 00
parker.switzerland@parker.com

**CZ – Czech Republic,** Klecany
Tel: +420 284 083 111
parker.czechrepublic@parker.com

**DE – Germany,** Kaarst
Tel: +49 (0)2131 4016 0
parker.germany@parker.com

**DK – Denmark,** Ballerup
Tel: +45 43 56 04 00
parker.denmark@parker.com

**ES – Spain,** Madrid
Tel: +34 902 330 001
parker.spain@parker.com

**FI – Finland,** Vantaa
Tel: +358 (0)20 753 2500
parker.finland@parker.com

**FR – France,** Contamine s/Arve
Tel: +33 (0)4 50 25 80 25
parker.france@parker.com

**GR – Greece,** Athens
Tel: +30 210 933 6450
parker.greece@parker.com

**HU – Hungary,** Budaörs
Tel: +36 23 885 470
parker.hungary@parker.com

**IE – Ireland,** Dublin
Tel: +353 (0)1 466 6370
parker.ireland@parker.com

**IT – Italy,** Corsico (MI)
Tel: +39 02 45 19 21
parker.italy@parker.com

**KZ – Kazakhstan,** Almaty
Tel: +7 7273 561 000
parker.easteurope@parker.com

**NL – The Netherlands,** Oldenzaal
Tel: +31 (0)541 585 000
parker.nl@parker.com

**NO – Norway,** Asker
Tel: +47 66 75 34 00
parker.norway@parker.com

**PL – Poland,** Warsaw
Tel: +48 (0)22 573 24 00
parker.poland@parker.com

**PT – Portugal,** Leca da Palmeira
Tel: +351 22 999 7360
parker.portugal@parker.com

**RO – Romania,** Bucharest
Tel: +40 21 252 1382
parker.romania@parker.com

**RU – Russia,** Moscow
Tel: +7 495 645-2156
parker.russia@parker.com

**SE – Sweden,** Spånga
Tel: +46 (0)8 59 79 50 00
parker.sweden@parker.com

**SL – Slovenia,** Novo Mesto
Tel: +386 7 337 6650
parker.slovenia@parker.com

**TR – Turkey,** Istanbul
Tel: +90 216 4997081
parker.turkey@parker.com

**UA – Ukraine,** Kiev
Tel: +380 44 494 2731
parker.poland@parker.com

**UK – United Kingdom,** Warwick
Tel: +44 (0)1926 317 878
parker.uk@parker.com

**ZA – South Africa,** Kempton Park
Tel: +27 (0)11 961 0700
parker.southafrica@parker.com

## North America

**CA – Canada,** Milton, Ontario
Tel: +1 905 693 3000

**US – USA,** Cleveland
Tel: +1 216 896 3000

## Asia Pacific

**AU – Australia,** Castle Hill
Tel: +61 (0)2-9634 7777

**CN – China,** Shanghai
Tel: +86 21 2899 5000

**HK – Hong Kong**
Tel: +852 2428 8008

**IN – India,** Mumbai
Tel: +91 22 6513 7081-85

**JP – Japan,** Tokyo
Tel: +81 (0)3 6408 3901

**KR – South Korea,** Seoul
Tel: +82 2 559 0400

**MY – Malaysia,** Shah Alam
Tel: +60 3 7849 0800

**NZ – New Zealand,** Mt Wellington
Tel: +64 9 574 1744

**SG – Singapore**
Tel: +65 6887 6300

**TH – Thailand,** Bangkok
Tel: +662 186 7000

**TW – Taiwan,** Taipei
Tel: +886 2 2298 8987

## South America

**AR – Argentina,** Buenos Aires
Tel: +54 3327 44 4129

**BR – Brazil,** Sao Jose dos Campos
Tel: +55 12 4009 3500

**CL – Chile,** Santiago
Tel: +562 2303 9640

**MX – Mexico,** Toluca
Tel: +52 72 2275 4200

**European Product Information Centre**
**Free phone: 00 800 27 27 5374**
**(from AT, BE, CH, CZ, DE, DK, EE, ES, FI, FR, IE, IL, IS, IT, LU, MT, NL, NO, PL, PT, RU, SE, SK, UK, ZA)**

© 2015 Parker Hannifin Corporation. All rights reserved.

Catalogue PDE2602TCUK - V2 - August 2015

**Parker Hannifin Ltd.**
Tachbrook Park Drive
Tachbrook Park,
Warwick, CV34 6TU
United Kingdom
Tel.: +44 (0) 1926 317 878
Fax: +44 (0) 1926 317 855
parker.uk@parker.com
www.parker.com

Your local authorized Parker distributor